Smarter. Greener. Together.

Industrial Automation Headquarters

Delta Electronics, Inc.
Taoyuan Technology Center
No.18, Xinglong Rd., Taoyuan City,
Taoyuan County 33068, Taiwan
TEL: 886-3-362-6301 / FAX: 886-3-371-6301

Asia

Delta Electronics (Jiangsu) Ltd.
Wujiang Plant 3
1688 Jiangxing East Road,
Wujiang Economic Development Zone
Wujiang City, Jiang Su Province,
People's Republic of China (Post code: 215200)
TEL: 86-512-6340-3008 / FAX: 86-769-6340-7290

Delta Greentech (China) Co., Ltd.
238 Min-Xia Road, Pudong District,
ShangHai, P.R.C.
Post code : 201209
TEL: 86-21-58635678 / FAX: 86-21-58630003

Delta Electronics (Japan), Inc.
Tokyo Office
2-1-14 Minato-ku Shibadaimon,
Tokyo 105-0012, Japan
TEL: 81-3-5733-1111 / FAX: 81-3-5733-1211

Delta Electronics (Korea), Inc.
1511, Byucksan Digital Valley 6-cha, Gasan-dong,
Geumcheon-gu, Seoul, Korea, 153-704
TEL: 82-2-515-5303 / FAX: 82-2-515-5302

Delta Electronics Int'l (S) Pte Ltd
4 Kaki Bukit Ave 1, #05-05, Singapore 417939
TEL: 65-6747-5155 / FAX: 65-6744-9228

Delta Electronics (India) Pvt. Ltd.
Plot No 43 Sector 35, HSIIDC
Gurgaon, PIN 122001, Haryana, India
TEL : 91-124-4874900 / FAX : 91-124-4874945

Americas

Delta Products Corporation (USA)
Raleigh Office
P.O. Box 12173,5101 Davis Drive,
Research Triangle Park, NC 27709, U.S.A.
TEL: 1-919-767-3800 / FAX: 1-919-767-8080

Delta Greentech (Brasil) S.A
Sao Paulo Office
Rua Itapeva, 26 - 3° andar Edificio Itapeva One-Bela Vista
01332-000-São Paulo-SP-Brazil
TEL: +55 11 3568-3855 / FAX: +55 11 3568-3865

Europe

Delta Electronics (Netherlands) B.V.
Eindhoven Office
De Witbogt 20, 5652 AG Eindhoven, The Netherlands
TEL: +31 (0)40-8003800 / FAX: +31 (0)40-8003898

*We reserve the right to change the information in this catalogue without prior notice.

5014043601-C6E1-201612

Delta Vector Control Drive C2000 (690V) Series User Manual

Delta Vector Control Drive C2000 (690V) Series User Manual

www.deltaww.com

Smarter. Greener. Together.

PLEASE READ PRIOR TO INSTALLATION FOR SAFETY.

DANGER

- ☑ AC input power must be disconnected before any wiring to the AC motor drive is made.
- ☑ Even if the power has been turned off, a charge may still remain in the DC-link capacitors with hazardous voltages before the POWER LED is OFF. Please do not touch the internal circuit and components.
- ☑ There are highly sensitive MOS components on the printed circuit boards. These components are especially sensitive to static electricity. Please do not touch these components or the circuit boards before taking anti-static measures. Never reassemble internal components or wiring.
- ☑ Ground the AC motor drive using the ground terminal. The grounding method must comply with the laws of the country where the AC motor drive is to be installed.
- ☑ DO NOT install the AC motor drive in a place subjected to high temperature, direct sunlight and inflammables.

CAUTION

- ☑ Never connect the AC motor drive output terminals U/T1, V/T2 and W/T3 directly to the AC mains circuit power supply.
- ☑ Only qualified persons are allowed to install, wire and maintain the AC motor drives.
- ☑ Even if the 3-phase AC motor is stop, a charge may still remain in the main circuit terminals of the AC motor drive with hazardous voltages.
- ☑ If the AC motor drive is stored in no charge condition for more than 3 months, the ambient temperature should not be higher than 30 °C. Storage longer than one year is not recommended, it could result in the degradation of the electrolytic capacitors.
- ☑ Pay attention to the following when transporting and installing this package (including wooden crate, wood stave and carton box)
  1. If you need to sterilize, deform the wooden crate or carton box, please do not use steamed smoking sterilization or you will damage the VFD.
  2. Please use other ways to sterilize or deform.
  3. You may use high temperature to sterilize or deform. Leave the packaging materials in an environment of over 56℃ for 30 minutes.
  4. It is strictly forbidden to use steamed smoking sterilization. The warranty does not covered VFD damaged by steamed smoking sterilization.

NOTE

The content of this manual may be revised without prior notice. Please consult our distributors or download the latest version at http://www.deltaww.com/services/DownloadCenter2.aspx?secID=8&pid=2&tid=0&CID=06&itemID=060101&typeID=1&downloadID=&title=&dataType=&check=0&hl=en-US

Table of Contents

CHAPTER 1 INTRODUCTION.....1-1

1-1 Receiving and Inspection.....1-2
1-2 Nameplate Information.....1-2
1-3 Model Name.....1-3
1-4 Serial Number.....1-3
1-5 RFI Jumper.....1-4
1-6 Dimensions.....1-7

CHAPTER 2 INSTALLATION 2-1

CHAPTER 3 MOVING & UNPACKING 3-1

3-1 Unpacking.....3-2
3-2 The Lifting Hook.....3-13

CHAPTER 4 WIRING.....4-1

4-1 Wiring.....4-3
4-2 System Wiring Diagram.....4-9

CHAPTER 5 MAIN CIRCUIT TERMINALS 5-1

5-1 Main Circuit Diagram.....5-4
5-2 Main Circuit Terminals.....5-7

CHPATER 6 CONTROL TERMINALS.....6-1

6-1 Specifications of Control Terminal.....6-6
6-2 Remove the Terminal Block.....6-9

CHAPTER 7 OPTIONAL ACCESSORIES.....7-1

7-1 All Brake Resistors and Brake Units Used in AC Motor Drives.....7-2
7-2 Non-fuse Circuit Breaker.....7-5
7-3 Fuse Specification Chart 7-6
7-4 AC/DC Reactor.....7-7
7-5 Zero Phase Reactor.....7-14
7-6 EMC Filter.....7-19
7-7 Digital Keypad.....7-28
7-8 Panel Mounting.....7-32
7-9 Conduit Box Kit.....7-34
7-10 Fan Kit.....7-40
7-11 Flange Mounting Kit 7-51
7-12 USB/RS-485 Communication Interface IFD6530….....7-65

CHAPTER 8 OPTION CARDS.....8-1

8-1 Removed key cover.....8-2
8-2 Screws Specification for Option Card Terminals.....8-5
8-3 EMC-D42A.....8-7
8-4 EMC-D611A.....8-7
8-5 EMC-R6AA.....8-7
8-6 EMC-BPS01.....8-8
8-7 CMC-MOD01.....8-9
8-8 CMC-PD01.....8-13
8-9 CMC-DN01.....8-15
8-10 CMC-EIP01.....8-18
8-11 EMC-COP01.....8-23

CHAPTER 9 SPECIFICATION.....9-1

9-1 575V Series.....9-2
9-2 690V Series.....9-3
9-3 Environment for Operation, Storage and Transportation.....9-5
9-4 Specification for Operation Temperature and Protection Level.....9-6
9-5 Derating of Ambient Temperature and Altitude.....9-7

CHAPTER 10 DIGITAL KEYPAD 10-1

10-1 Descriptions of Digital Keypad 10-2
10-2 Function of Digital Keypad KPC-CC01.....10-5
10-3 TPEditor Installation Instruction 10-23
10-4 Fault Code Description of Digital Keypad KPC-CC01.....10-31
10-5 Functions not supported when using TPEditor with KPC-CC01.....10-35

CHAPTER 11 SUMMARPY OF PARAMETERS.....11-1

CHAPTER 12 DESCRIPTION OF PARAMETER SETTINGS 12-1

CHAPTER 13 WARNING CODES.....13-1

CHAPTER 14 FAULT CODES AND DESCRIPTIONS 14-1

CHAPTER 15 CANOPEN OVERVIEW.....15-1

CHAPTER 16 PLC FUNCTION 16-1

CHAPTER 17 SAFETY TORQUE OFF FUNCTION.....17-1

Application	**Control Board: V 1.01** **Keypad: V1.10**

Chapter 1 Introduction

1-1 Receiving and Inspection

1-2 Nameplate Information

1-3 Model Name

1-4 Serial Number

1-5 RFI Jumper

1-6 Dimensions

1-1 Receiving and Inspection

After receiving the AC motor drive, please check for the following:

1. Please inspect the unit after unpacking to assure it was not damaged during shipment. Make sure that the part number printed on the package corresponds with the part number indicated on the nameplate.
2. Make sure that the voltage for the wiring lie within the range as indicated on the nameplate. Please install the AC motor drive according to this manual.
3. Before applying the power, please make sure that all the devices, including power, motor, control board and digital keypad, are connected correctly.
4. When wiring the AC motor drive, please make sure that the wiring of input terminals “R/L1, S/L2, T/L3” and output terminals “U/T1, V/T2, W/T3” are correct to prevent drive damage.
5. When power is applied, select the language and set parameter groups via the digital keypad (KPC-CC01). When executes trial run, please begin with a low speed and then gradually increases the speed until the desired speed is reached.

1-2 Nameplate Information

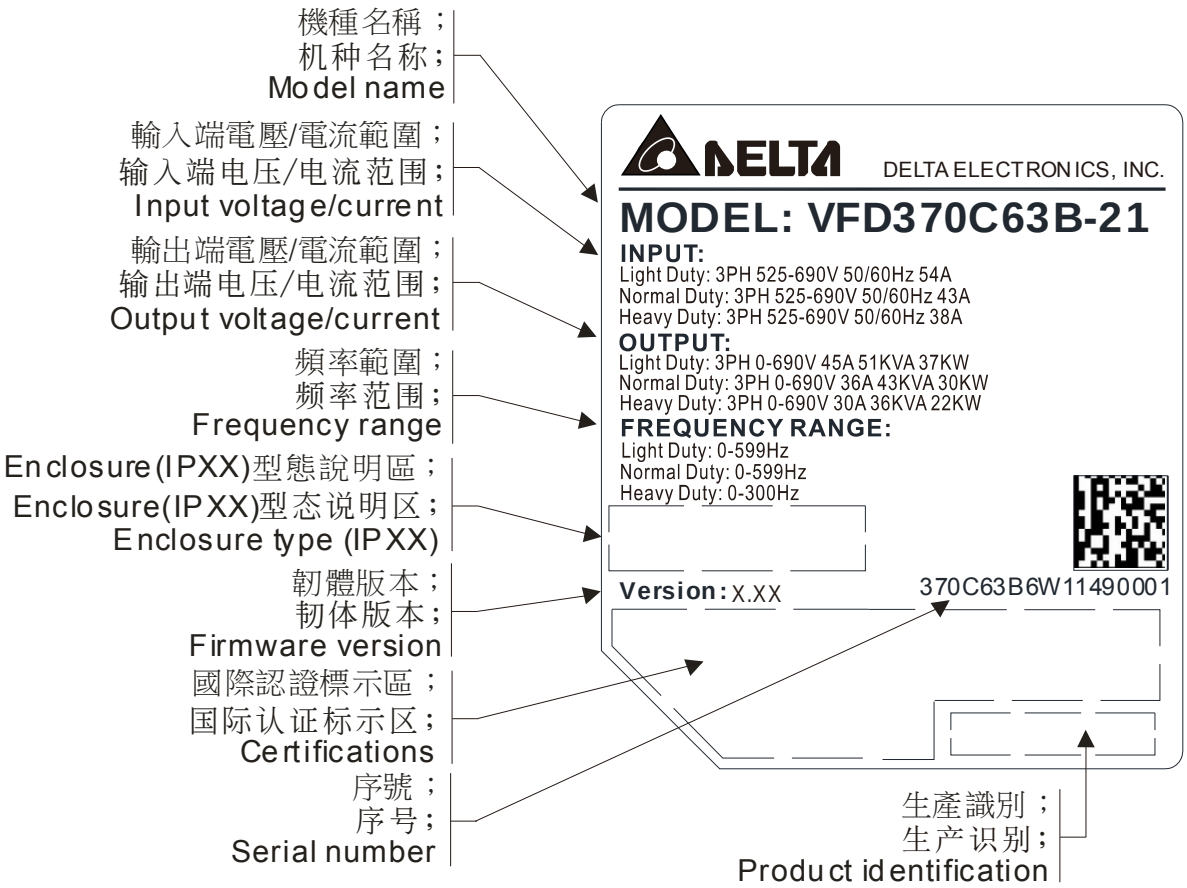

1-3 Model Name

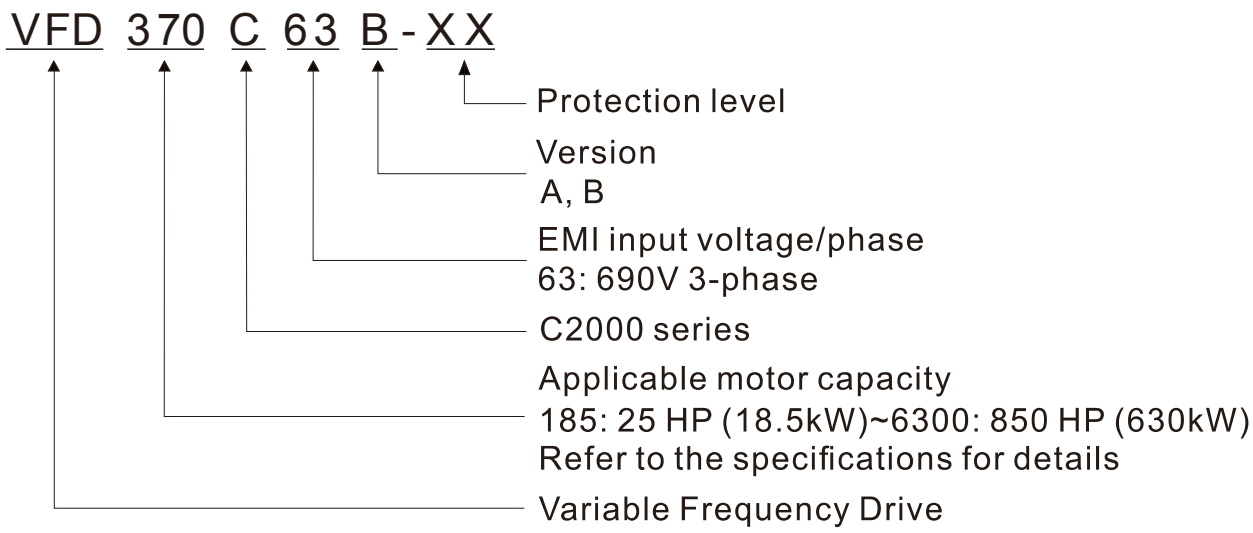

1-4 Serial Number

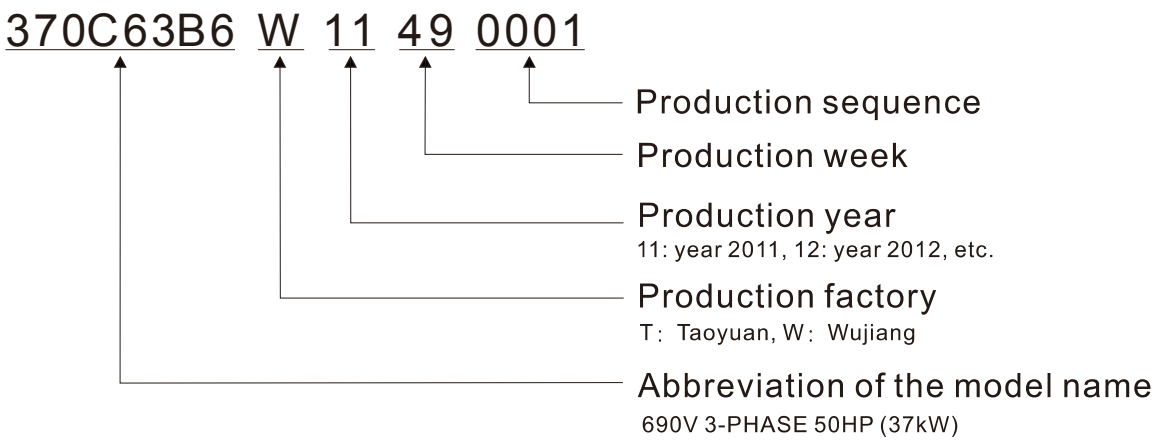

1-5 RFI Jumper

RFI Jumper: The AC motor drive may emit the electrical noise. The RFI jumper is used to suppress the interference (Radio Frequency Interference) on the power line.

Frame A~C

Screw Torque: 8~10kg-cm (6.9-8.7 lb -in.) (0.78~0.98 Nm)

Loosen the screws and remove the MOV-PLATE. Fasten the screws back to the original position after MOV-PLATE is removed.

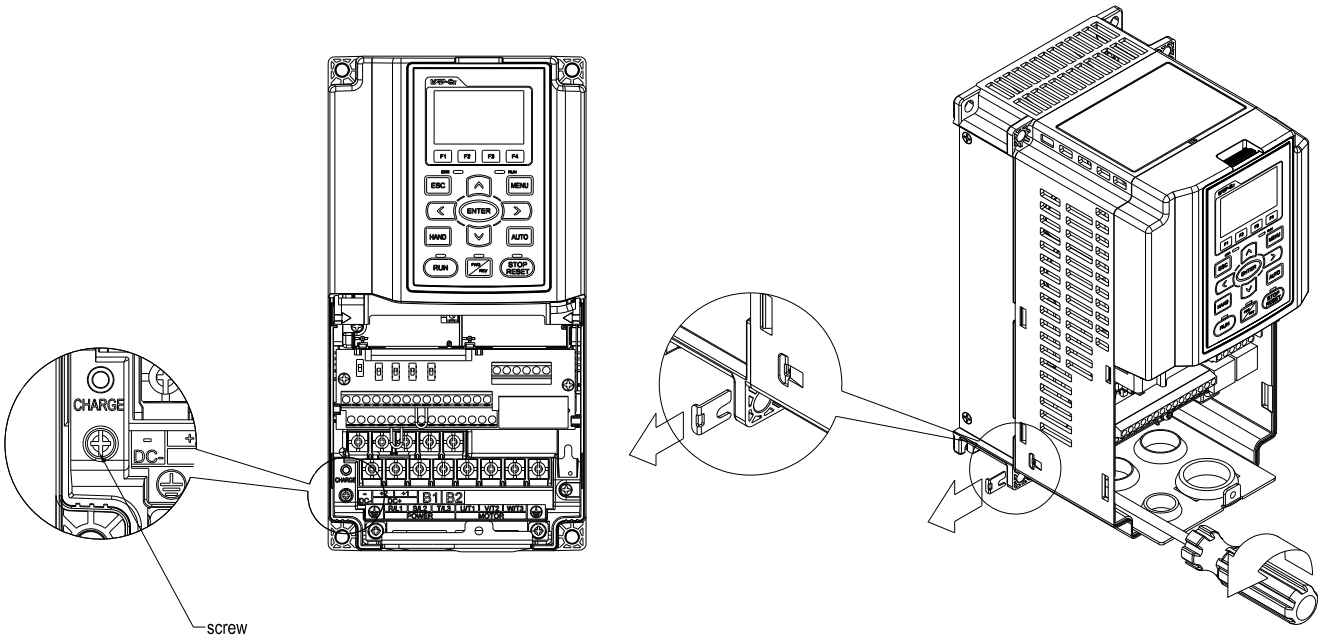

Frame D~H

Remove the MOV-PLATE by hands, no screws need to be loosen.

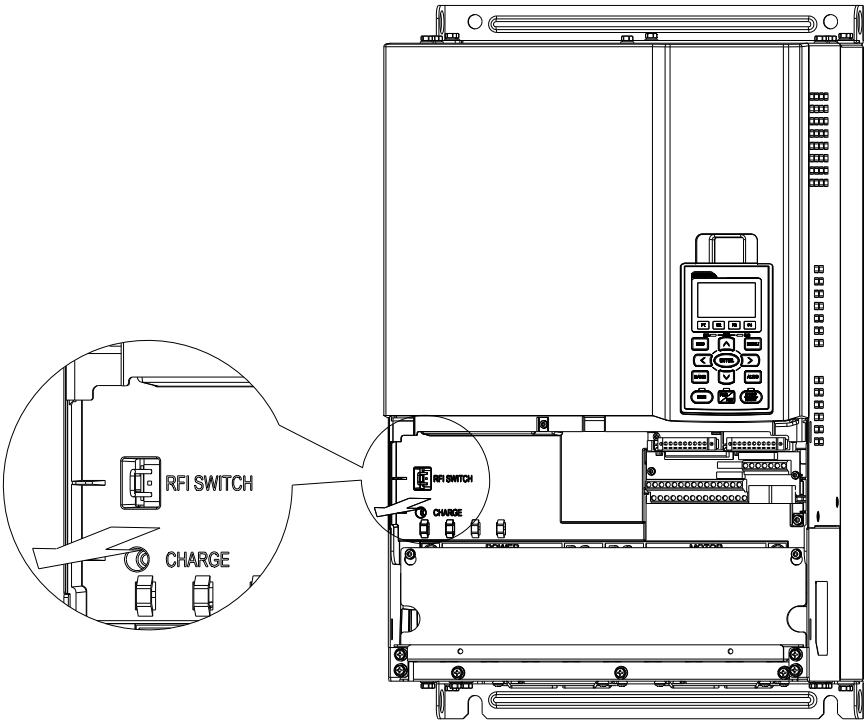

Isolating main power from ground:

When the power distribution system of the Power Regenerative Unit is a floating ground system (IT) or an asymmetric ground system (TN), the RFI short short-circuit cable must be cut off. Cutting off the short-circuit cable cuts off the internal RFI capacitor (filter capacitor) between the system's frame and the central circuits to avoid damaging the central circuits and (according to IEC 61800-3) reduce the ground leakage current.

Important points regarding ground connection

- ☑ To ensure the safety of personnel, proper operation, and to reduce electromagnetic radiation, the Power Regenerative Unit must be properly grounded during installation.
- ☑ The diameter of the cables must meet the size specified by safety regulations.
- ☑ The shielded cable must be connected to the ground of the Power Regenerative Unit to meet safety regulations.
- ☑ The shielded cable can only be used as the ground for equipment when the aforementioned points are met.
- ☑ When installing multiple sets of Power Regenerative Units, do not connect the grounds of the Power Regenerative Units in series. As shown below.

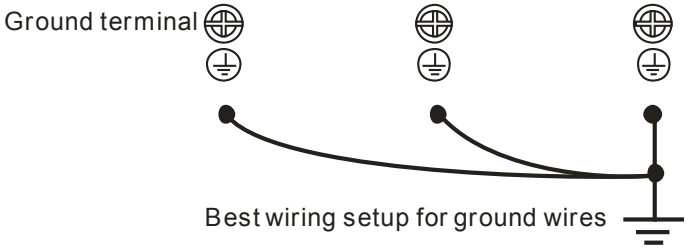

Pay particular attention to the following points:

- ☑ After turning on the main power, do not remove the RFI jumper while the power is on.
- ☑ Make sure the main power is turned off before removing the RFI jumper.
- ☑ Removing the RFI jumper will also cut off the conductivity of the capacitor. Gap discharge may occur once the transient voltage exceeds 1000V.
- ☑ If the RFI jumper is removed, there will no longer be reliable electrical isolation. In other words, all controlled input and outputs can only be seen as low-voltage terminals with basic electrical isolation. Also, when the internal RFI capacitor is cut off, the Power Regenerative Unit will no longer be electromagnetic compatible.
- ☑ The RFI jumper may not be removed if the main power is a grounded power system.
- ☑ The RFI jumper may not be removed while conducting high voltage tests. When conducting a high voltage test to the entire facility, the main power and the motor must be disconnected if leakage current is too high.

Floating Ground System(IT Systems)

A floating ground system is also called IT system, ungrounded system, or high impedance/resistance (greater than 30Ω) grounding system.

- ☑ Disconnect the ground cable from the internal EMC filter.
- ☑ In situations where EMC is required, check whether there is excess electromagnetic radiation affecting nearby low-voltage circuits. In some situations, the adapter and cable naturally provide enough suppression. If in doubt, install an extra electrostatic shielded cable on the power supply side between the main circuit and the control terminals to increase security.
- ☑ Do not install an external RFI/EMC filter, the EMC filter will pass through a filter capacitor, thus connecting power input to ground. This is very dangerous and can easily damage the Power Regenerative Unit.

Asymmetric Ground System(Corner Grounded TN Systems)

Caution: Do not remove the RFI jumper while the input terminal of the Power Regenerative Unit carries power.

In the following four situations, the RFI jumper must be removed. This is to prevent the system from grounding through the RFI capacitor, damaging the Power Regenerative Unit.

RFI jumper must be removed	
1. Grounding at a corner in a triangle configuration 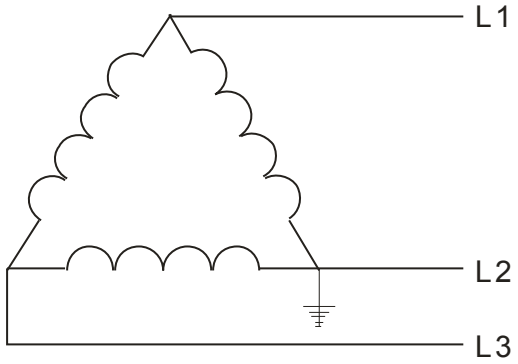	2. Grounding at a midpoint in a polygonal configuration 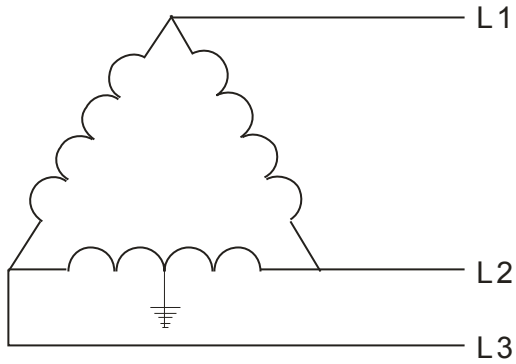
3. Grounding at one end in a single-phase configuration 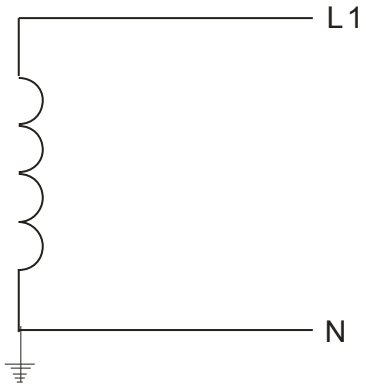	4. No stable neutral grounding in a three-phase autotransformer configuration 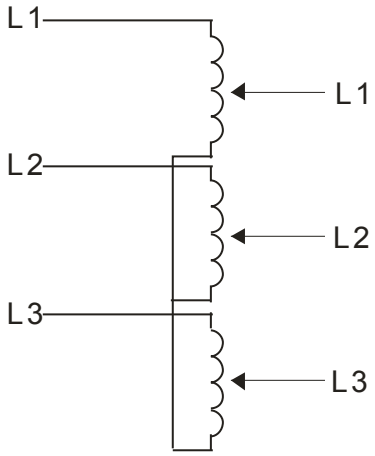
RFI jumper can be used	
Internal grounding through RFI capacitor, which reduces electromagnetic radiation. In a situation with higher requirements for electromagnetic compatibility, and using a symmetrical grounding power system, an EMC filter can be installed. As a reference, the diagram on the right is a symmetrical grounding power system. 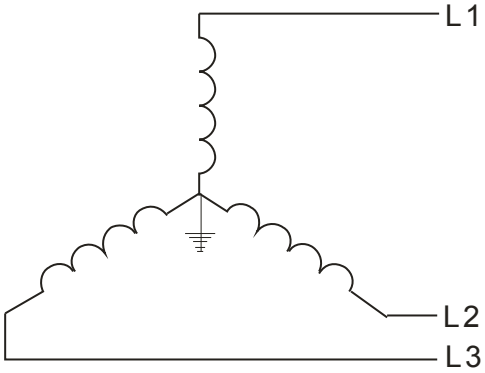	

1-6 Dimensions

Frame A
VFD015C53A-21; VFD022C53A-21; VFD037C53A-21

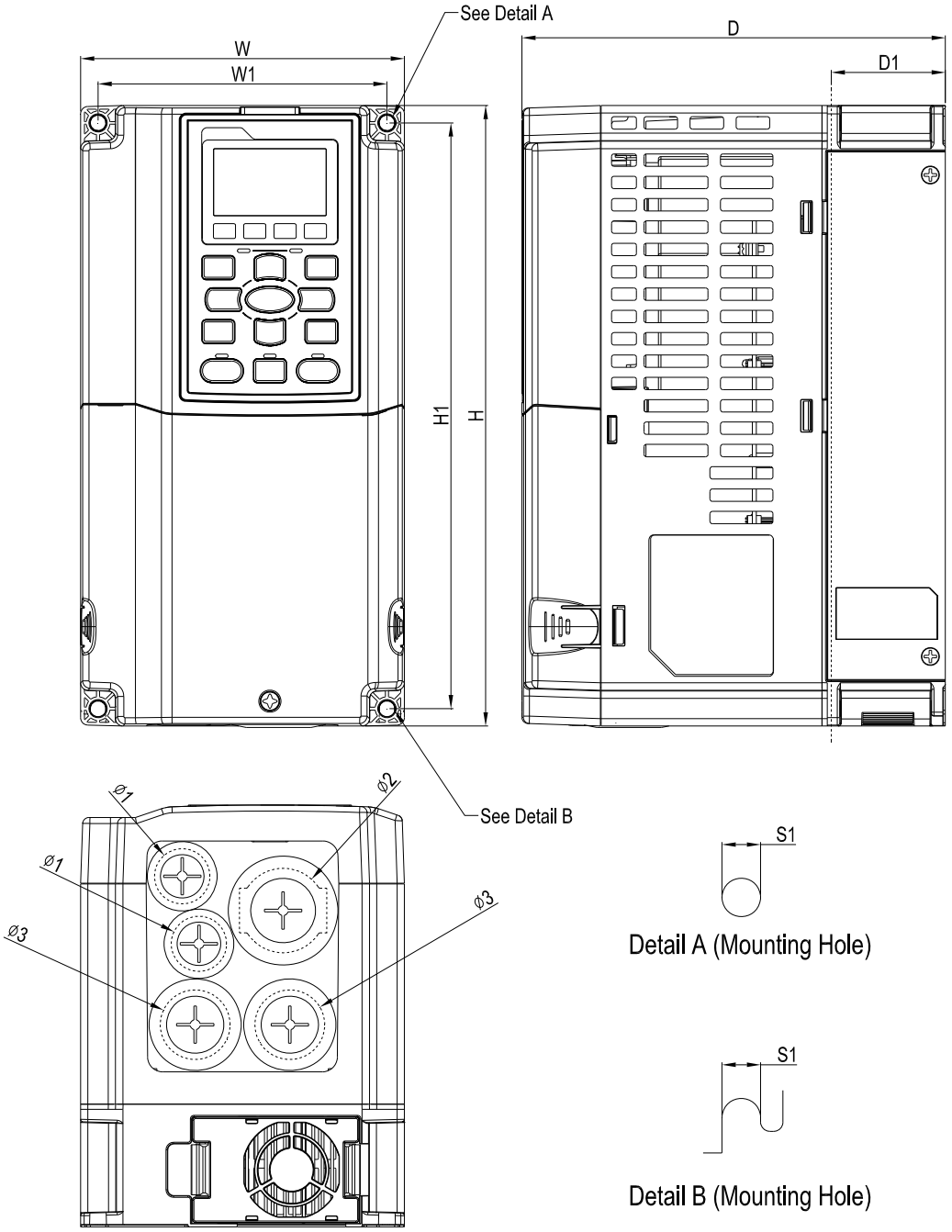

Unit: mm [inch]

Frame	W	H	D	W1	H1	D1*	S1	Φ1	Φ2	Φ3
A1	130.0 [5.12]	250.0 [9.84]	170.0 [6.69]	116.0 [4.57]	236.0 [9.29]	45.8 [1.80]	6.2 [0.24]	22.2 [0.87]	34.0 [1.34]	28.0 [1.10]

D1*: Flange mounting

Frame B

VFD055C53A-21; VFD075C53A-21; VFD110C53A-21; VFD150C53A-21

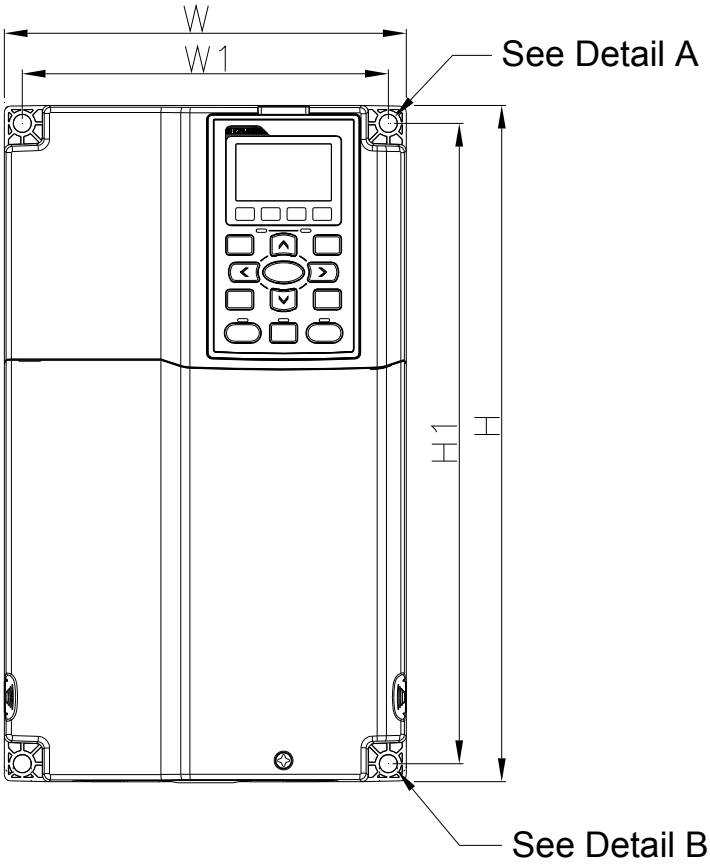

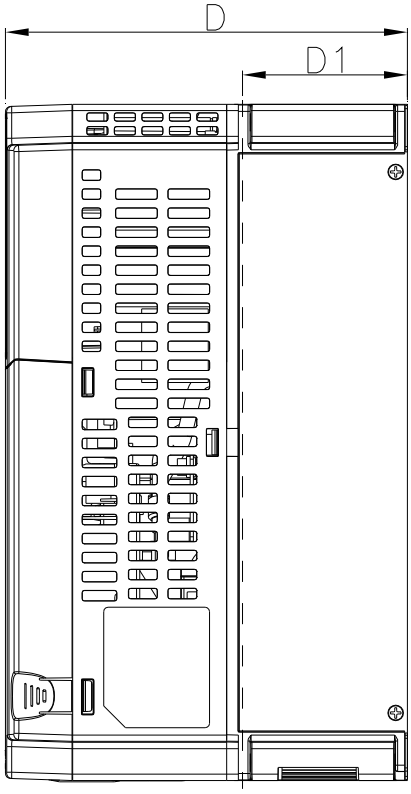

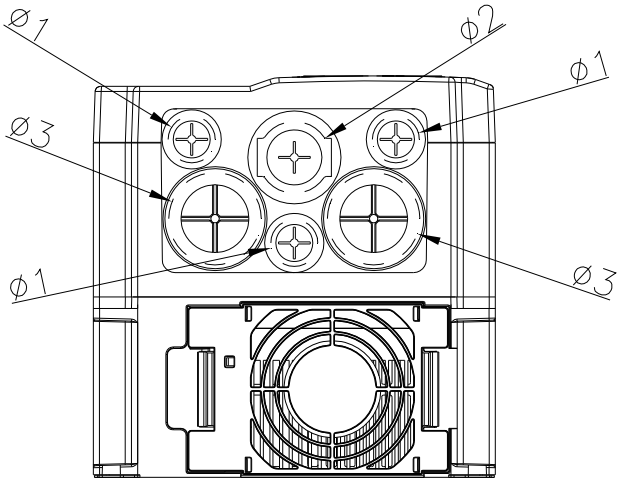

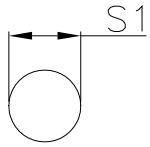

Detail A (Mounting Hole)

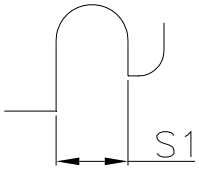

Detail B (Mounting Hole)

Unit: mm [inch]

Frame	W	H	D	W1	H1	D1*	S1	Φ1	Φ2	Φ3
B1	190.0 [7.48]	320.0 [12.60]	190.0 [7.48]	173.0 [6.81]	303.0 [11.93]	77.9 [3.07]	8.5 [0.33]	22.2 [0.87]	34.0 [1.34]	43.8 [1.72]

D1*: Flange mounting

Frame C

VFD185C63B-21;VFD220C63B-21;VFD300C63B-21;VFD370C63B-21

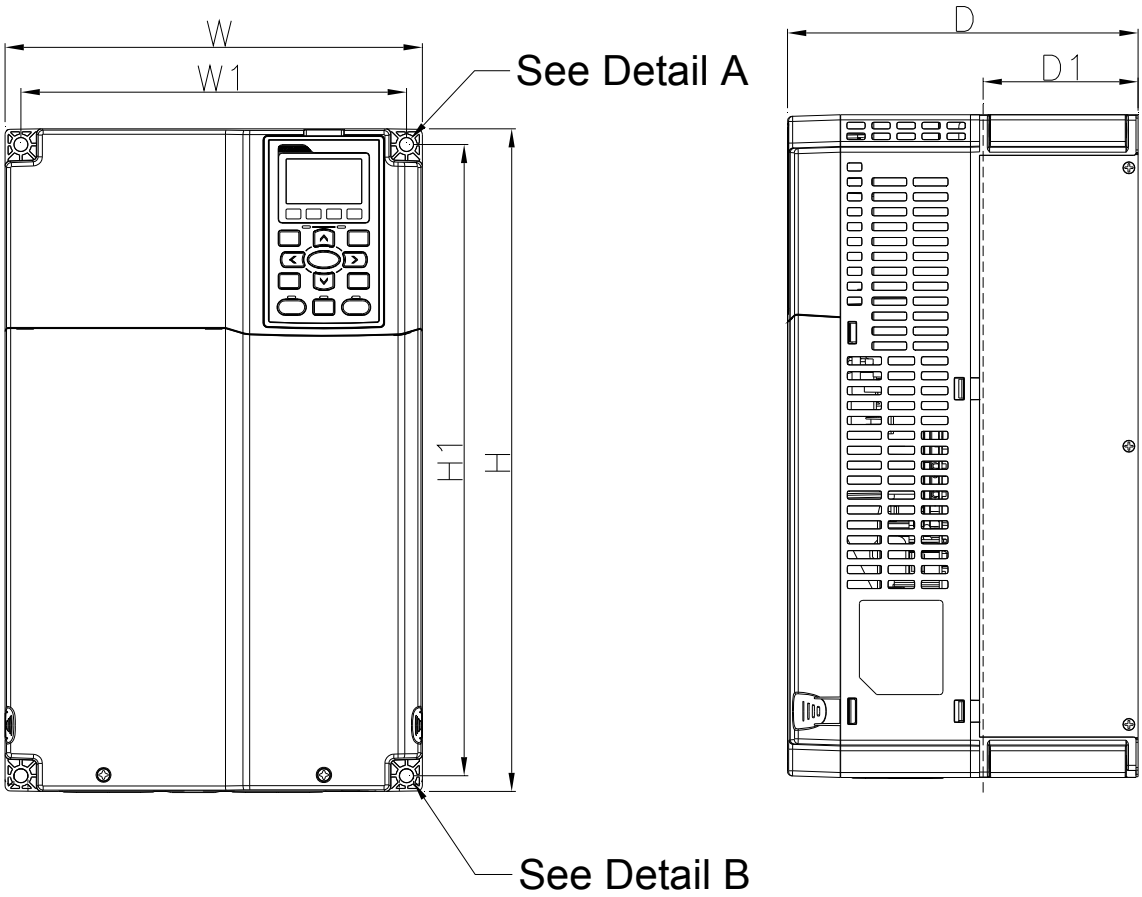

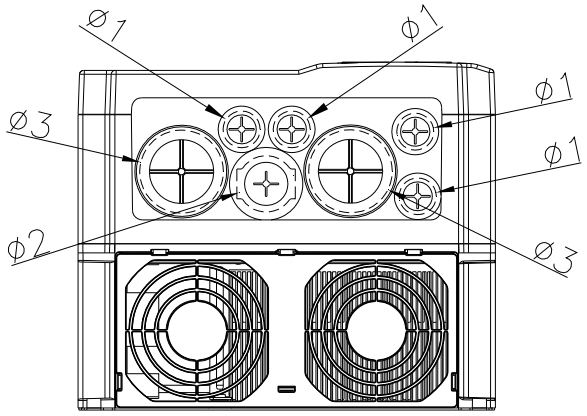

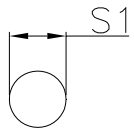

Detail A (Mounting Hole)

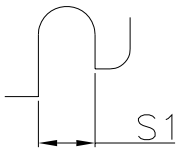

Detail B (Mounting Hole)

Unit: mm [inch]

Frame	W	H	D	W1	H1	D1*	S1	Φ1	Φ2	Φ3
C1	250.0 [9.84]	400.0 [15.75]	210.0 [8.27]	231.0 [9.09]	381.0 [15.00]	92.9 [3.66]	8.5 [0.33]	22.2 [0.87]	34.0 [1.34]	50.0 [1.97]

D1*: Flange mounting

Frame D

D1: VFD450C63B-00; VFD550C63B-00

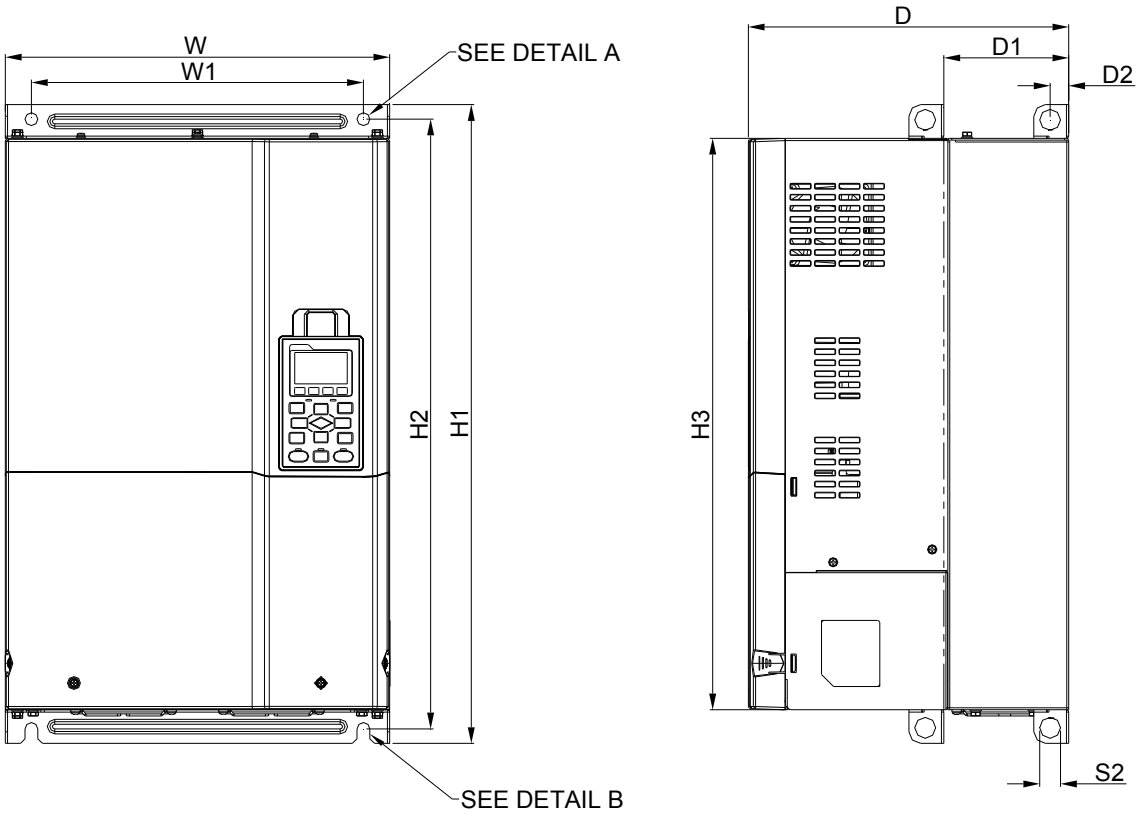

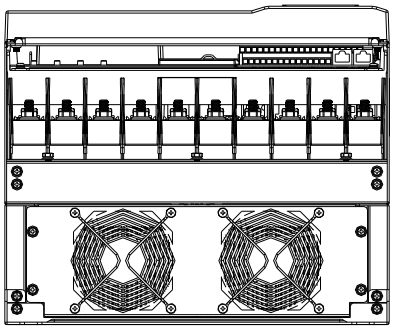

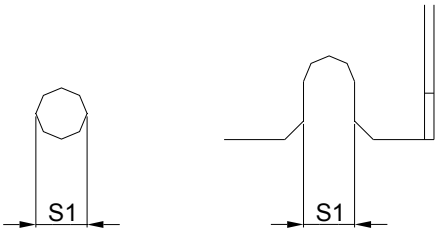

DETAIL A
(MOUNTING HOLE)

DETAIL B
(MOUNTING HOLE)

Unit: mm [inch]

Frame	W	H	D	W1	H1	H2	H3	D1*	D2	S1	S2	Φ1	Φ2	Φ3
D1	330.0 [12.99]	-	275.0 [10.83]	285.0 [11.22]	550.0 [21.65]	525.0 [20.67]	492.0 [19.37]	107.2 [4.22]	16.0 [0.63]	11.0 [0.43]	18.0 [0.71]	-	-	-

D1*: Flange mounting

Frame D

D2: VFD450C63B-21; VFD550C63B-21

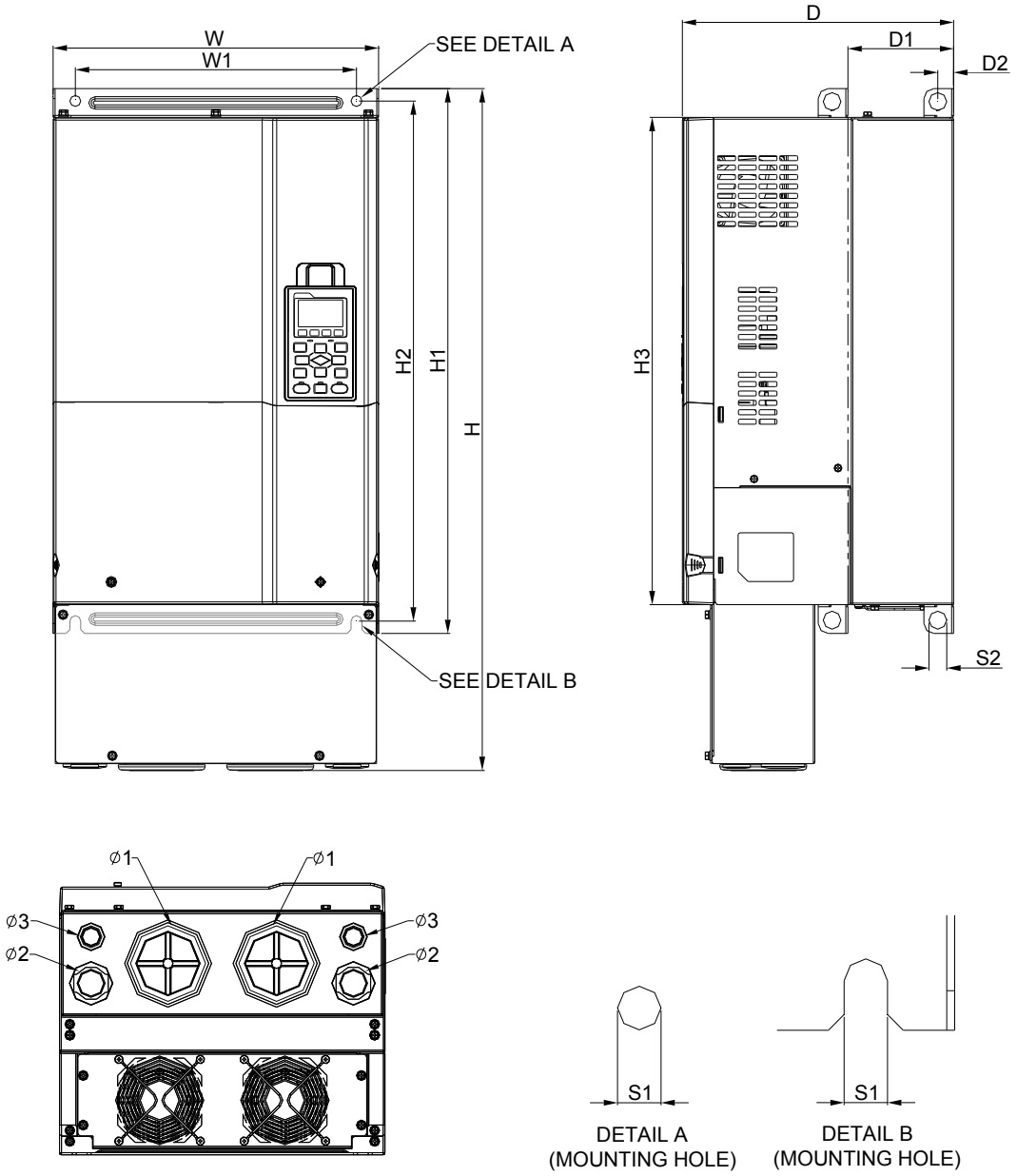

Unit: mm [inch]

Frame	W	H	D	W1	H1	H2	H3	D1*	D2	S1	S2	Φ1	Φ2	Φ3
D2	330.0 [12.99]	688.3 [27.10]	275.0 [10.83]	285.0 [11.22]	550.0 [21.65]	525.0 [20.67]	492.0 [19.37]	107.2 [4.22]	16.0 [0.63]	11.0 [0.43]	18.0 [0.71]	76.2 [3.00]	34.0 [1.34]	22.0 [0.87]

D1*: Flange mounting

Frame E

E1: VFD750C63B-00; VFD900C63B-00; VFD1100C63B-00; VFD1320C63B-00

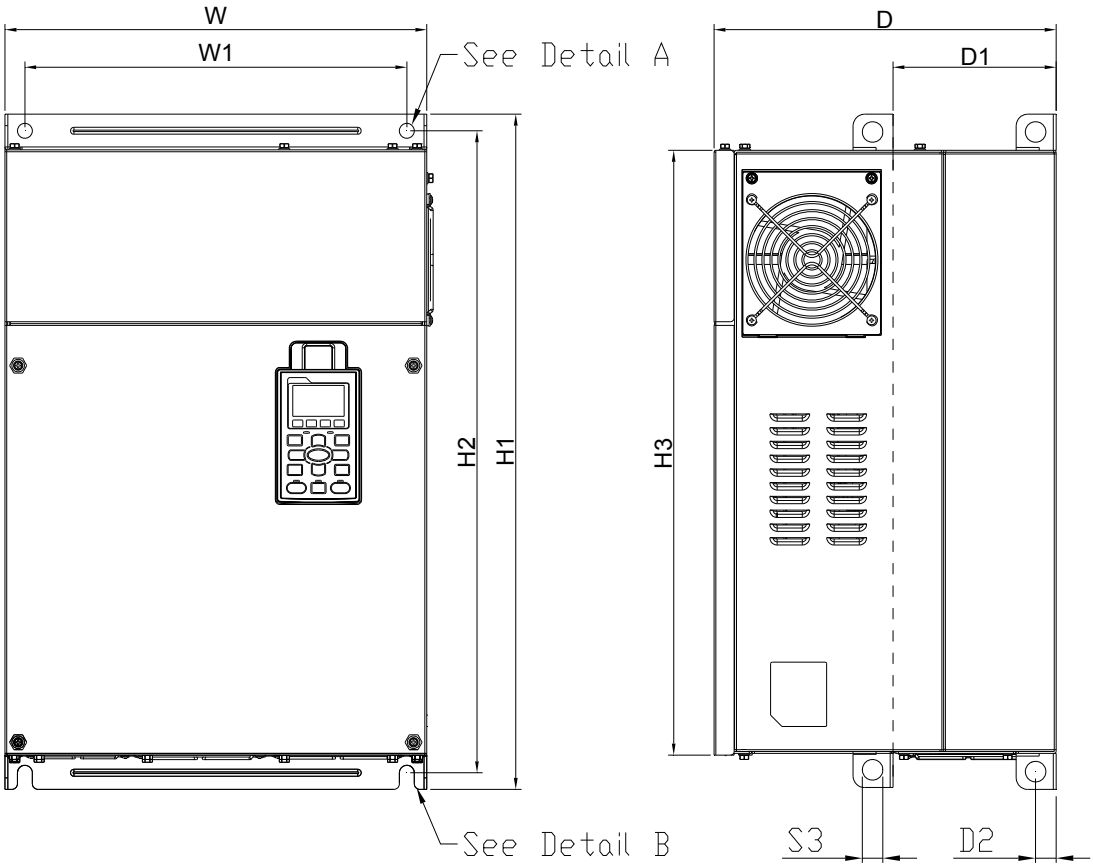

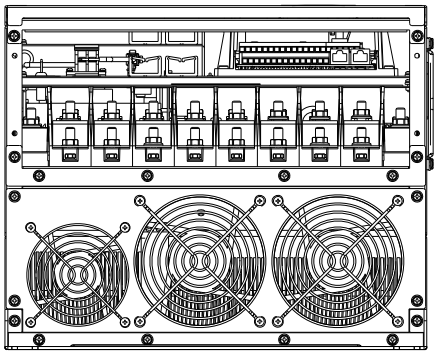

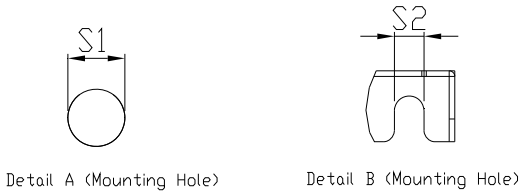

Unit: mm [inch]

Frame	W	H	D	W1	H1	H2	H3	D1*	D2	S1, S2	S3	Φ1	Φ2	Φ3
E1	370.0 [14.57]	-	300.0 [11.81]	335.0 [13.19	589 [23.19]	560.0 [22.05]	528.0 [20.80]	143.0 [5.63]	18.0 [0.71]	13.0 [0.51]	18.0 [0.71]	-	-	-

D1*: Flange mounting

Frame E

E2: VFD750C63B-21; VFD900C63B-21; VFD1100C63B-21; VFD1320C63B-21

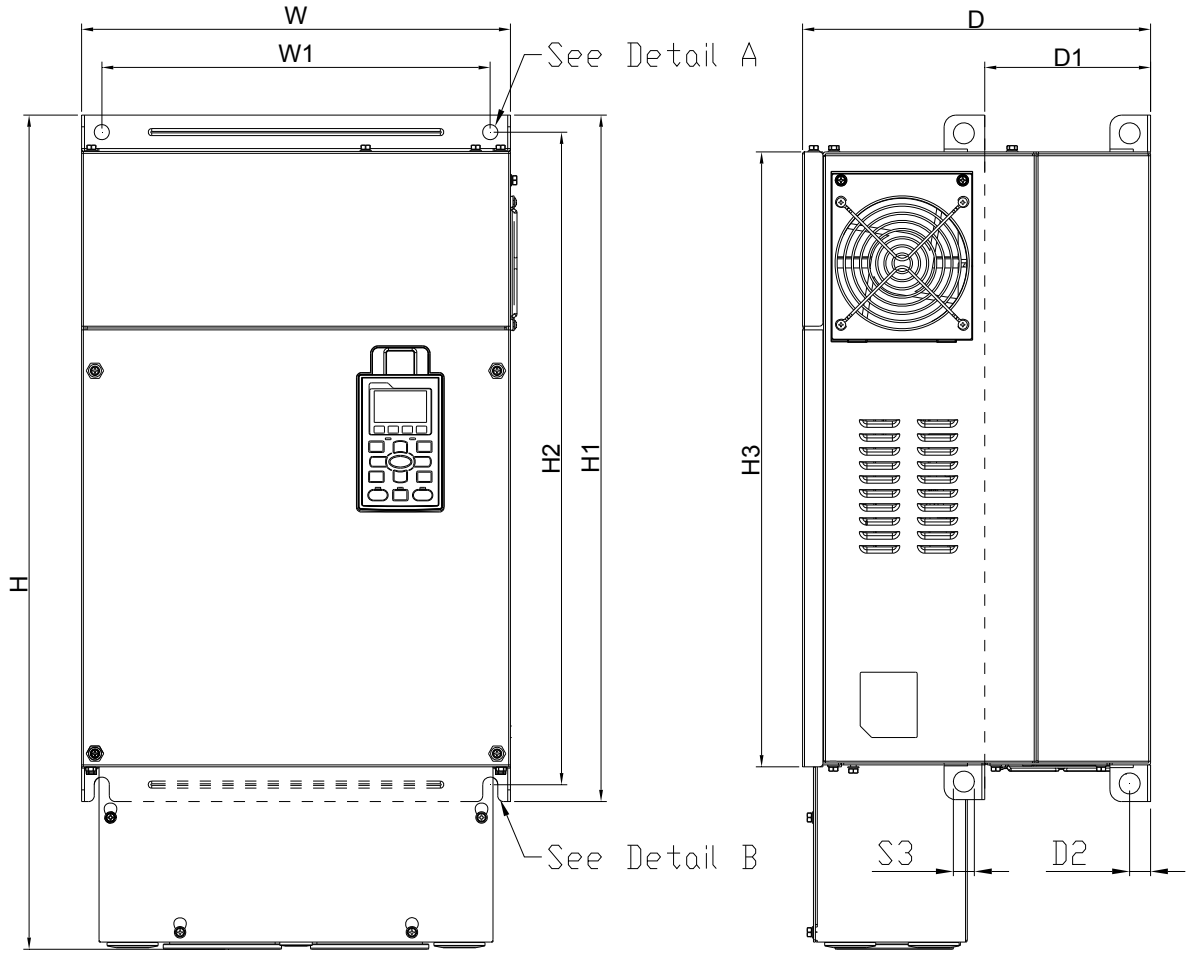

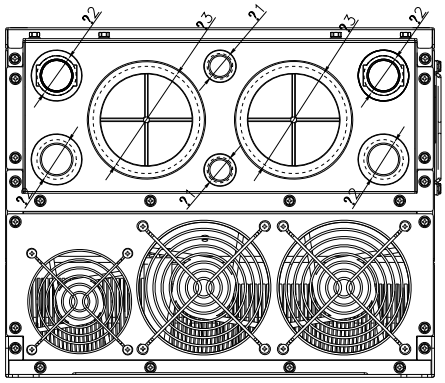

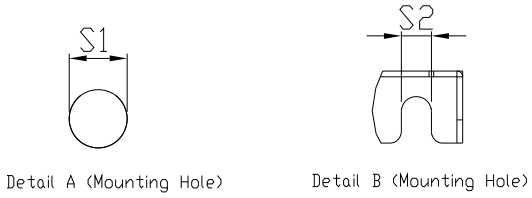

Unit: mm [inch]

Frame	W	H	D	W1	H1	H2	H3	D1*	D2	S1, S2	S3	Φ1	Φ2	Φ3
E2	370.0 [14.57]	715.8 [28.18]	300.0 [11.81]	335.0 [13.19	589 [23.19]	560.0 [22.05]	528.0 [20.80]	143.0 [5.63]	18.0 [0.71]	13.0 [0.51]	18.0 [0.71]	22.0 [0.87]	34.0 [1.34]	92.0 [3.62]

D1*: Flange mounting

Frame F

F1: VFD1600C63B-00; VFD2000C63B-00

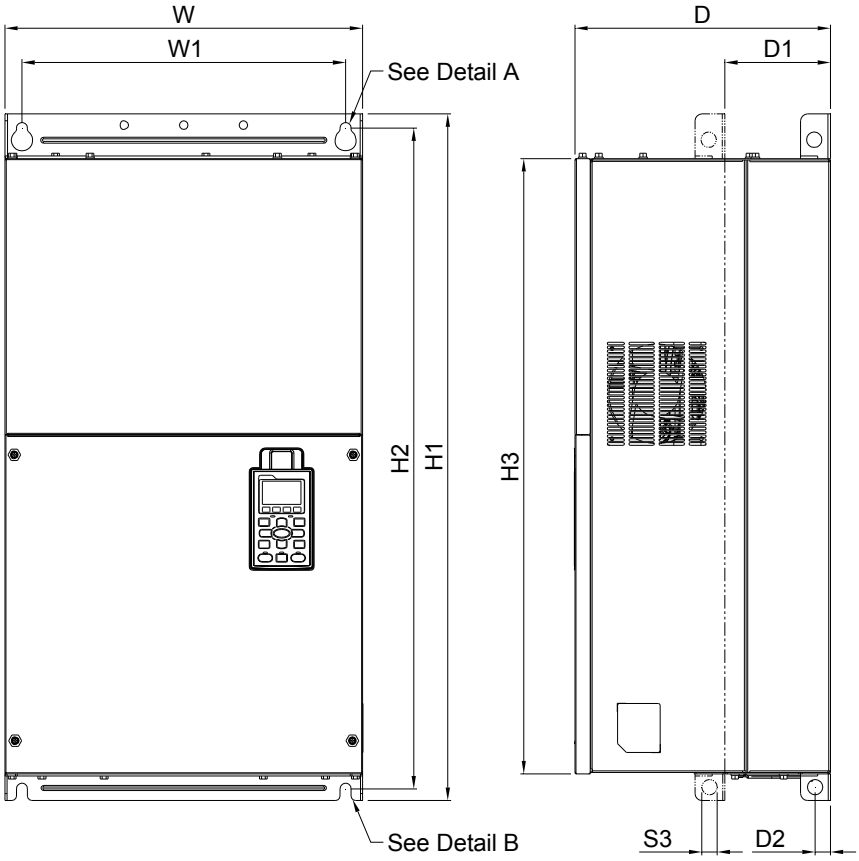

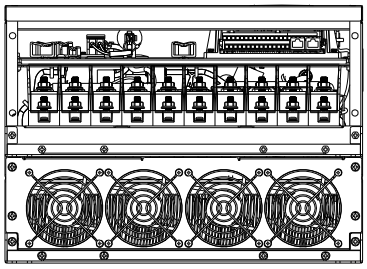

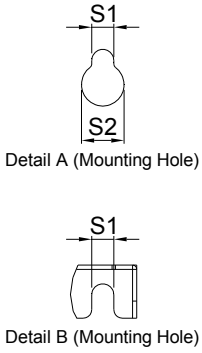

Unit: mm [inch]

Frame	W	H	D	W1	H1	H2	H3	D1*	D2	S1	S2	S3
F1	420.0 [16.54]	-	300.0 [11.81]	380.0 [14.96]	800.0 [31.50]	770.0 [30.32]	717.0 [28.23]	124.0 [4.88]	18.0 [0.71]	13.0 [0.51]	25.0 [0.98]	18.0 [0.71]

D1*: Flange mounting

Frame F

F2: VFD1600C63B-21; VFD2000C63B-21

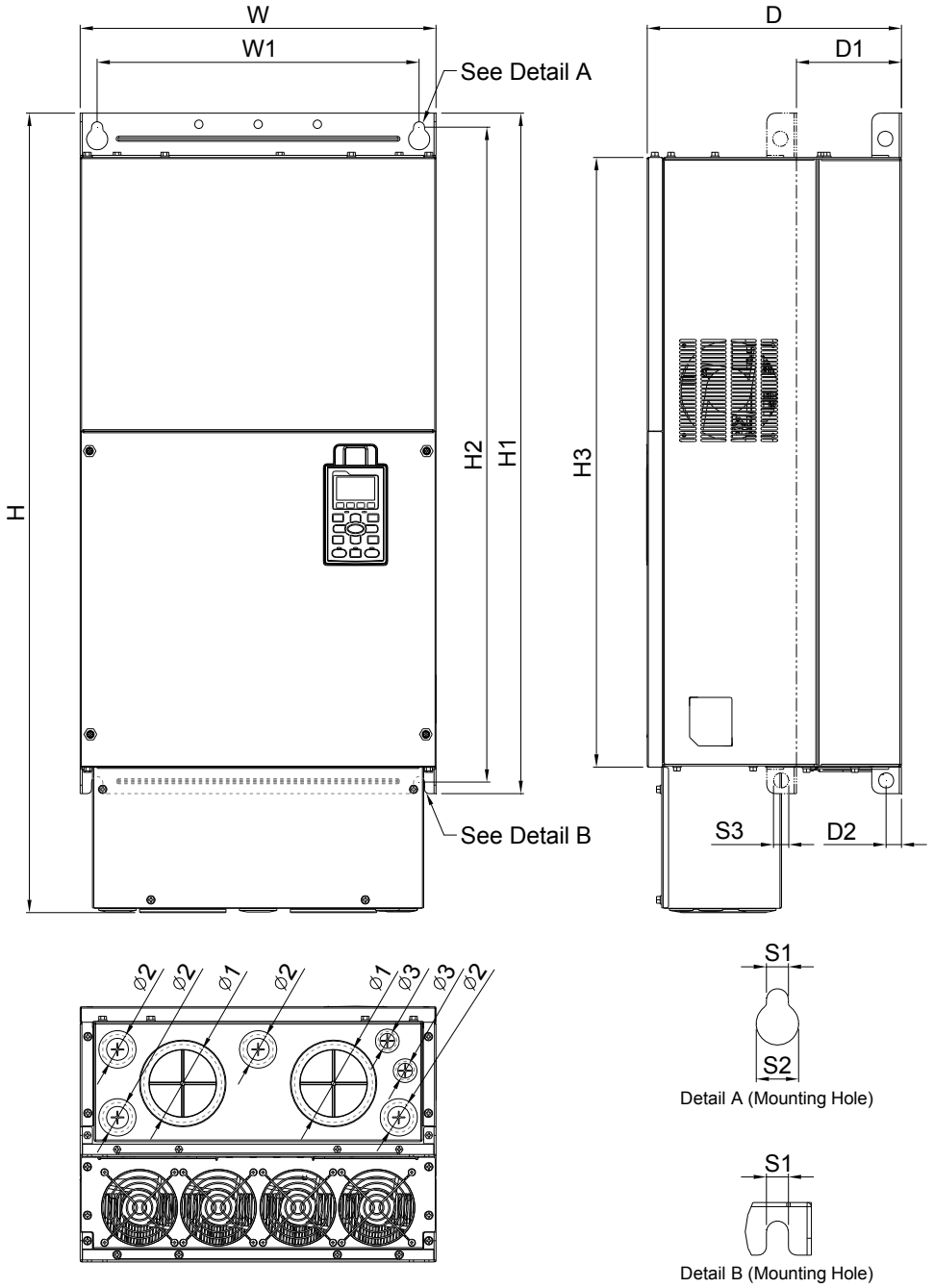

Unit: mm [inch]

Frame	W	H	D	W1	H1	H2	H3	D1*	D2	S1	S2	S3
F2	420.0 [16.54]	940.0 [37.00]	300.0 [11.81]	380.0 [14.96]	800.0 [31.50]	770.0 [30.32]	717.0 [28.23]	124.0 [4.88]	18.0 [0.71]	13.0 [0.51]	25.0 [0.98]	18.0 [0.71]

Frame	Φ1	Φ2	Φ3
F2	92.0 [3.62]	35.0 [1.38]	22.0 [0.87]

D1*: Flange mounting

Frame G

G1: VFD2500C63B-00; VFD3150C63B-00

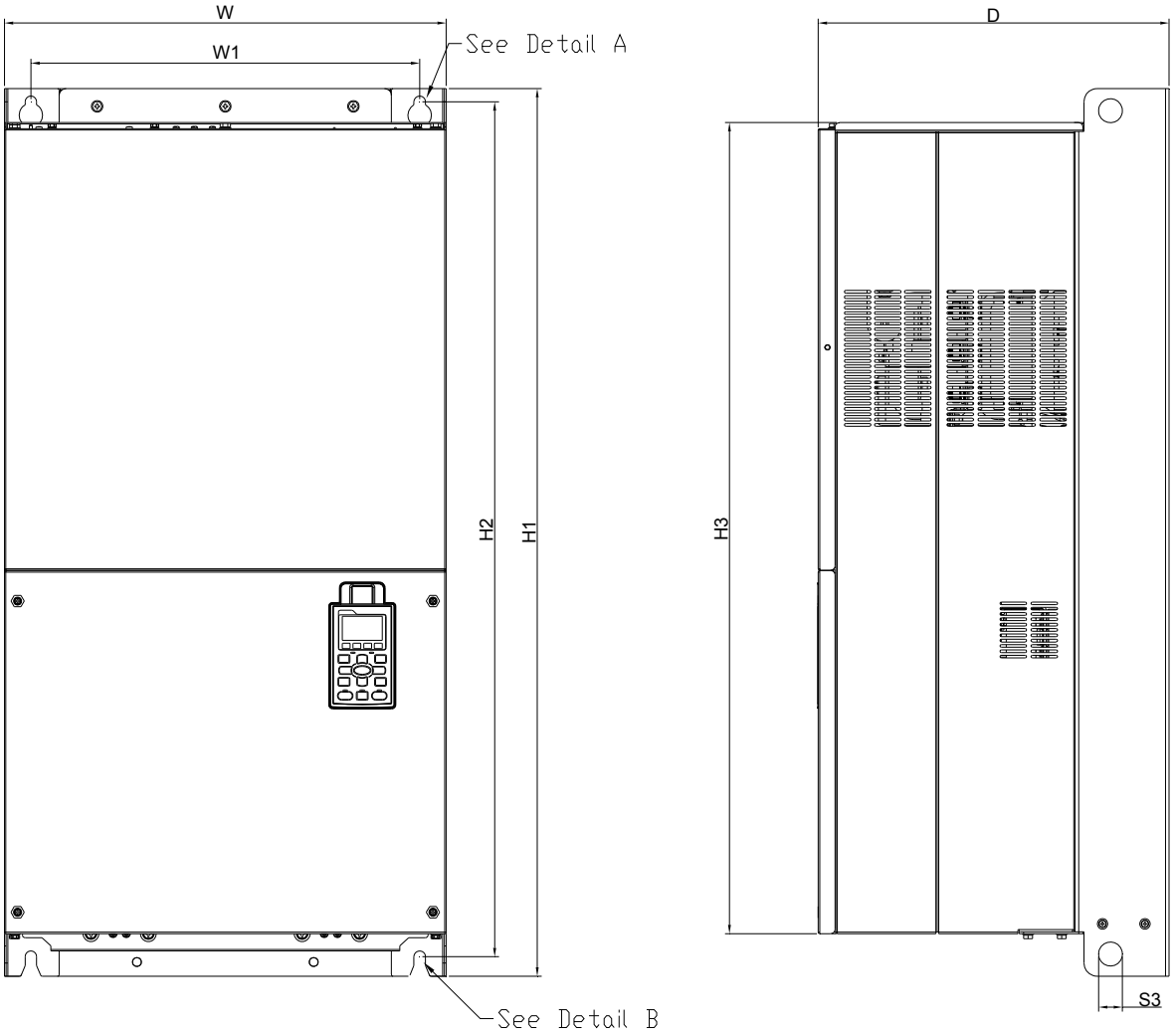

Unit: mm [inch]

Frame	W	H	D	W1	H1	H2	H3	S1	S2	S3	Φ1	Φ2	Φ3
G1	500.0 [19.69]	-	397.0 [15.63]	440.0 [217.32]	1000.0 [39.37]	963.0 [37.91]	913.6 [35.97]	13.0 [0.51]	26.5 [1.04]	27.0 [1.06]	-	-	-

Frame G

G2: VFD2500C63B-21; VFD3150C63B-21

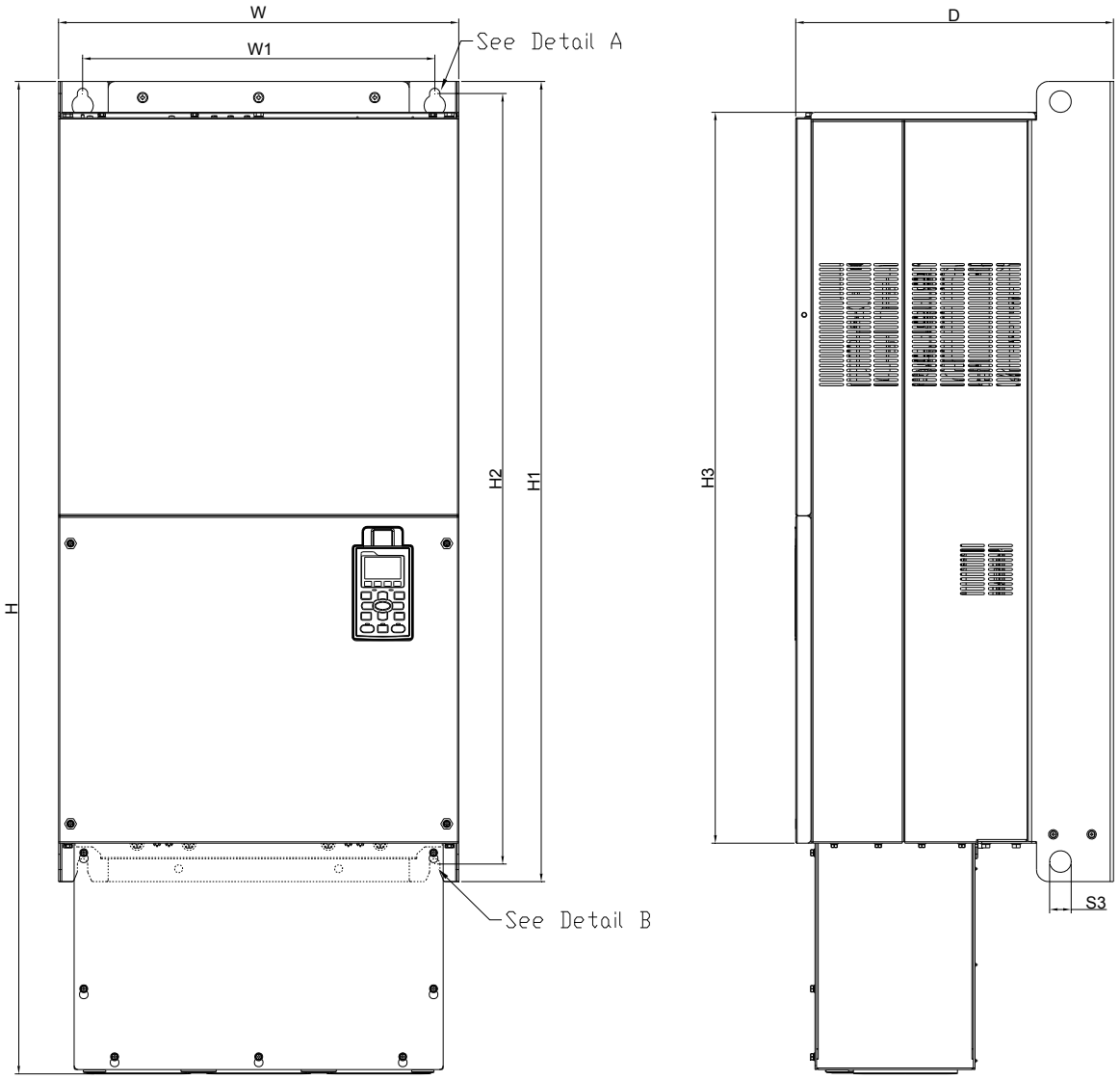

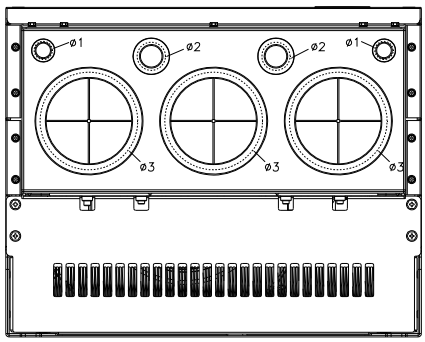

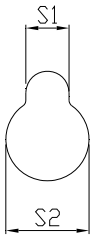

Detail A (Mounting Hole)

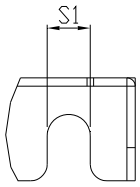

Detail B (Mounting Hole)

Unit: mm [inch]

Frame	W	H	D	W1	H1	H2	H3	S1	S2	S3	Φ1	Φ2	Φ3
G2	500.0 [19.69]	1240.2 [48.83]	397.0 [15.63]	440.0 [217.32]	1000.0 [39.37]	963.0 [37.91]	913.6 [35.97]	13.0 [0.51]	26.5 [1.04]	27.0 [1.06]	22.0 [0.87]	34.0 [1.34]	117.5 [4.63]

Frame H

H1: VFD4000C63B-00; VFD4500C63B-00; VFD5600C63B-00 ; VFD6300C63B-00

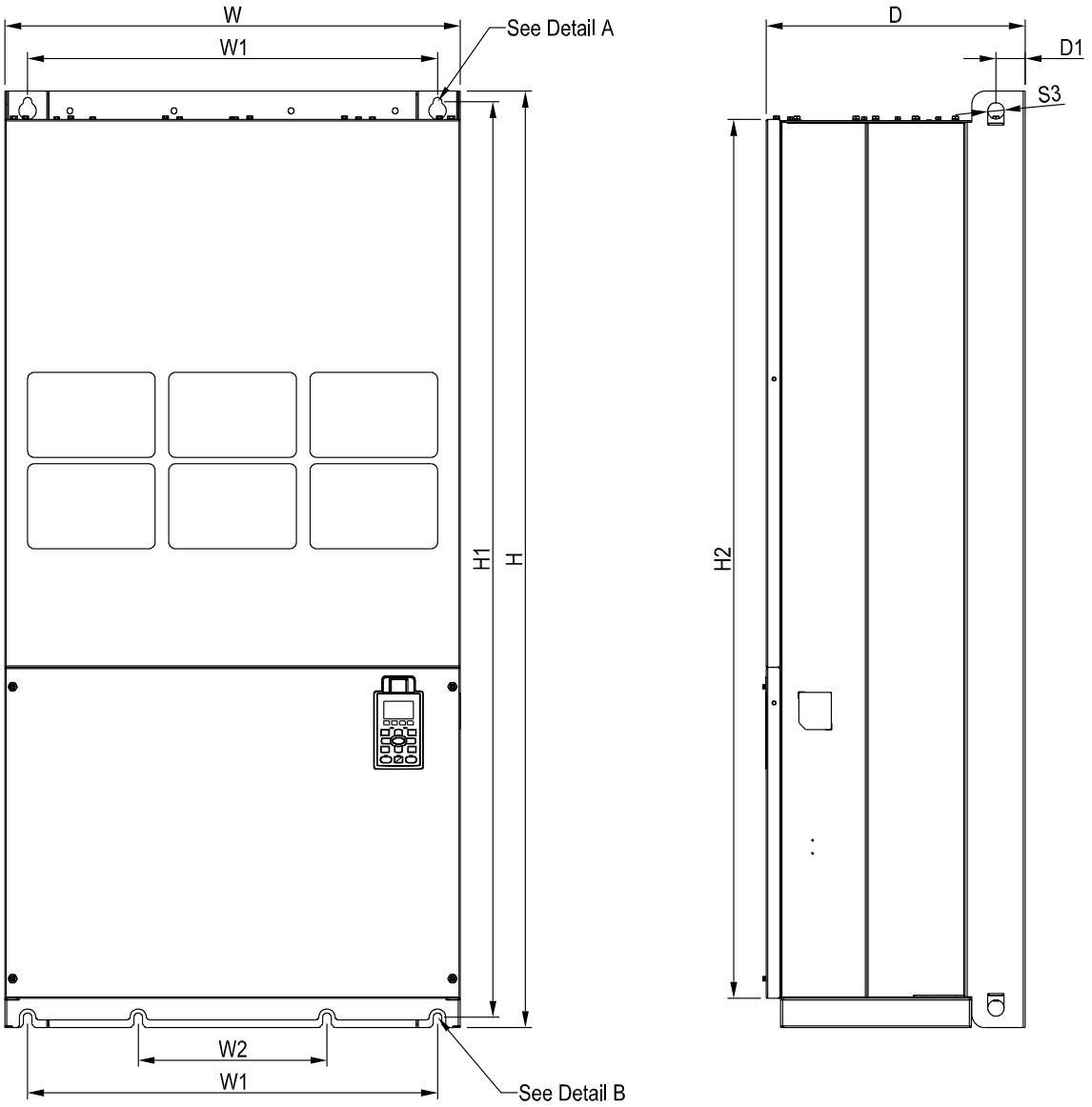

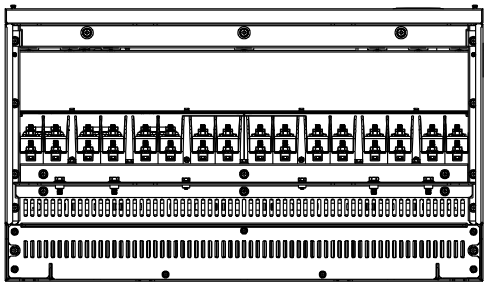

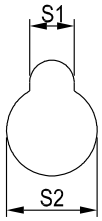

See Detail A(Mounting Hole)

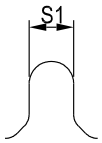

See Detail B(Mounting Hole)

Unit: mm [inch]

Frame	W	H	D	W1	W2	W3	W4	W5	W6	H1	H2	H3	H4
H1	700.0 [27.56]	1435.0 [56.5]	398.0 [15.67]	630.0 [24.8]	290.0 [11.42]	-	-	-	-	1403.0 [55.24]	1346.6 [53.02]	-	-

Frame	H5	D1	D2	D3	D4	D5	D6	S1	S2	S3	Φ1	Φ2	Φ3
H1	-	45.0 [1.77]	-	-	-	-	-	13.0 [0.51]	26.5 [1.04]	25.0 [0.98]	-	-	-

Frame H

H3: VFD4000C63B-21; VFD4500C63B-21; VFD5600C63B-21 ; VFD6300C63B-21

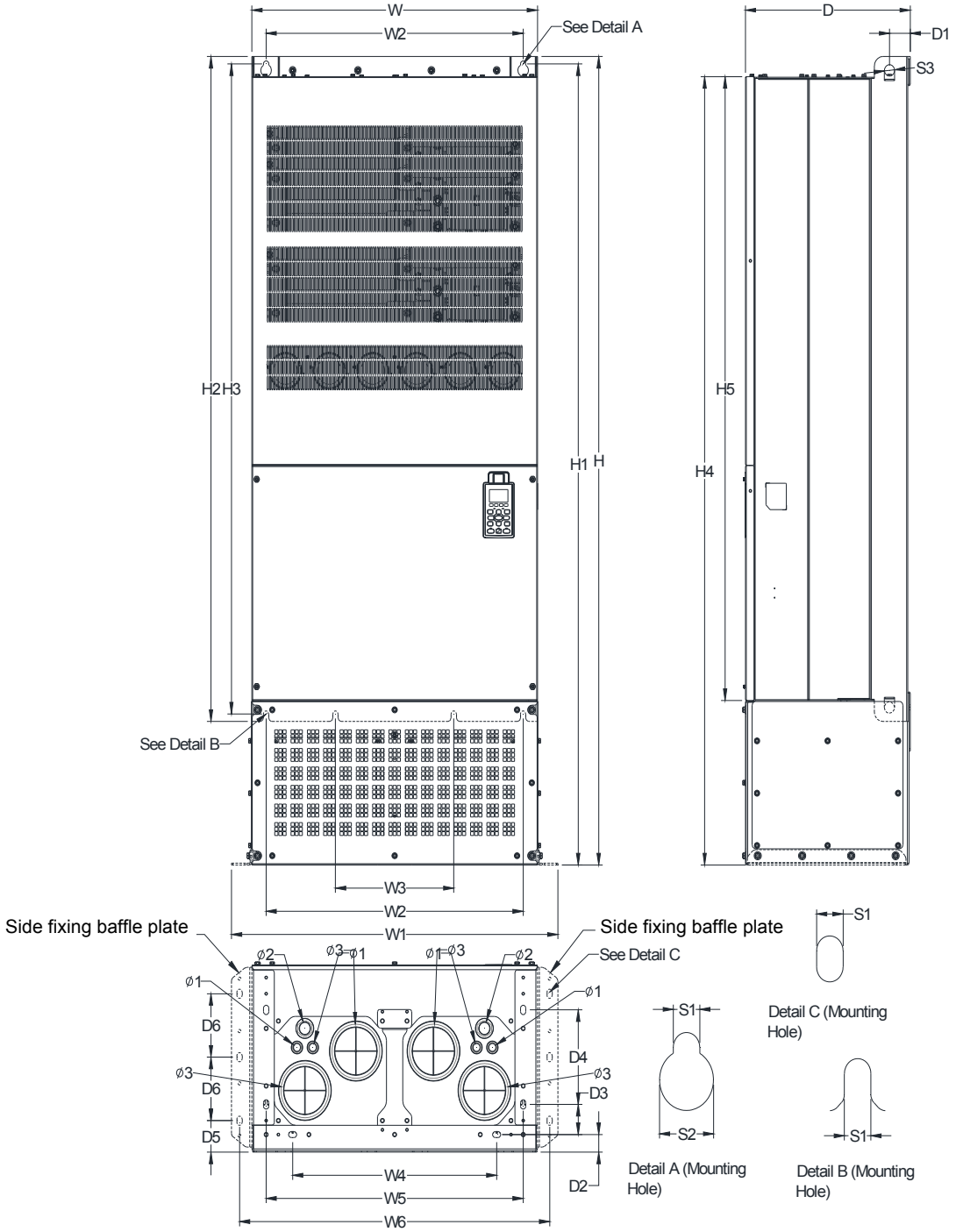

Unit: mm [inch]

Frame	W	H	D	W1	W2	W3	W4	W5	W6	H1	H2	H3	H4
H3	700.0 [27.56]	1745.0 [68.70]	404.0 [15.91]	630.0 [24.8]	500.0 [19.69]	630.0 [24.8]	760.0 [29.92]	800.0 [31.5]	-	1729.0 [68.07]	1701.6 [66.99]	-	-

Frame	H5	D1	D2	D3	D4	D5	D6	S1	S2	S3	Φ1	Φ2	Φ3
H3	-	51.0 [2.01]	38.0 [1.50]	65.0 [2.56]	204.0 [8.03]	68.0 [2.68]	137.0 [5.39]	13.0 [0.51]	26.5 [1.04]	25.0 [0.98]	22.0 [0.87]	34.0 [1.34]	117.5 [4.63]

Digital Keypad

KPC-CC01

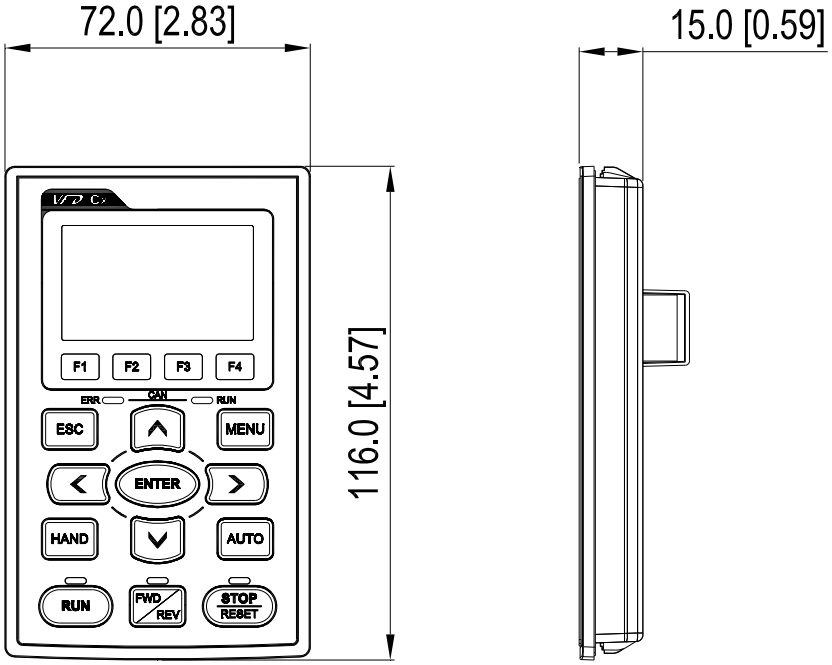

Chapter 2 Installation

Minimum Mounting Clearance

NOTE

- ☑ Prevent fiber particles, scraps of paper, shredded wood saw dust, metal particles, etc. from adhering to the heat sink
- ☑ Install the AC motor drive in a metal cabinet. When installing one drive below another one, use a metal separation between the AC motor drives to prevent mutual heating and to prevent the risk of fire accident.
- ☑ Install the AC motor drive in Pollution Degree 2 environments only: normally only nonconductive pollution occurs and temporary conductivity caused by condensation is expected.

The appearances shown in the following figures are for reference only.

Airflow direction: Inflow Outflow Distance

Single drive installation (Frame A-H)

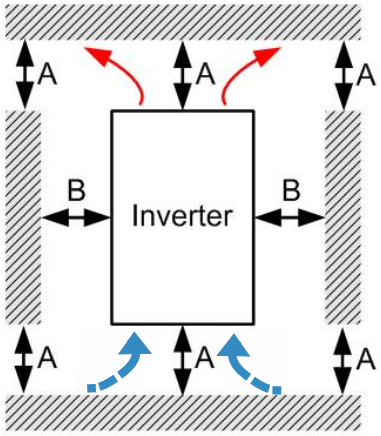

Side-by-side horizontal installation (Frame A-C)

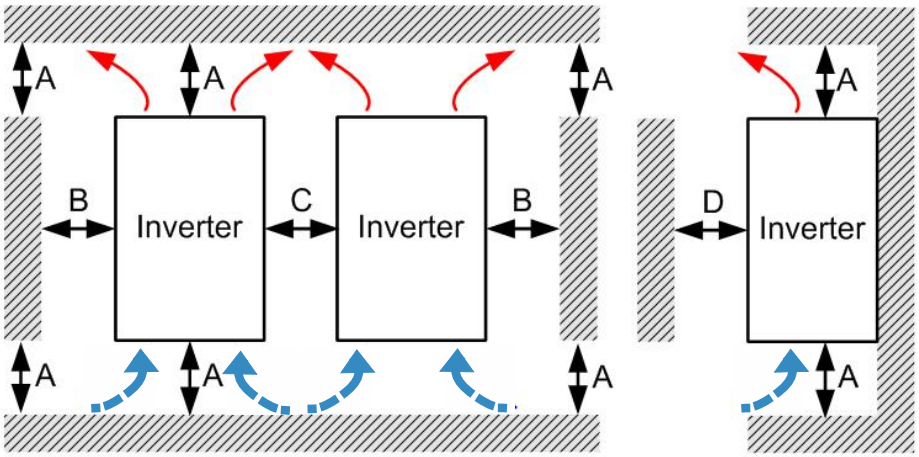

Multiple drives, single side-by-side horizontal installation (Frame G, H)

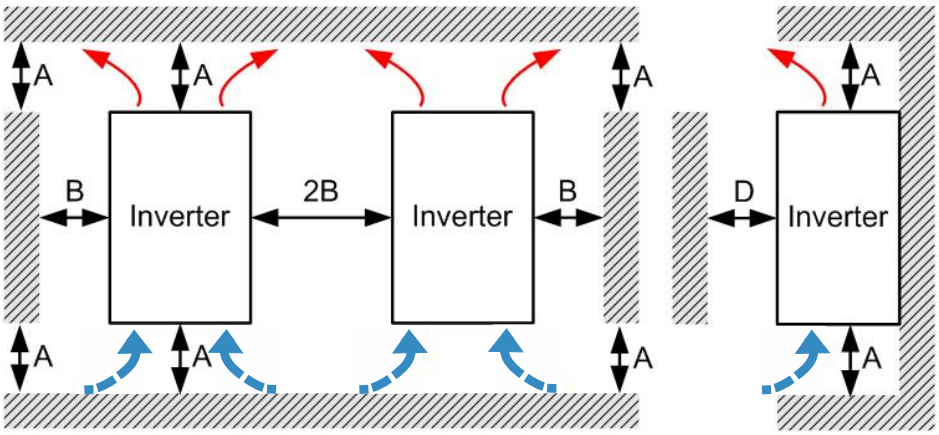

Multiple drives, side-by-side installation (Frame D, E, F) Install metal separation between the drives.

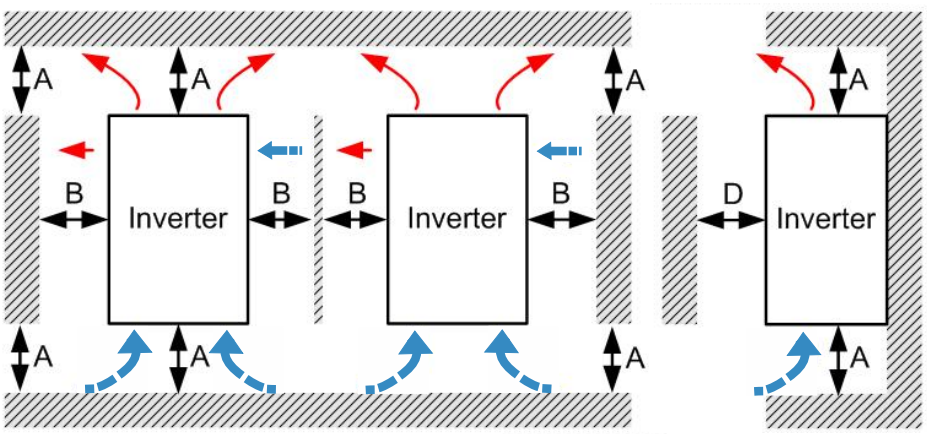

Multiple drives side-by-side vertical installation (Frame A~H)

Ta: Frame A~G Ta*: Frame H

When installing one AC motor drive below another one (top-bottom installation), use a metal separation between the drives to prevent mutual heating. The temperature measured at the fan's inflow side must be lower than the temperature measured at the operation side. If the fan's inflow temperature is higher, use a thicker or larger size of barrier. Operation temperature is the temperature measured at 50mm away from the fan's inflow side. (As shown in the figure below)

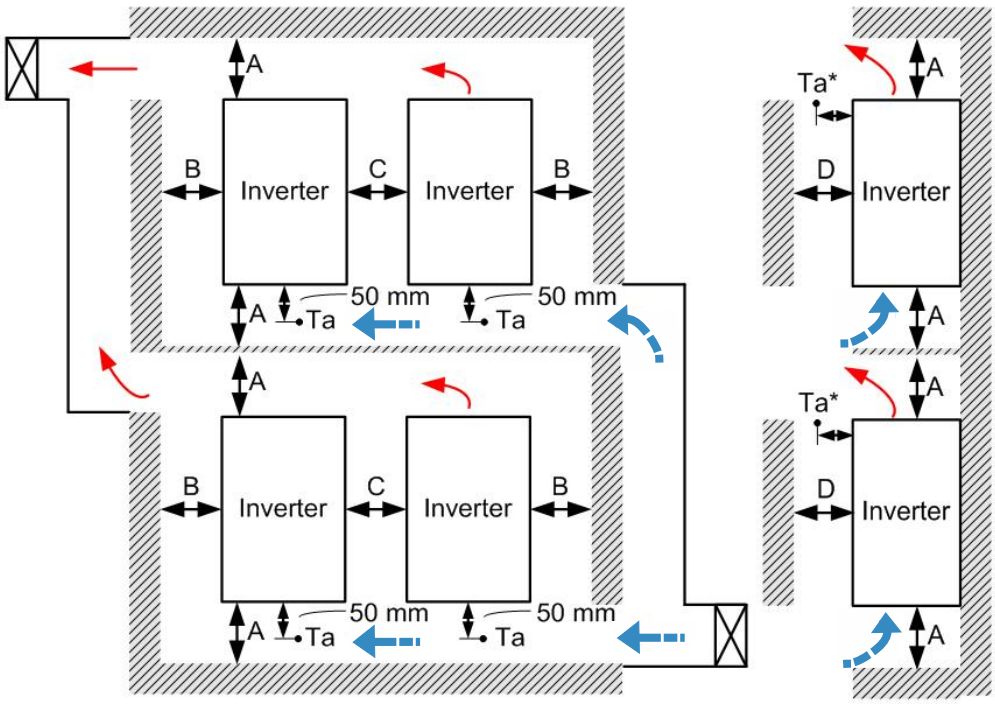

Frame	A (mm)	B (mm)	C (mm)	D (mm)
A~C	60	30	10	0
D~F	100	50	-	0
G	200	100	-	0
H	350	0	0	200 (100, Ta=Ta*=40°C)

Frame A	VFD015C53A-21; VFD022C53A-21; VFD037C53A-21
Frame B	VFD055C53A-21; VFD075C53A-21; VFD110C53A-21; VFD150C53A-21
Frame C	VFD185C63B-21; VFD220C63B-21; VFD300C63B-21; VFD370C63B-21
Frame D	VFD450C63B-00; VFD550C63B-00; VFD450C63B-21; VFD550C63B-21
Frame E	VFD750C63B-00; VFD900C63B-00; VFD1100C63B-00; VFD1320C63B-00; VFD750C63B-21; VFD900C63B-21; VFD1100C63B-21; VFD1320C63B-21
Frame F	VFD1600C63B-00; VFD2000C63B-00; VFD1600C63B-21; VFD2000C63B-21
Frame G	VFD2500C63B-00; VFD3150C63B-00; VFD2500C63B-21; VFD3150C63B-21
Frame H	VFD4000C63B-00; VFD4500C63B-00; VFD5600C63B-00; VFD6300C63B-00

NOTE

The minimum mounting clearances stated in the table above applies to AC motor drives frame A to D. A drive fails to follow the minimum mounting clearances may cause the fan to malfunction and heat dissipation problem.

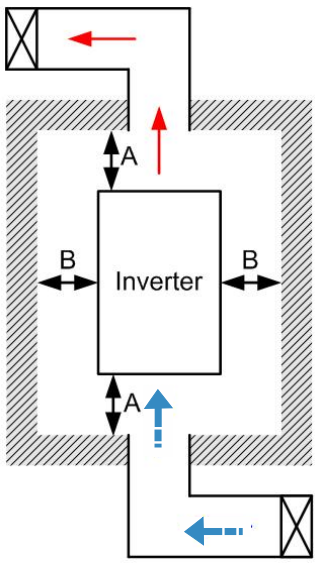

NOTE

※ The mounting clearances stated in the figure are for installing the drive in an open area. To install the drive in a confined space (such as cabinet or electric box), please follow the following three rules: (1) Keep the minimum mounting clearances. (2) Install a ventilation equipment or an air conditioner to keep surrounding temperature lower than operation temperature. (3) Refer to parameter setting and set up Pr. 00-16, Pr.00-17, and Pr. 06-55.

※ The following table shows the heat dissipation and the required air volume when installing a single drive in a confined space. When installing multiple drives, the required air volume shall be multiplied by the number the drives.

※ Refer to the chart (Air flow rate for cooling) for ventilation equipment design and selection.

※ Refer to the chart (Power dissipation) for air conditioner design and selection.

※ Different control mode will affect the derating. See Pr. 06-55 for more information.

※ Ambient temperature derating curve shows the derating status in different temperature in relation to different protection level.

※ If UL Type 1 models need side by side installation, please remove top cover of Frame A~C, and please do not install conduit box of Frame D and above.

Air flow rate for cooling							Power dissipation of AC motor drive		
Model No.	Flow Rate (cfm)			Flow Rate (m^3/hr)			Power Dissipation (W)		
	External	Internal	Total	External	Internal	Total	Loss External (Heat sink)	Internal	Total
VFD015C53A-21							39.5	13.0	53
VFD022C53A-21							55.0	22.0	77
VFD037C53A-21	0.006		0.006	13.6		13.6	86.8	42.7	130
VFD055C53A-21	0.019	0.007	0.026	40.0	14.5	54.5	124.6	67.9	193
VFD075C53A-21	0.019	0.007	0.026	40.0	14.5	54.5	143.5	119.0	263
VFD110C53A-21	0.019	0.007	0.026	40.0	14.5	54.5	222.2	162.8	385
VFD150C53A-21	0.019	0.007	0.026	40.0	14.5	54.5	308.5	216.5	525
VFD185C63B-21	90.0	21.3	111.4	153.0	36.2	189.2	317.5	145.0	462.5
VFD220C63B-21	90.0	21.3	111.4	153.0	36.2	189.2	408.2	141.8	550.0
VFD300C63B-21	90.0	21.3	111.4	153.0	36.2	189.2	492.7	257.3	750.0
VFD370C63B-21	89.0	21.3	110.3	151.2	36.2	187.5	641.6	283.4	925.0
VFD450C63B-00/21	175.9	36.4	212.3	298.8	61.8	360.6	718.2	406.8	1125.0
VFD550C63B-00/21	175.9	36.4	212.3	298.8	61.8	360.6	890.1	484.9	1375.0
VFD750C63B-00/211	264.6	90.6	355.2	449.6	153.9	603.5	1356.0	519.0	1875.0
VFD900C63B-00/21	264.6	90.6	355.2	449.6	153.9	603.5	1652.8	597.2	2250.0
VFD1100C63B-00/21	264.6	90.6	355.2	449.6	153.9	603.5	1960.3	789.7	2750.0
VFD1320C63B-00/21	264.6	90.6	355.2	449.6	153.9	603.5	2230.8	1069.2	3300.0
VFD1600C63B-00/21	248.1	135.3	383.4	421.6	229.9	651.4	2627.3	1372.7	4000.0
VFD2000C63B-00/21	248.1	135.3	383.4	421.6	229.9	651.4	3415.0	1585.0	5000.0
VFD2500C63B-00/21			409.7			696.0	4751.7	1498.3	6250.0
VFD3150C63B-00/21			409.7			696.0	5695.4	2179.6	7875.0
VFD4000C63B-00/21			563.0			956.4	6796.2	3203.8	10000.0
VFD4500C63B-00/21			952.9			1618.9	7313.6	3936.4	11250.0
VFD5600C63B-00/21			952.9			1618.9	9553.4	4446.6	14000.0
VFD6300C63B-00 VFD6300C63B-21			952.9			1618.9	11042.4	4707.6	15750.0

※ The required airflow shown in chart is for installing single drive in a confined space.

※ When installing the multiple drives, the required air volume should be the required air volume for single drive X the number of the drives.

※ The heat dissipation shown in the chart is for installing single drive in a confined space.

※ When installing the multiple drives, volume of heat dissipation should be the heat dissipated for single drive X the number of the drives.

※ Heat dissipation for each model is calculated by rated voltage, current and default carrier.

Derating Curve of Altitude and Ambient Temperature

Operating Altitude Above Sea Level	Current Derating at Various Ambient Temperature (Inlet Air Temperature)		
@UL Open Type/ IP20	40°C	45°C	50°C
@NEMA1 / UL Type 1	30°C	35°C	40°C
0-1000	100 %		
1001-1500			95%
1501-2000		95%	90%

Derating Curve of Ambient Temperature

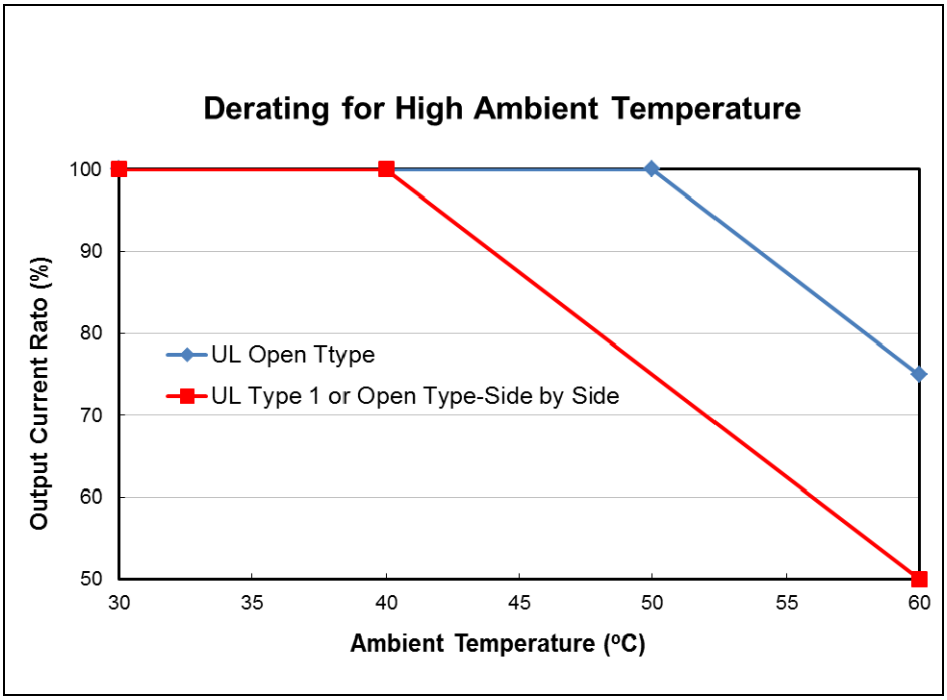

Derating Curve

600V models derating curve

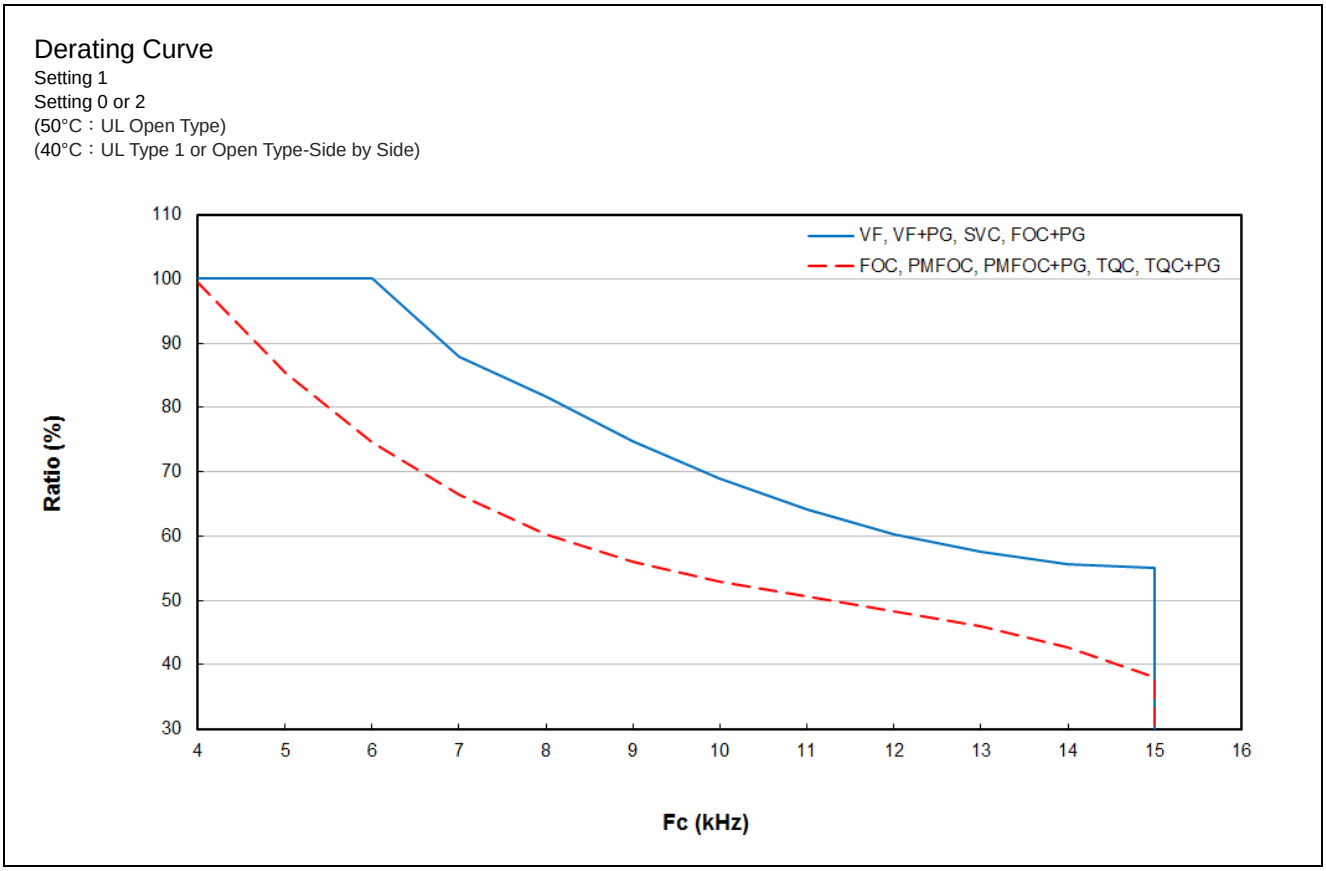

690V models derating curve

Normal control ambient temperature derating curve

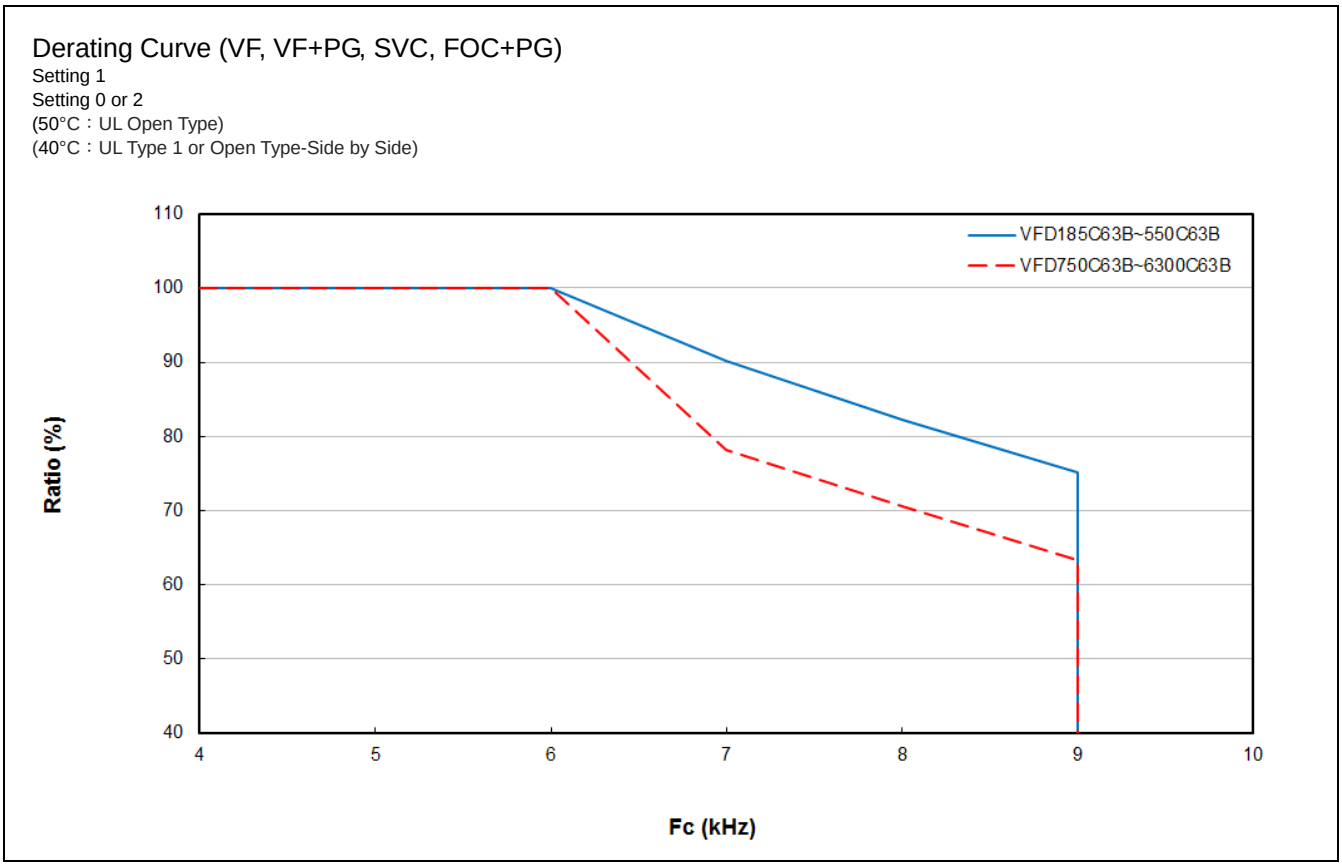

Advanced control Ambient temperature derating curve

Derating Curve (FOC, PMFOC, PMFOC+PG, TQC, TQC+PG)
Setting 1
Setting 0 or 2
(50°C：UL Open Type)
(40°C：UL Type 1 or Open Type-Side by Side)

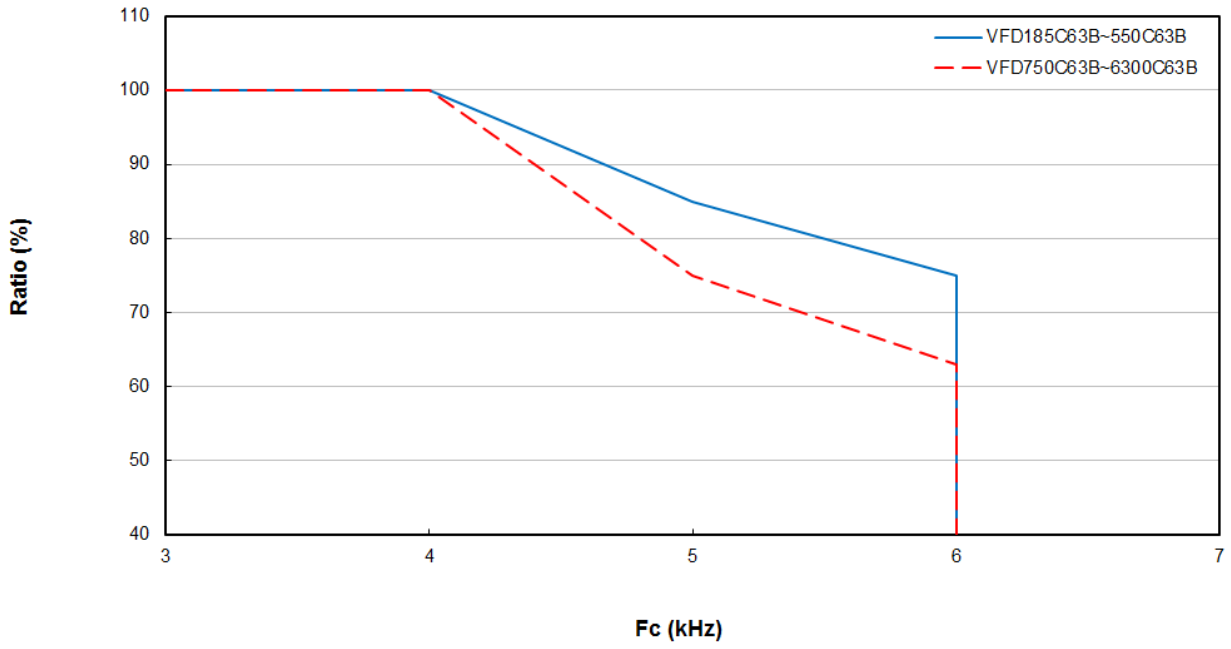

[This page intentionally left blank]

Chapter 3 Moving & Unpacking

3-1 Unpacking

3-2 The Lifting Hook

The AC motor drive should be kept in the shipping carton or crate before installation. In order to retain the warranty coverage, the AC motor drive should be stored properly when it is not to be used for an extended period of time.

3-1 Unpacking

The AC motor drive is packed in the crate. Follows the following step for unpack:

Frame D	
Crate 1 (VFDXXXC63B-00) Loosen the 12 cover screws to open the crate. 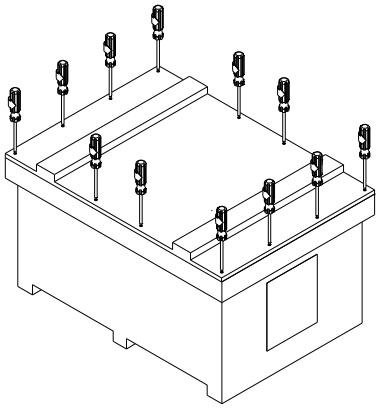	Crate 2 (VFDXXXC63B-21) Loosen the 4 screws on the iron plates. There are 4 iron plates and in total of 16 screws. 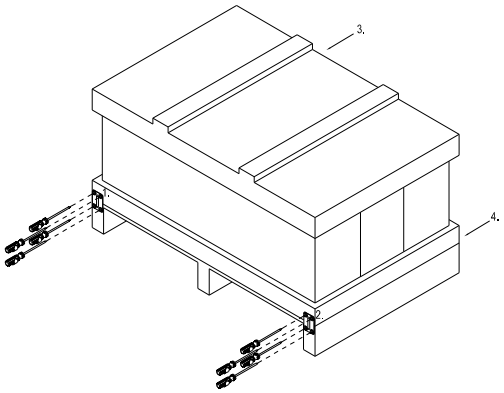
Remove the EPEs and manual. 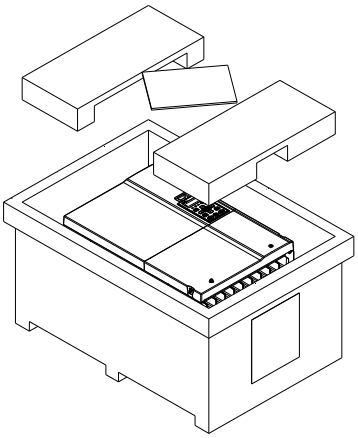	Remove the crate cover, EPEs, rubber and manual. 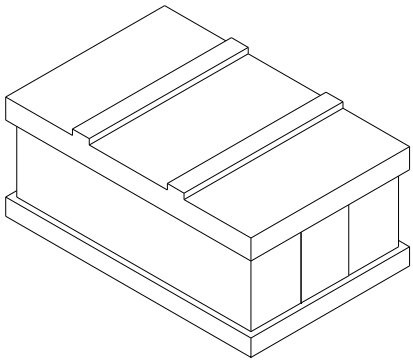
Loosen the 8 screws that fastened on the pallet and remove the wooden plate. 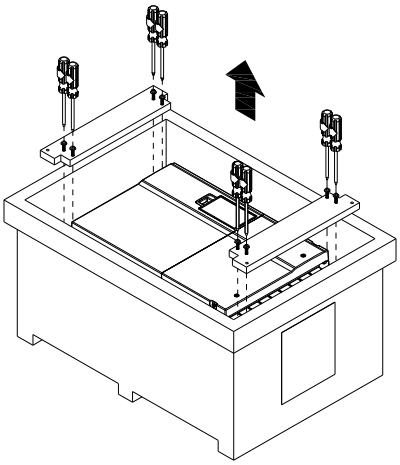	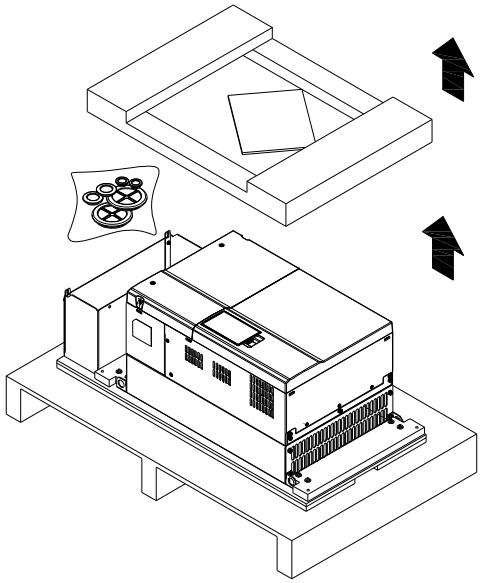

Lift the drive by hooking the lifting hole. It is now ready for installation.

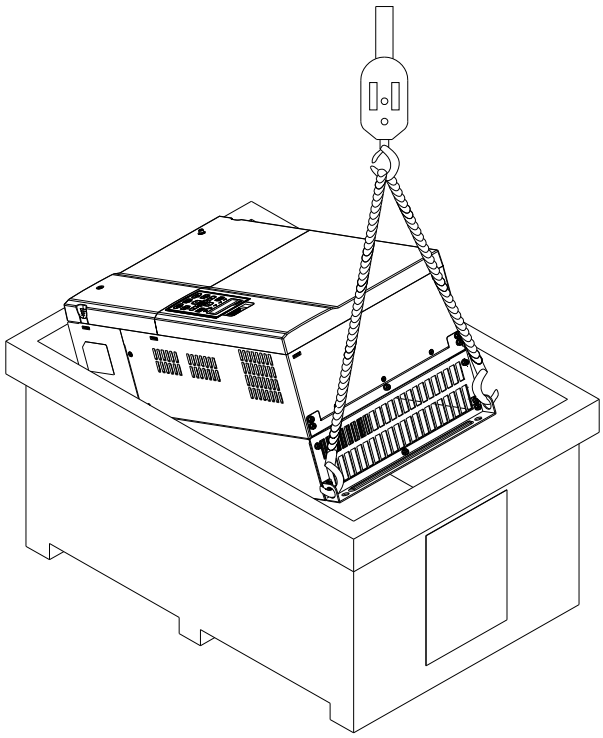

Loosen the 10 screws on the pallet, remove the wooden plate.

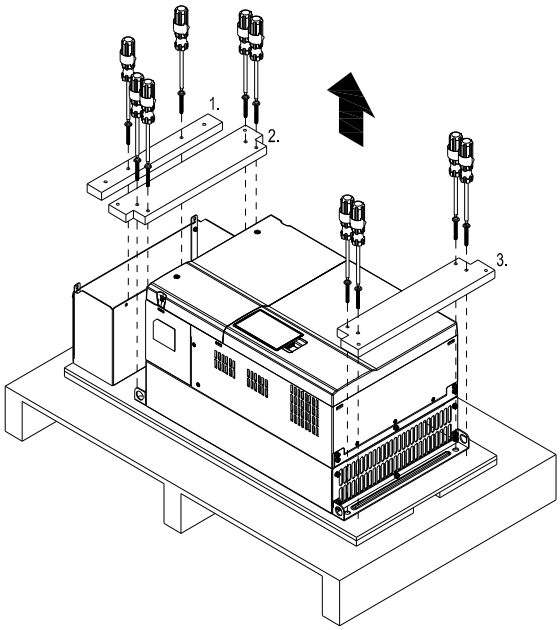

Lift the drive by hooking the lifting hole. It is now ready for installation.

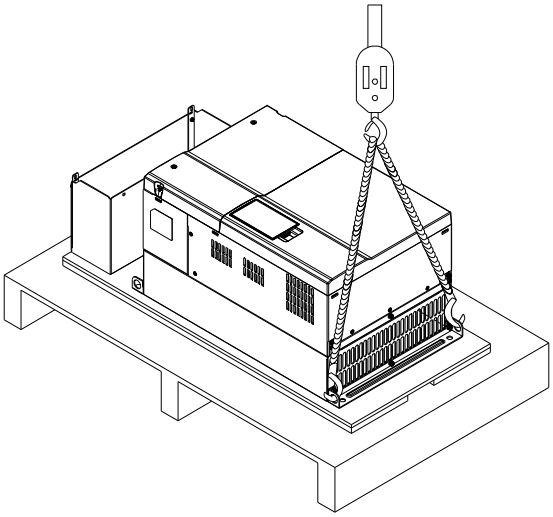

Frame E

Crate 1 (VFDXXXC63B-00)

Loosen the 4 screws on the iron plates. There are 4 iron plates and in total of 16 screws.

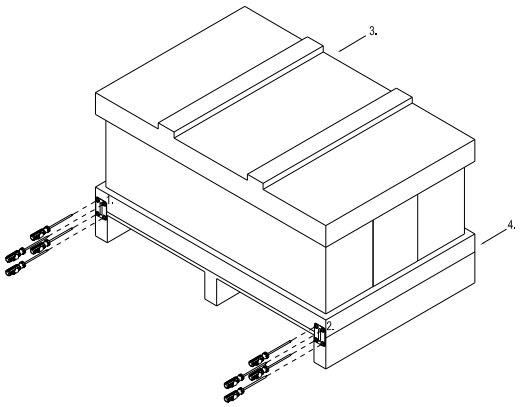

Crate 2 (VFDXXXC63B-21)

Loosen the 4 screws on the iron plates. There are 4 iron plates and in total of 16 screws.

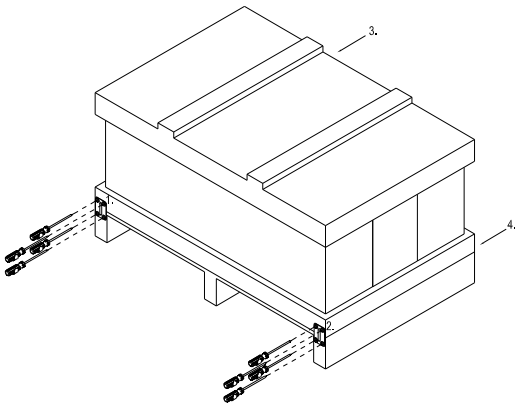

Remove the crate cover, EPEs and manual. 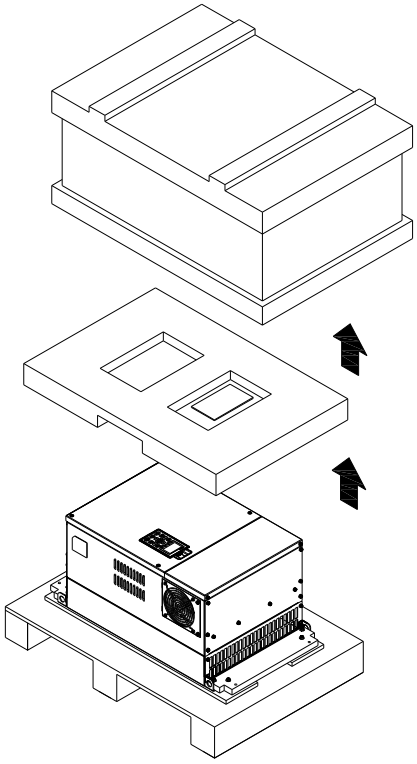	Remove the crate cover, EPEs, rubbers and manual. 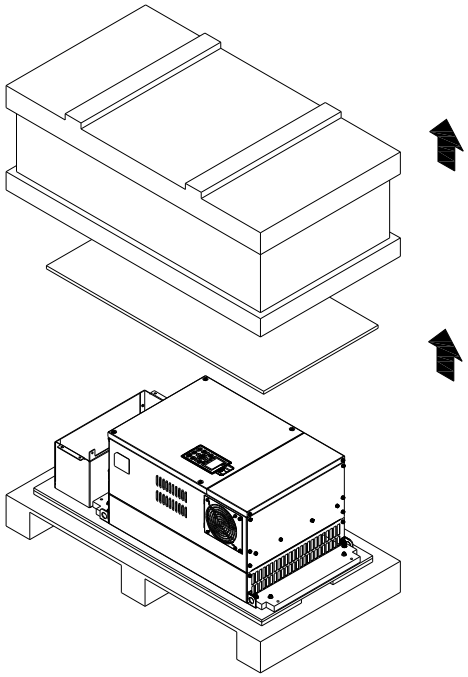
Loosen the 8 screws on the pallet as shown in the following figure. 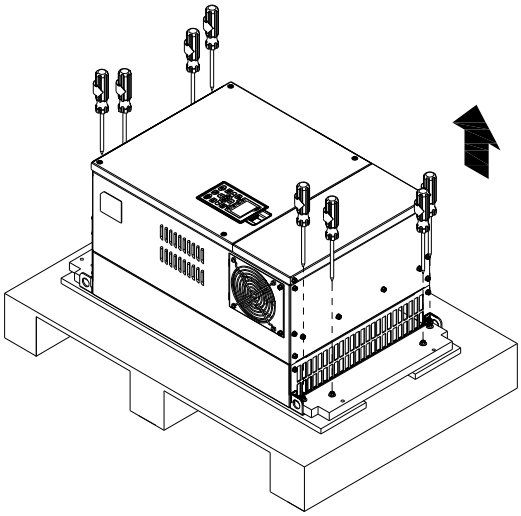	Loosen the 10 screws on the pallet and remove the wooden plate. 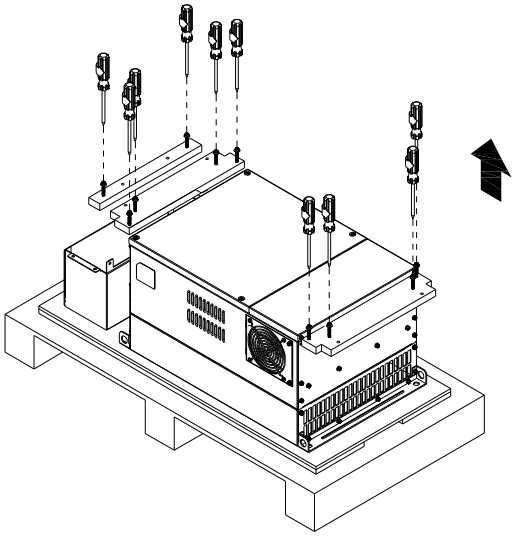
Lift the drive by hooking the lifting hole. It is now ready for installation. 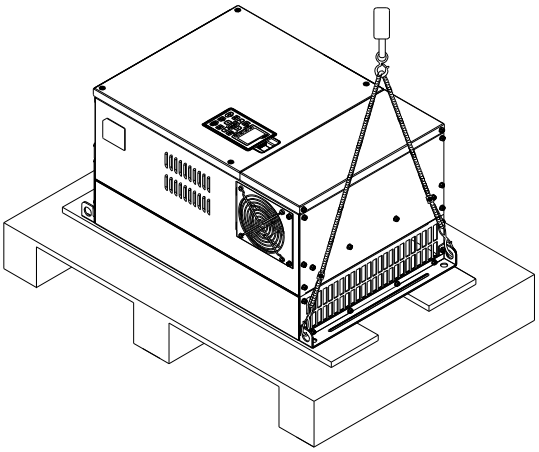	Lift the drive by hooking the lifting hole. It is now ready for installation. 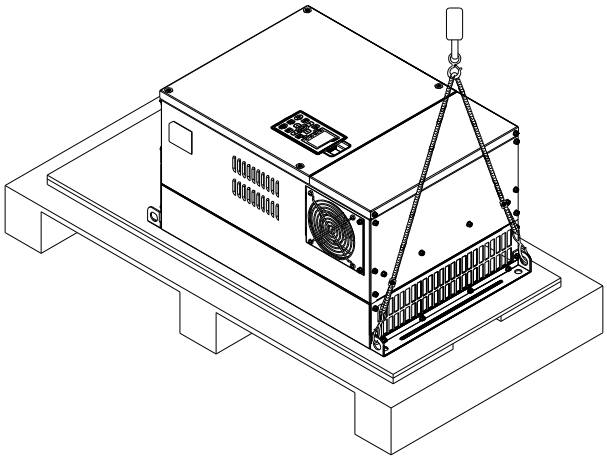

Frame F

Crate 1 (VFDXXXC63B-00)

Remove the 6 clips on the side of the crate with a flat-head screwdriver. (As shown in figure below.)

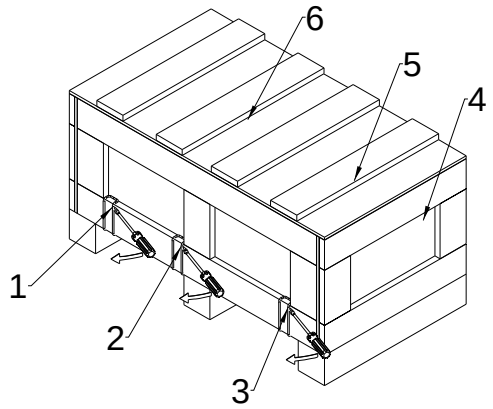

Crate 2 (VFDXXXC63B-21)

Remove the 6 clips on the side of the crate with a flat-head screwdriver. (As shown in figure below.)

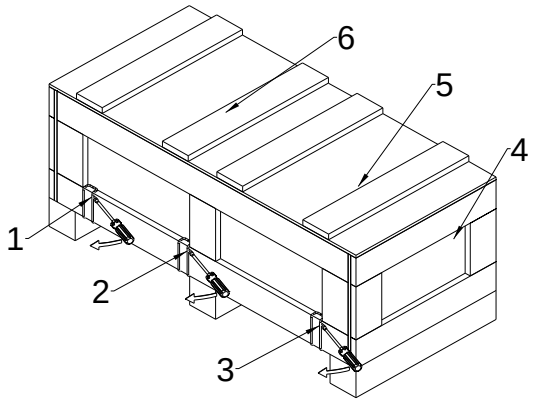

Remove the crate cover, EPEs and manual.

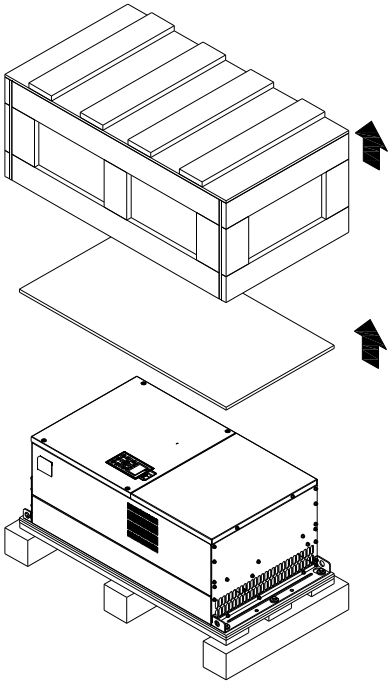

Remove the crate cover, EPEs, rubbers and manual.

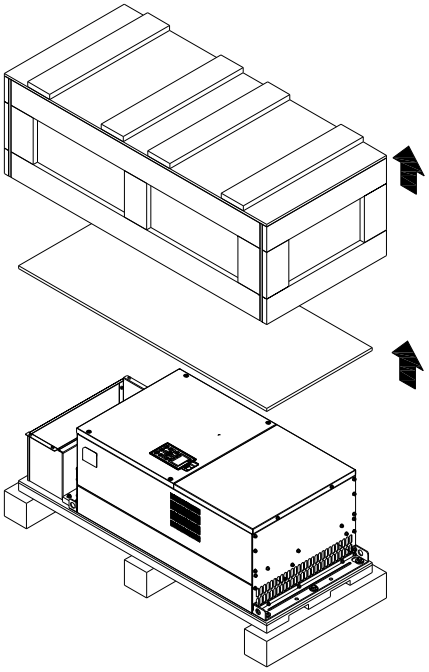

Loosen the 5 screws on the pallet as shown in the following figure.

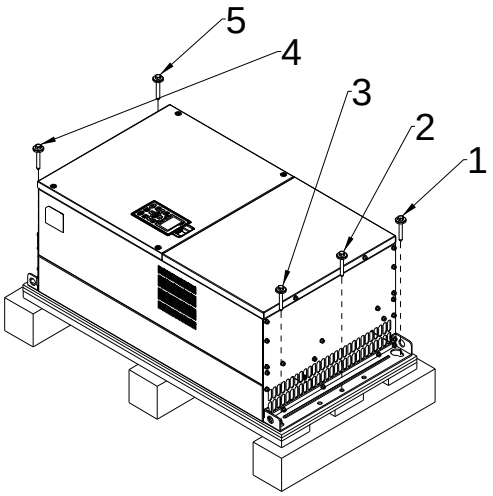

Loosen the 9 screws on the pallet and remove the wooden plate.

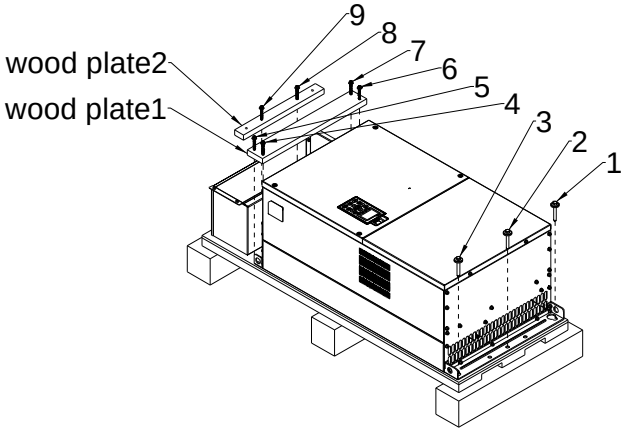

Lift the drive by hooking the lifting hole. It is now ready for installation 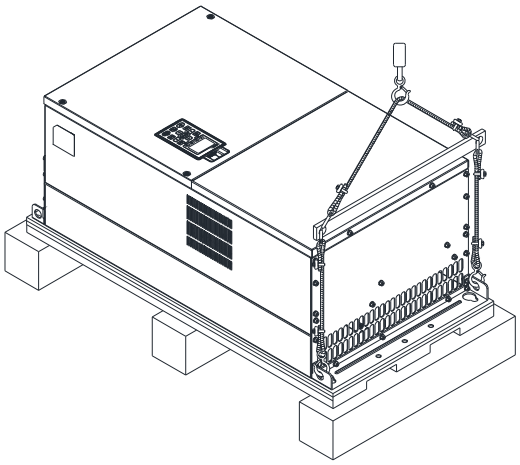 .	Lift the drive by hooking the lifting hole. It is now ready for installation. 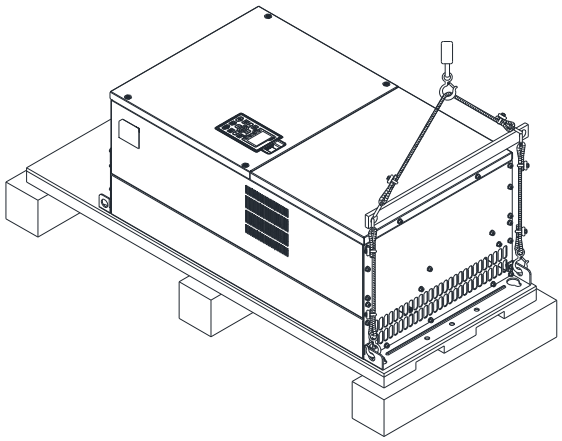
Frame G	
Crate 1 (VFDXXXC63B-00) Remove the 6 clips on the side of the crate with a flathead screwdriver. (As shown in figure below.) 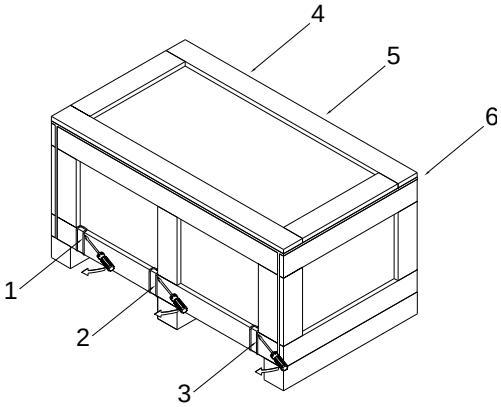 	Crate 2 (VFDXXXC63B-21) Remove the 6 clips on the side of the crate with a flathead screwdriver. (As shown in figure below.) 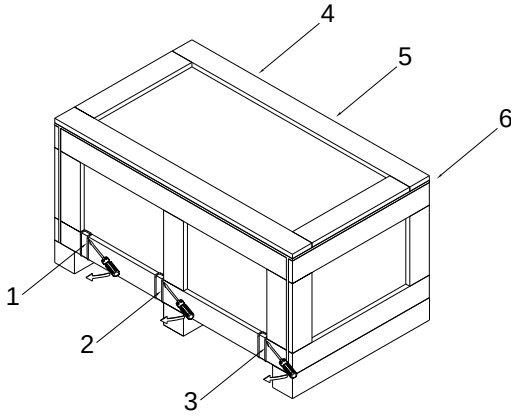
Remove the crate cover, EPEs and manual. 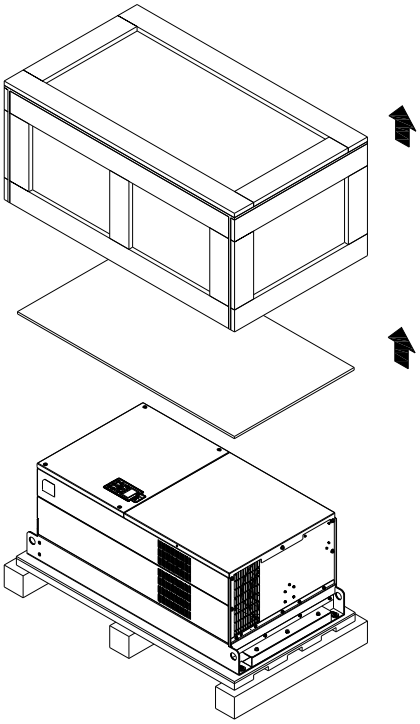	Remove the crate cover, EPEs, rubber and manual. 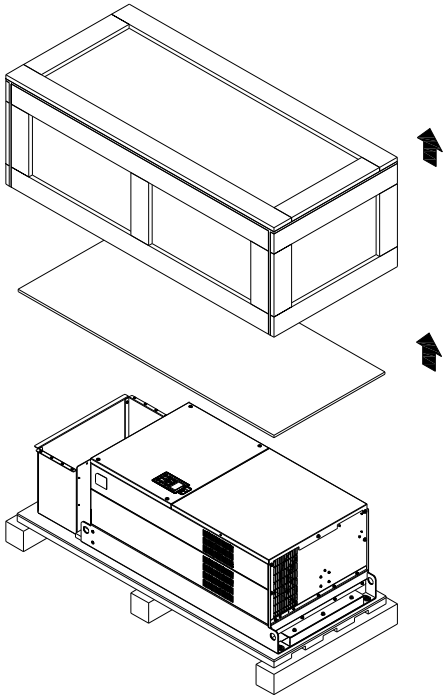

Loosen the 5 screws as shown in following figure:

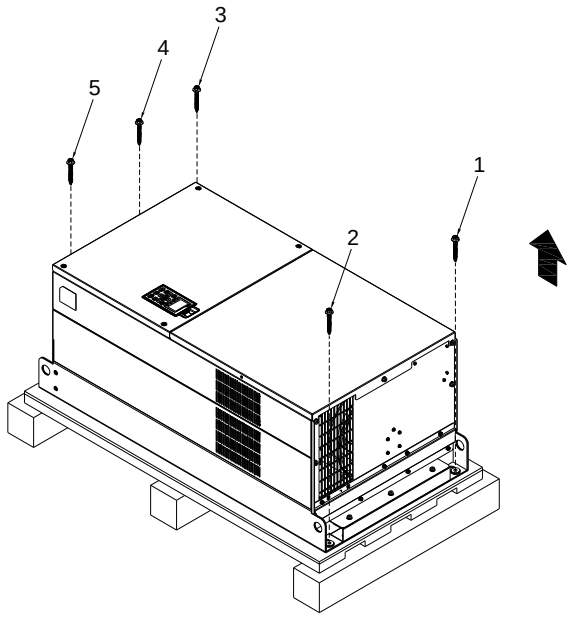

Loosen the 12 screws and remove the wooden plate.

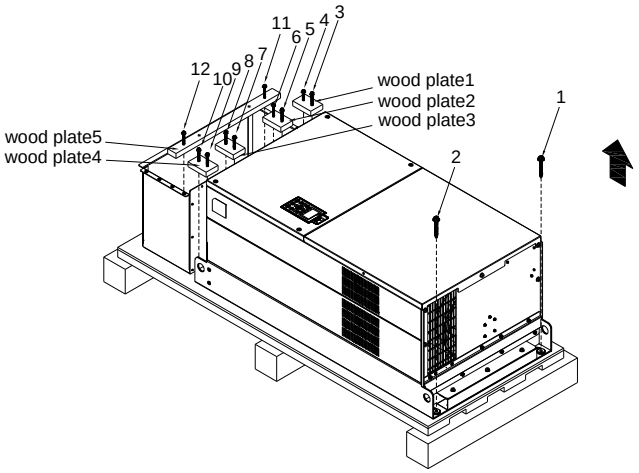

Lift the drive by hooking the lifting hole. It is now ready for installation.

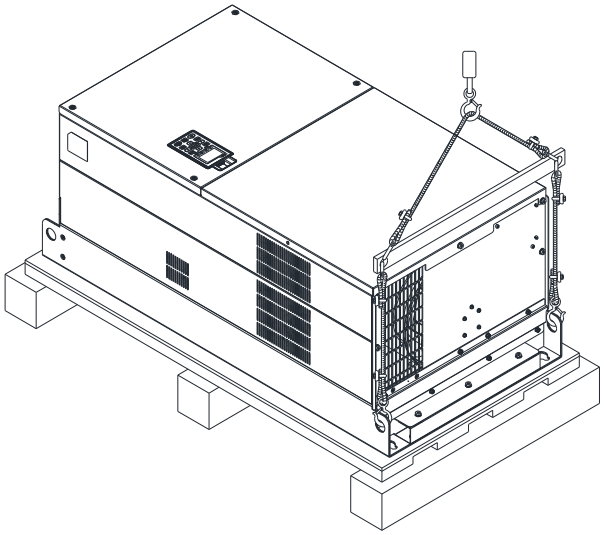

Lift the drive by hooking the lifting hole. It is now ready for installation.

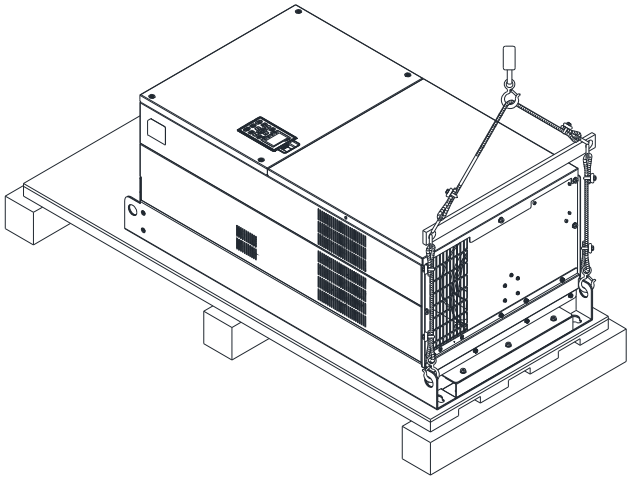

Frame H

Crate 1 (VFDXXXC63B-00)

Remove the 8 clips on the side of the crate with a flathead screwdriver. (As shown in figure below.)

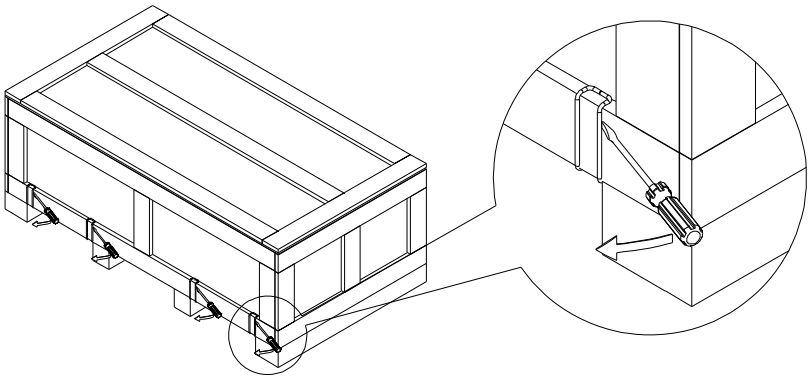

Remove the crate cover, EPEs and manual.

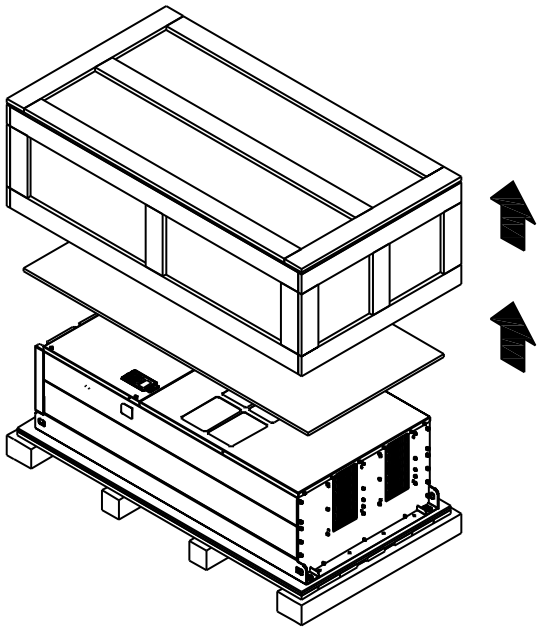

Loosen the 6 screws on the top then remove 6 metal washers and 6 plastic washers as shown in figure below.

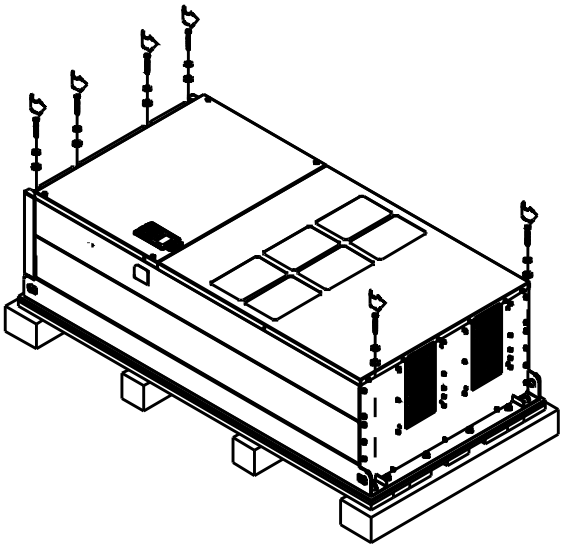

Lift the drive by hooking the lifting hole. It is now ready for installation.

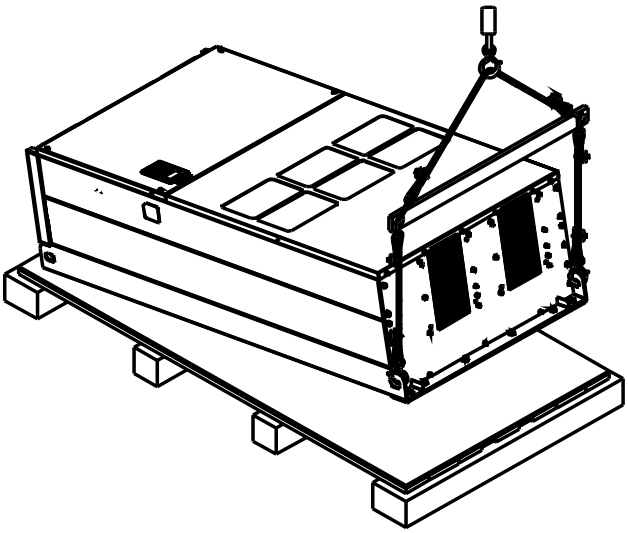

Frame H

Crate 2 (VFDXXXC63B-21)

Use flathead screwdriver to remove the clips on the side of the crate, 8 clips in total.

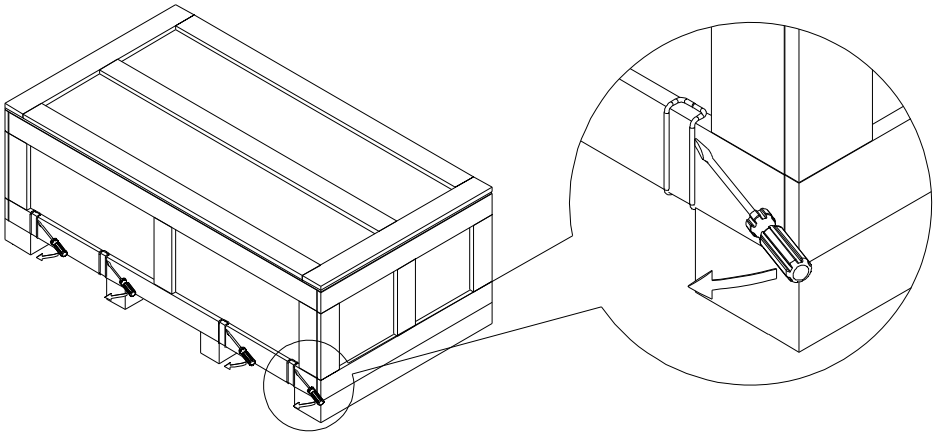

Remove the crate cover, EPEs, rubber and manual.

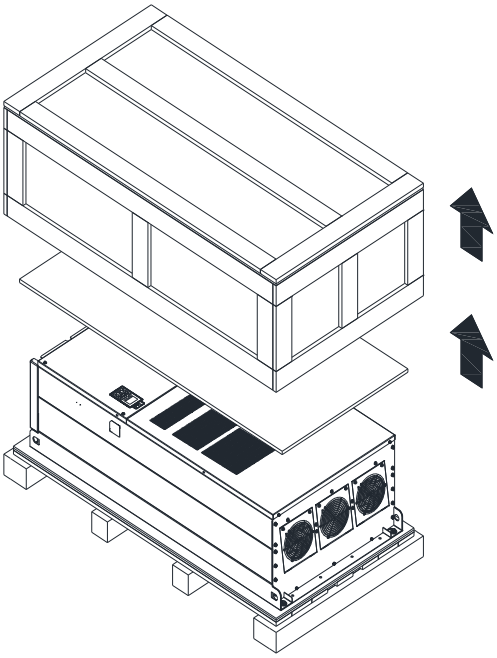

Loosen the 6 screws on the cover, remove 6 metal washers and 6 plastic washers as shown in below:

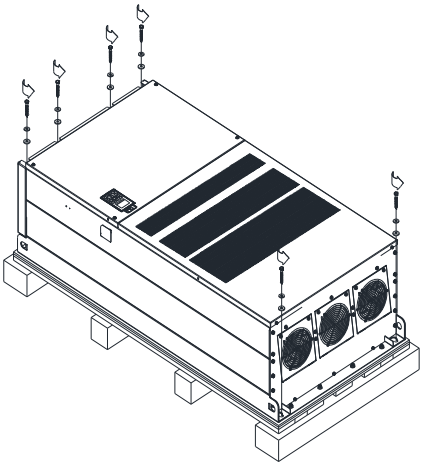

Loosen 6 of the M6 screws on the side and removes the 2 plates, as shown in following figure. The removed screws and plates can be used to secure AC motor drive from the external.

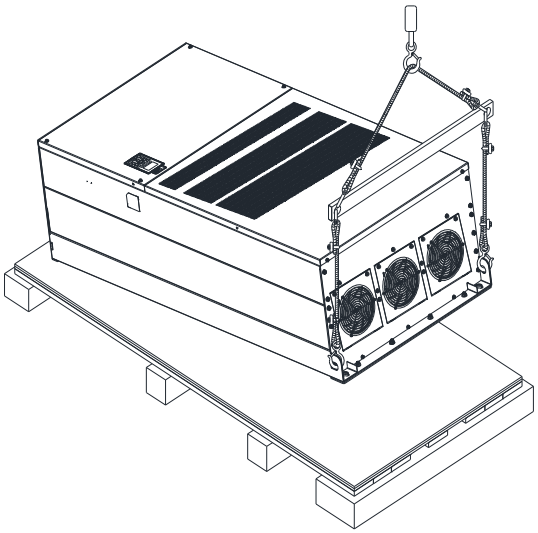

Secure the drive from the internal.

Loosen 18 of the M6 screws and remove the top cover as shown in figure 2. Mount the cover (figure 1) back to the drive by fasten the M6 screws to the two sides of the drive, as shown in figure 2.

Torque: 35~45kg-cm (30.38~39.06lb-in.)
(3.43~3.92 Nm)

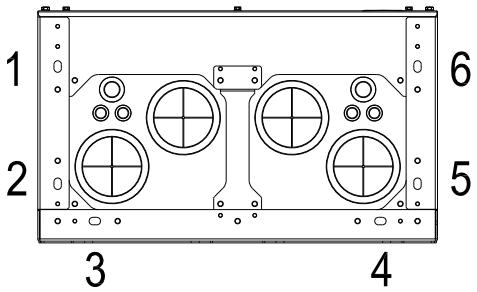

Figure 1
Top cover (Use M12 screws)

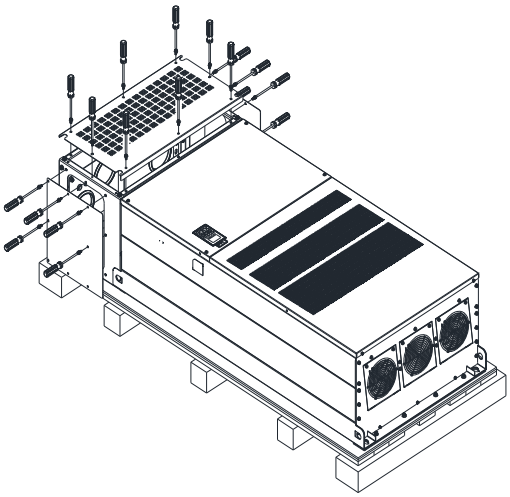

Figure 2

Secure the drive from the external.

Loosen 8 of the M8 screws on the both sides and place the 2 plates that were removed from the last step. Fix the plates to rive by fasten 8 of the M8 screws. (As shown in figure below).

Torque: 150~180kg-cm (130.20~156.24lb-in.)
(14.7~17.64 Nm)

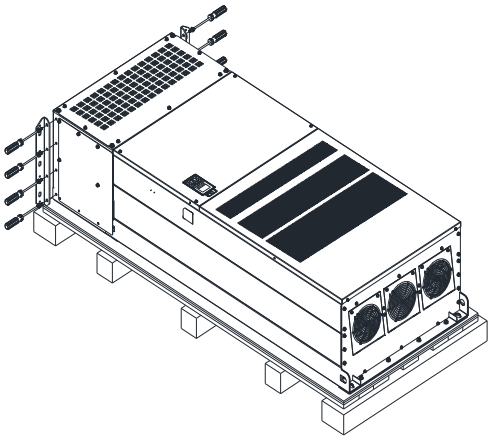

Fasten 6 of the M6 screws back to the original position where it was removed. As shown in the figure: 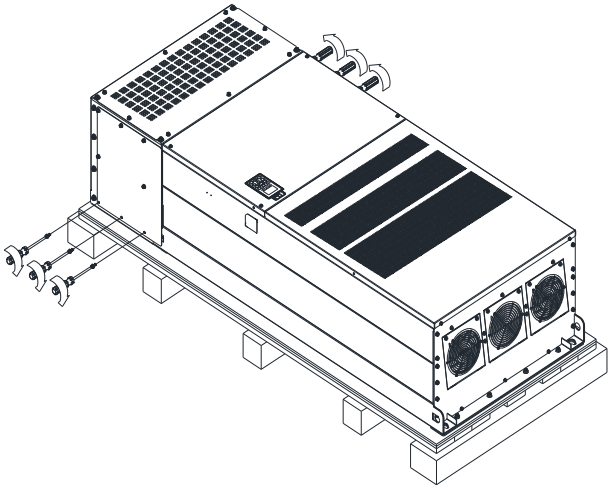
Lift the drive by hooking the lifting hole. It is now ready for installation. 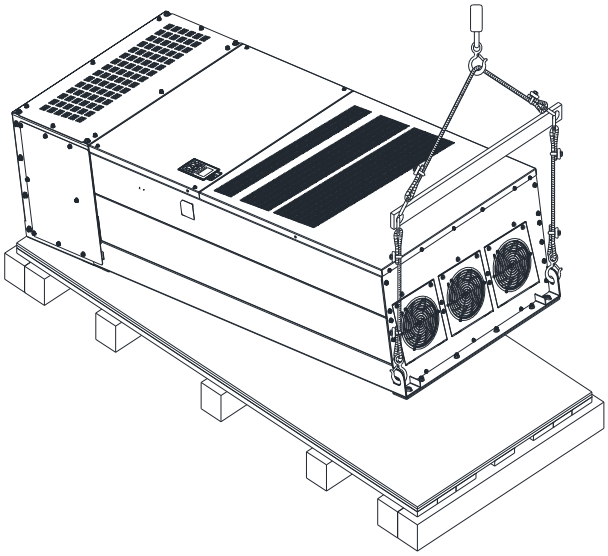

Frame H Secure the drive

(VFDXXXC63B-00)

Screw: M12*6

Torque: 340-420kg-cm [295.1-364.6lb-in.] (33.32~41.16 Nm)

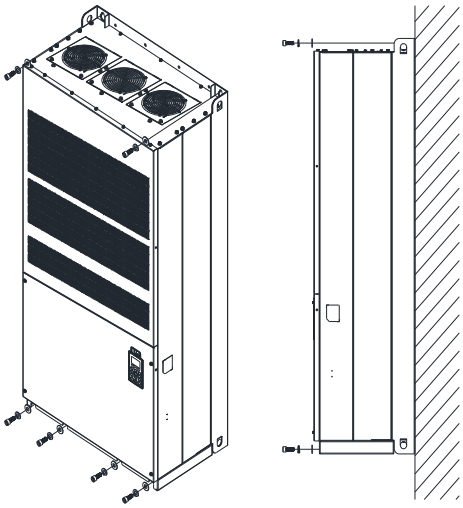

(VFDXXXC63B-21)

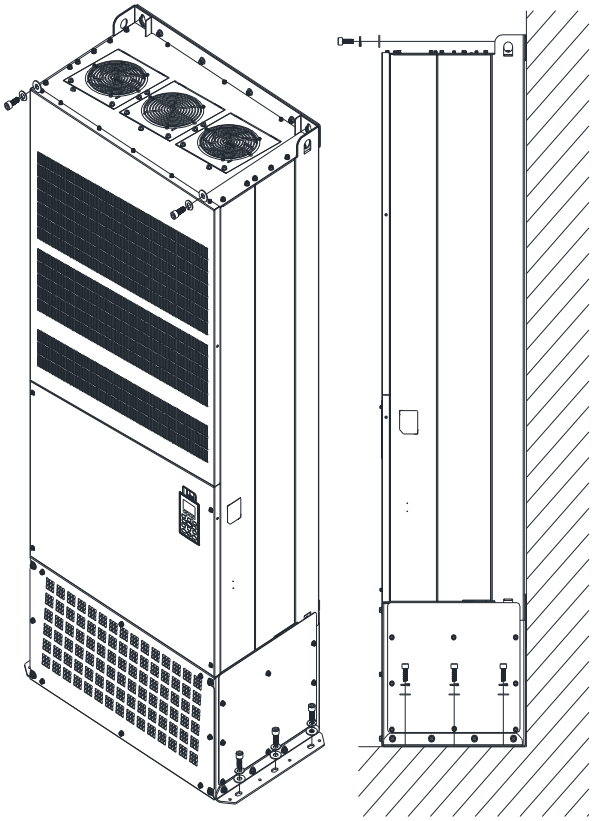

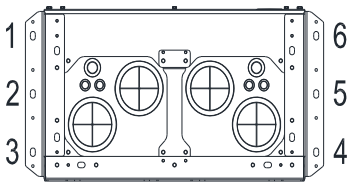

Secure the drive from the external.

Screw: M12*8

Torque: 340-420kg-cm [295.1-364.6lb-in.]

(33.32~41.16 Nm)

3-2 The Lifting Hook

The arrows indicate the location of the lifting holes of frame D to H, as shown in figure below:

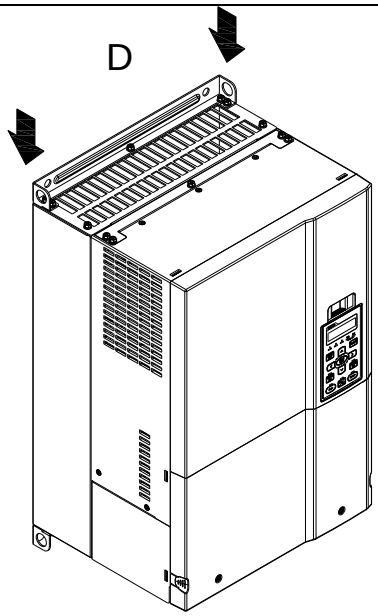

Figure 1

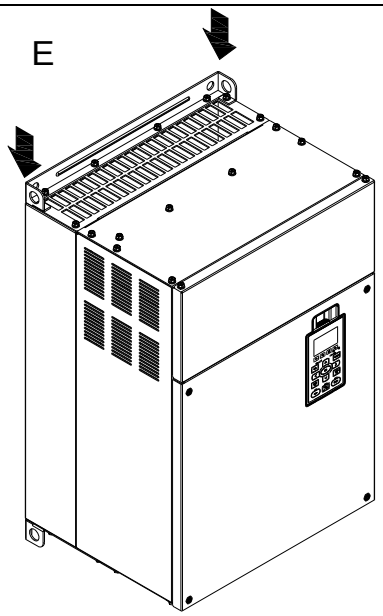

Figure 2

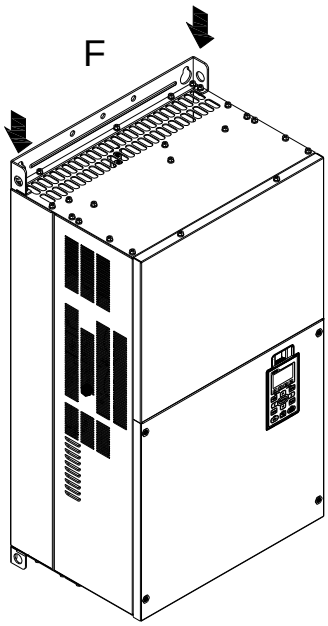

Figure 3

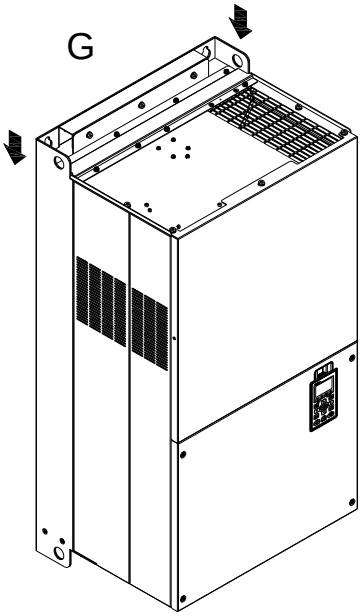

Figure 4

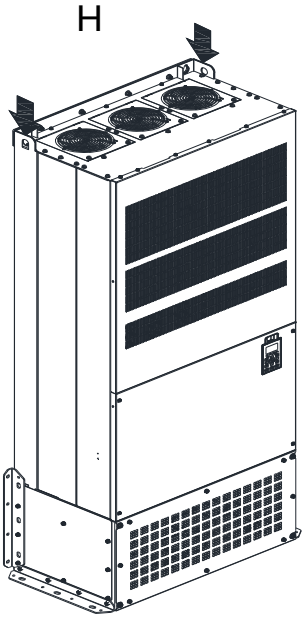

Figure 5

Ensure the lifting hook properly goes through the lifting hole, as shown in the following diagram.

(Applicable to Frame D~E)

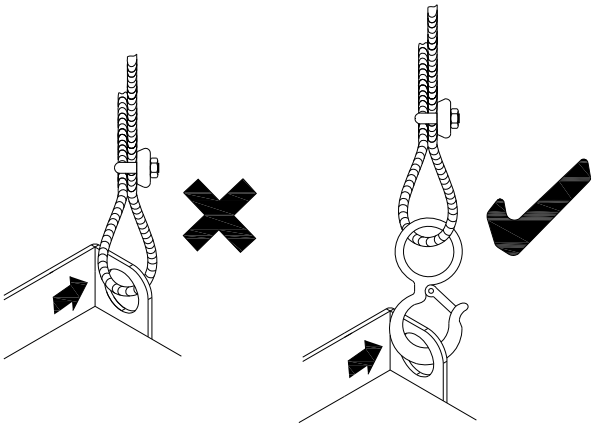

(Applicable to Frame F~H)

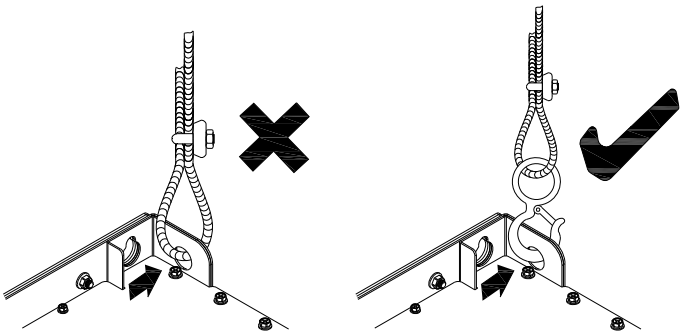

Ensure the angle between the lifting holes and the lifting device is within the specification, as shown in the following figure.

(Applicable to Frame D~E)

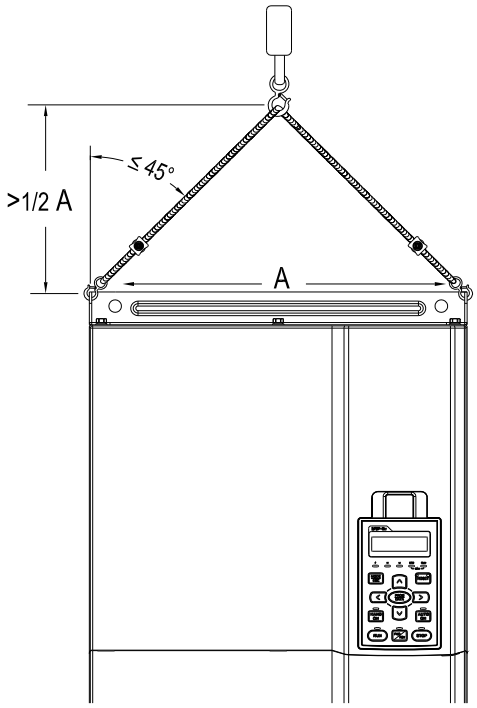

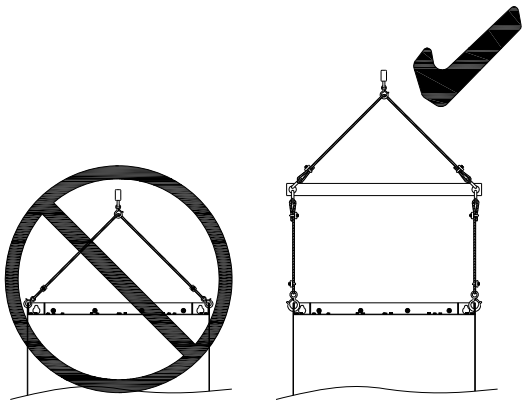

(Applicable to Frame F~H)

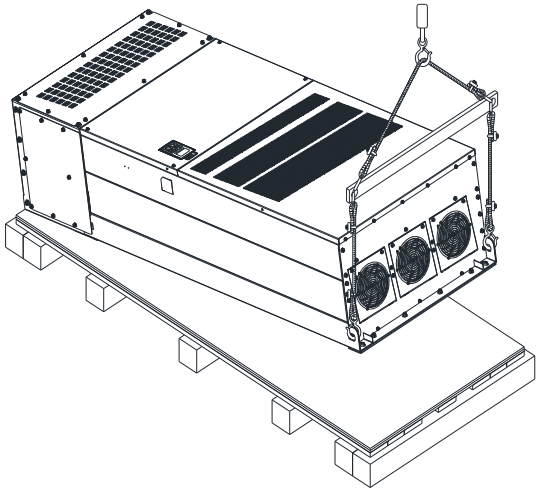

Weight

FRAME D
VFDXXXC63B-00 39.0kg(86.0 lbs)

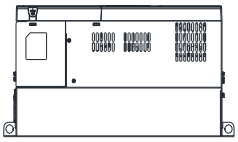

FRAME D
VFDXXXC63B-21 41.4kg(91.3 lbs)

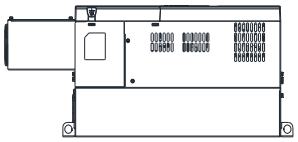

FRAME E
VFDXXXC63B-00 61.0kg(134.5 lbs)

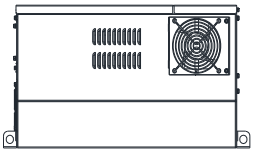

FRAME E
VFDXXXC63B-21 63.4kg(139.8 lbs)

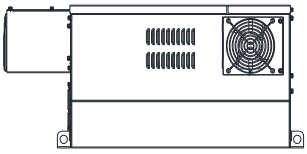

FRAME F
VFDXXXC63B-00 88.0kg(194.0 lbs)

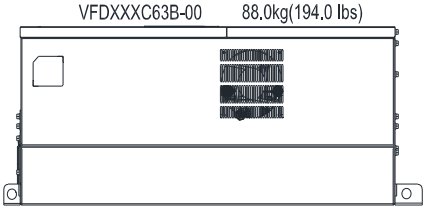

FRAME F
VFDXXXC63B-21 91.0kg(200.7 lbs)

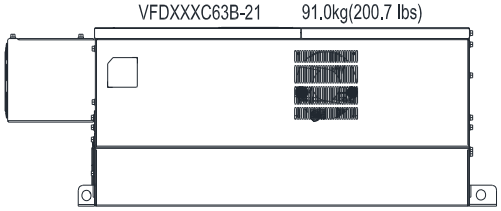

FRAME G
VFDXXXC63B-00 135.0kg(297.6 lbs)

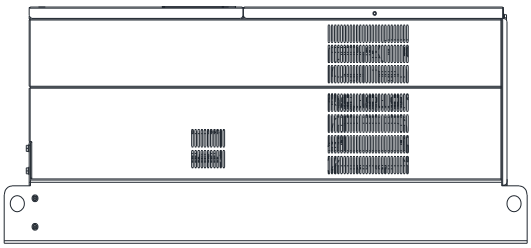

FRAME G
VFDXXXC63B-21 143.0kg(315.3 lbs)

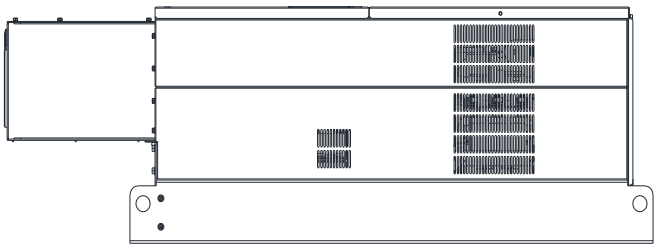

FRAME H
VFDXXXC63B-00 243.0kg(535.7 lbs)

FRAME H
VFDXXXC63B-21 251.0kg(553.5 lbs)

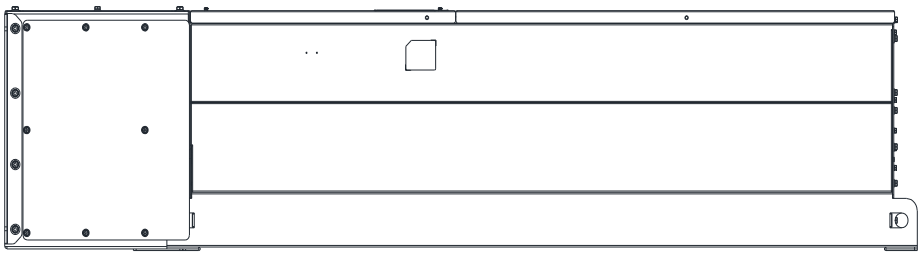

[The page intentionally left blank]

Chapter 4 Wiring

4-1 Wiring

4-2 System Wiring Diagram

After removing the front cover, please check if the power and control terminals are clearly noted. Please read following precautions to avoid wiring mistakes.

DANGER	■ It is crucial to **cut off the AC motor drive power** before any wiring. A charge may still remain in the DC bus capacitors with hazardous voltages even if the power has been turned off only after a short time. Therefore it is suggested measure the remaining voltage by DC voltmeter before wiring. For your personnel safety, please do not start wiring before the voltage drops to a safe level < 25 Vdc. Wiring installation with remain voltage condition may cause sparks and short circuit. ■ Only qualified personnel familiar with AC motor drives is allowed to perform installation, wiring and commissioning. Make sure the power is turned off before wiring to prevent electric shock. ■ The main circuit terminals R/L1、S/L2、T/L3 is for power input. If the power is wrongly connected to others terminals, it may result in damage to the equipment. The voltage and current should lie within the range as indicated on the nameplate (Chapter 1-1). ■ All the units must be grounded directly to a common ground terminal to prevent lightning strike or electric shock. ■ Please make sure to tighten the screw of the main circuit terminals to prevent sparks due to the loosening of vibrations.
CAUTION	☑ When wiring, please choose the wires with specification that complies with local regulation for your personnel safety. ☑ Check following items after finishing the wiring: 1. Are all connections correct? 2. Any loosen wires? 3. Any short-circuits between the terminals or to ground?

4-1 Wiring

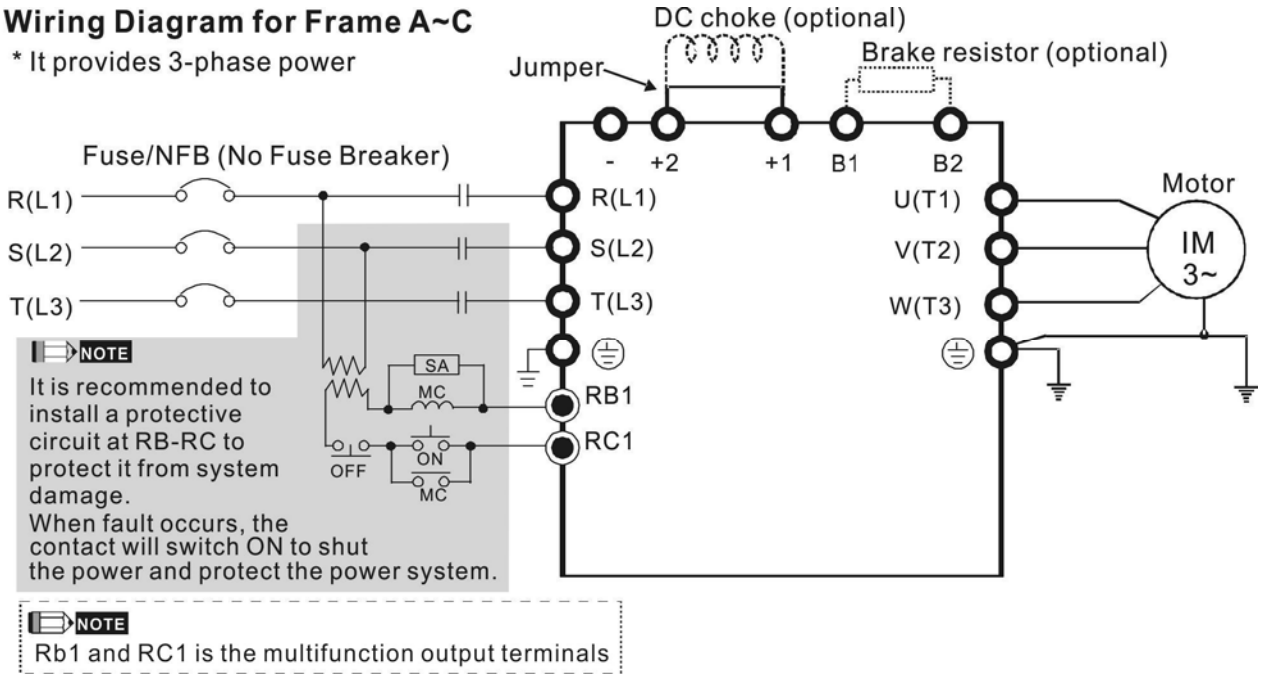

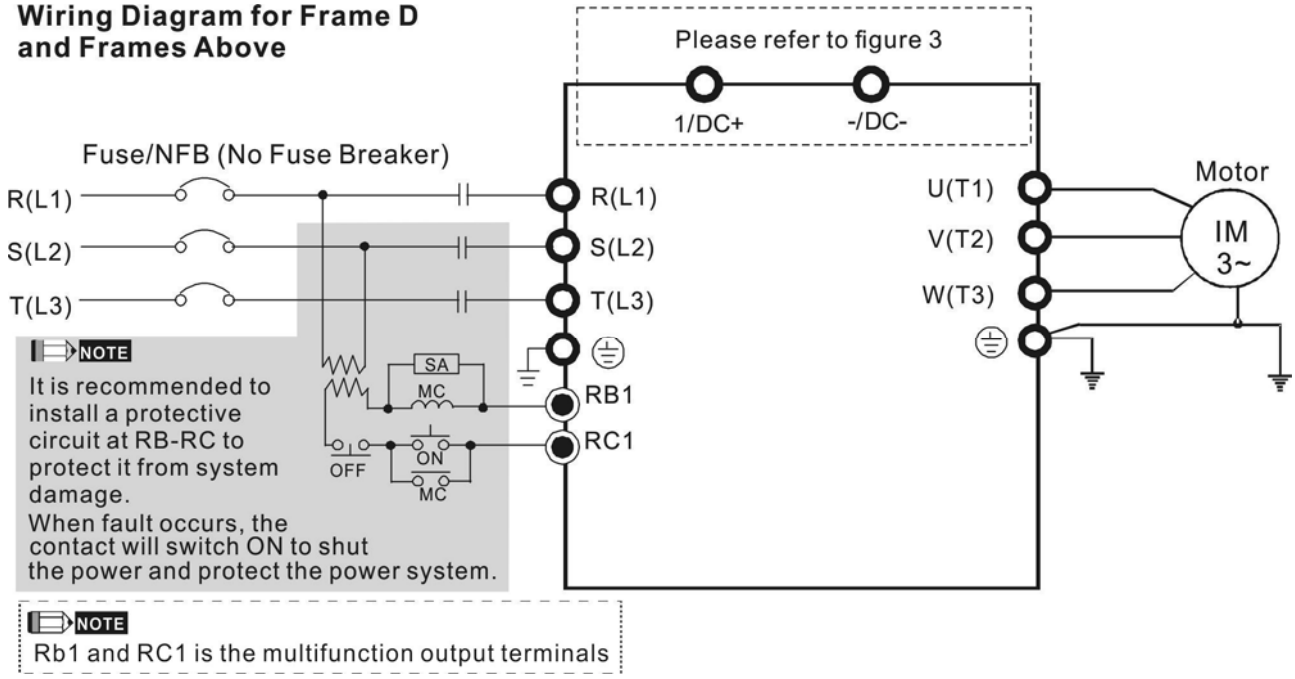

*1 Please refer to Chart 3 for DC link wiring

*2 Please refer to Chapter 7-1 for brake units and resistors selection

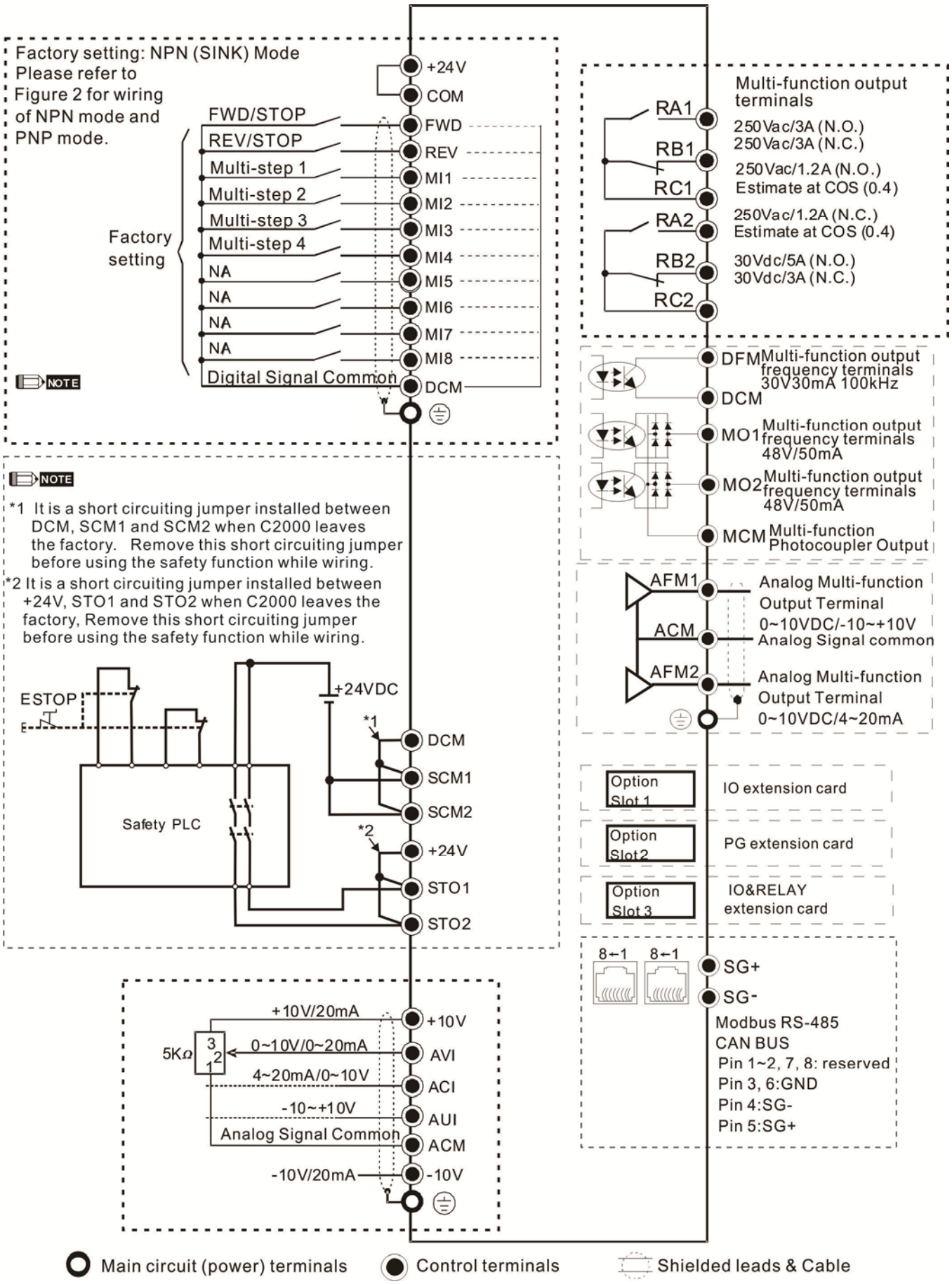
Factory setting: NPN (SINK) Mode
Please refer to
Figure 2 for wiring
of NPN mode and
PNP mode.
+24V
COM
FWD/STOP
REV/STOP
Multi-step 1
Multi-step 2
Multi-step 3
Multi-step 4
NA
NA
NA
NA
Factory setting
FWD
REV
MI1
MI2
MI3
MI4
MI5
MI6
MI7
MI8
Digital Signal Common
DCM
NOTE
Multi-function output terminals
RA1
RB1
RC1
RA2
RB2
RC2
250Vac/3A (N.O.)
250Vac/3A (N.C.)
250Vac/1.2A (N.O.)
Estimate at COS (0.4)
250Vac/1.2A (N.C.)
Estimate at COS (0.4)
30Vdc/5A (N.O.)
30Vdc/3A (N.C.)
DFM
DCM
Multi-function output frequency terminals 30V30mA 100kHz
MO1
Multi-function output frequency terminals 48V/50mA
MO2
Multi-function output frequency terminals 48V/50mA
MCM
Multi-function Photocoupler Output
NOTE
*1 It is a short circuiting jumper installed between DCM, SCM1 and SCM2 when C2000 leaves the factory. Remove this short circuiting jumper before using the safety function while wiring.
*2 It is a short circuiting jumper installed between +24V, STO1 and STO2 when C2000 leaves the factory, Remove this short circuiting jumper before using the safety function while wiring.
AFM1
ACM
AFM2
Analog Multi-function Output Terminal 0~10VDC/-10~+10V
Analog Signal common
Analog Multi-function Output Terminal 0~10VDC/4~20mA
ESTOP
+24VDC
*1
DCM
SCM1
SCM2
Safety PLC
*2
+24V
STO1
STO2
Option Slot 1
IO extension card
Option Slot 2
PG extension card
Option Slot 3
IO&RELAY extension card
8←1
8←1
SG+
SG-
Modbus RS-485
CAN BUS
Pin 1~2, 7, 8: reserved
Pin 3, 6:GND
Pin 4:SG-
Pin 5:SG+
+10V/20mA
+10V
5KΩ
0~10V/0~20mA
AVI
4~20mA/0~10V
ACI
-10~+10V
AUI
Analog Signal Common
ACM
-10V/20mA
-10V
Main circuit (power) terminals
Control terminals
Shielded leads & Cable

Figure 1 (For Frame G and above)

Support 12 pulse input

Power → Transformer → VFD-C2000 (690V)

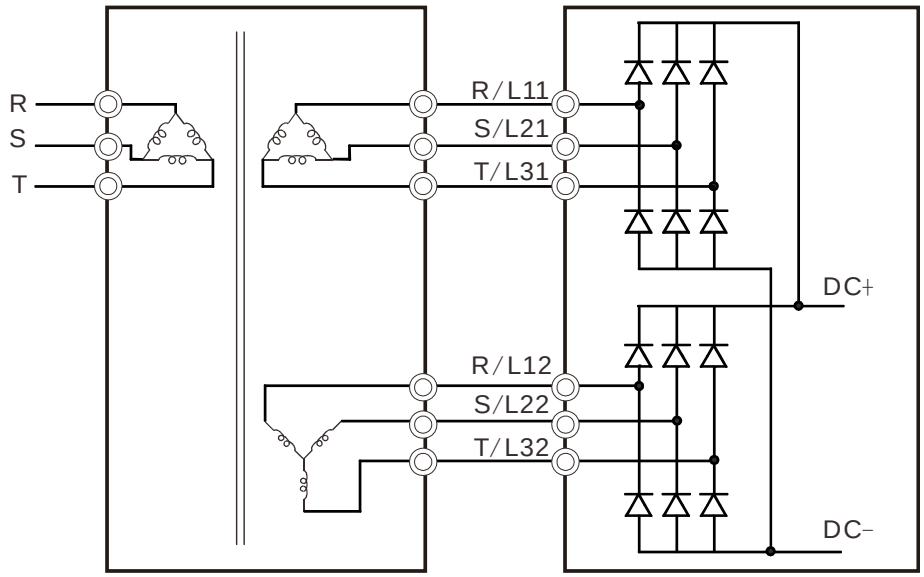

Note: 1. Before implementing 12 pulse input, please follow the wiring diagram as shown above, otherwise it may cause the fan to stop.

2. If you have any questions, please consult Delta for more detail.

Figure 2

SINK (NPN) / SOURCE (PNP) Mode

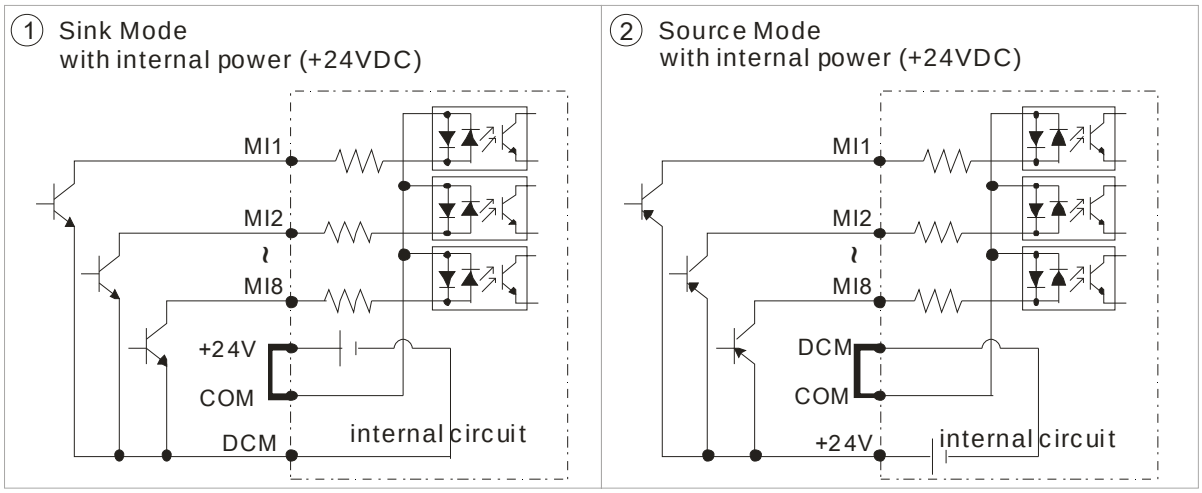

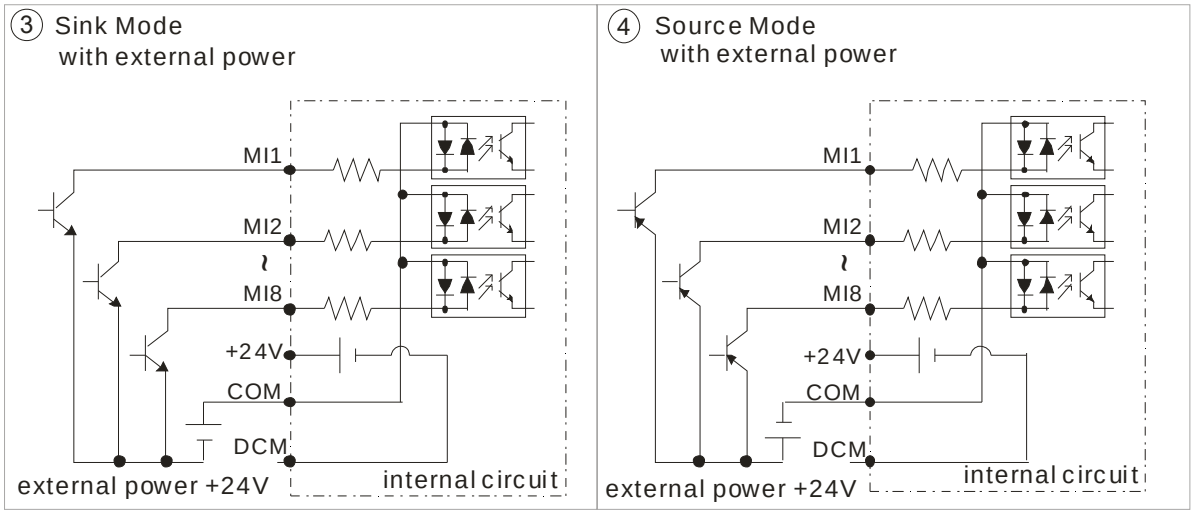

Figure 3

Function of DC Link

- Applicable to Frame E~H
- Operation Instruction

1. Common DC power and common DC bus link (refer to Figure 1)
   The terminal R and S (refer to Figure 3) are not required to remove when linking common DC power and common DC bus

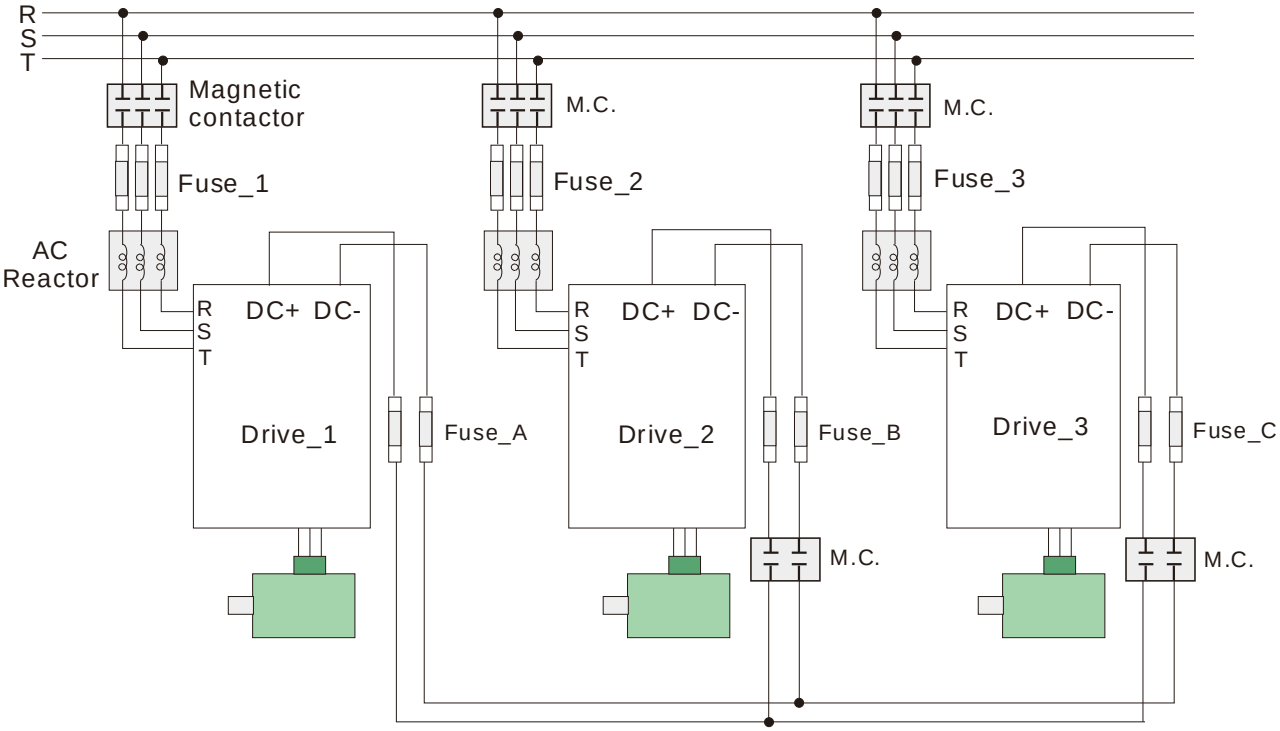

Figure 1

2. Common DC bus link (refer to Figure 2)

When RST power is off, please disconnect terminal r and terminal s. (As circled in Figure 3, disconnecting the gray section and properly store the cable of r and s. Cable r and s are not available in optional accessories, please reserve it carefully.)

After removing the cable of terminal r and terminal s, the power source can be connected to terminal r and terminal s. Please connect 220Vac for 220V model and 440 Vac for 440V model.

When the drive power is on, if terminal r and terminal s are not connected to the power source (220 Vac for 220V model and 440Vac for 440 V model), the digital keypad will display an error message “ryF”.

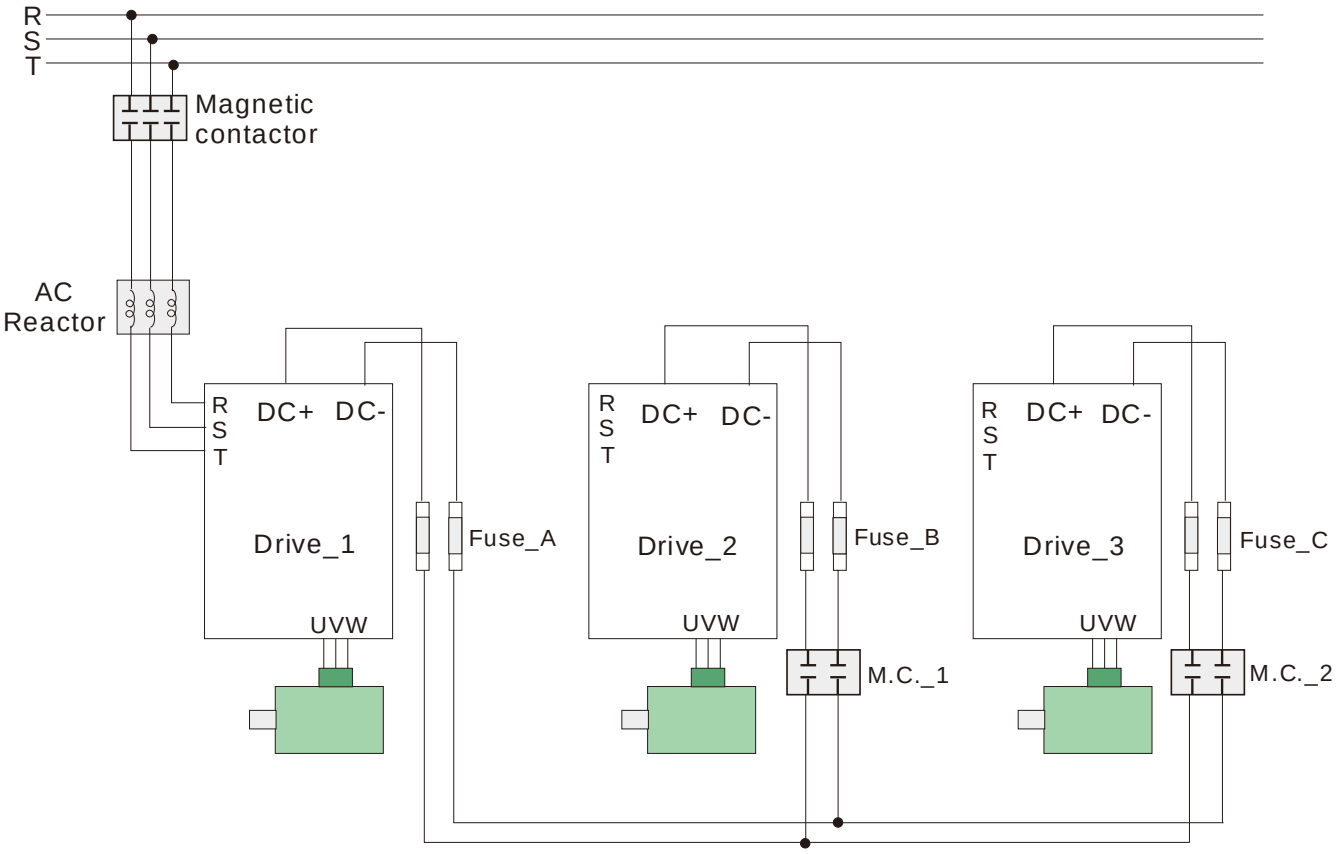

Figure 2

NOTE

Common DC Bus can only be applied to the drives with same power range. If in your case the drives are in different power range, please contact with us (Delta Industrial Automation Business Unit).

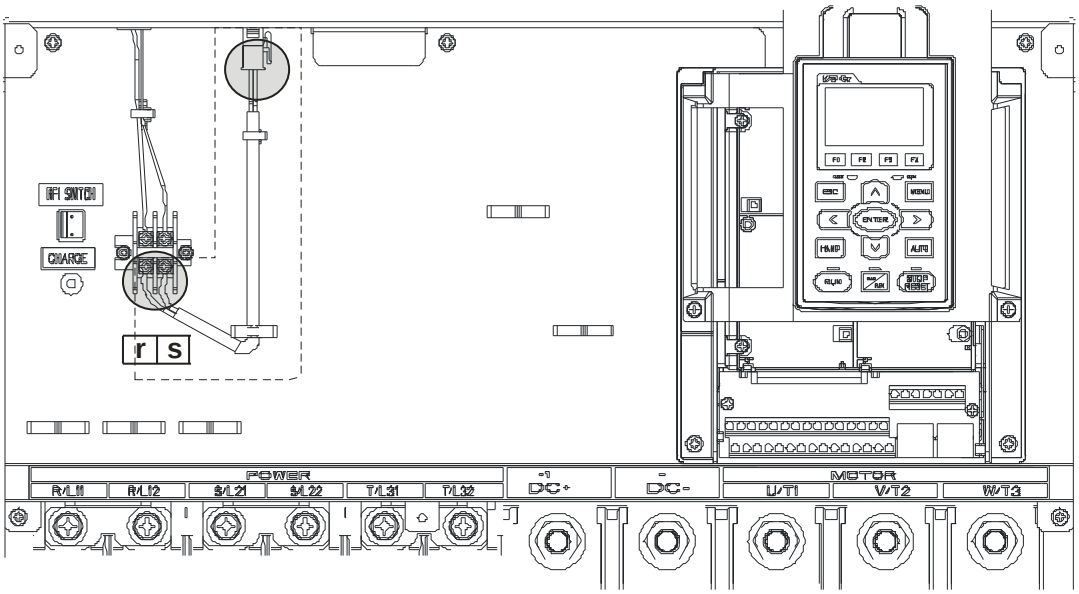

Figure 3

4-2 System Wiring Diagram

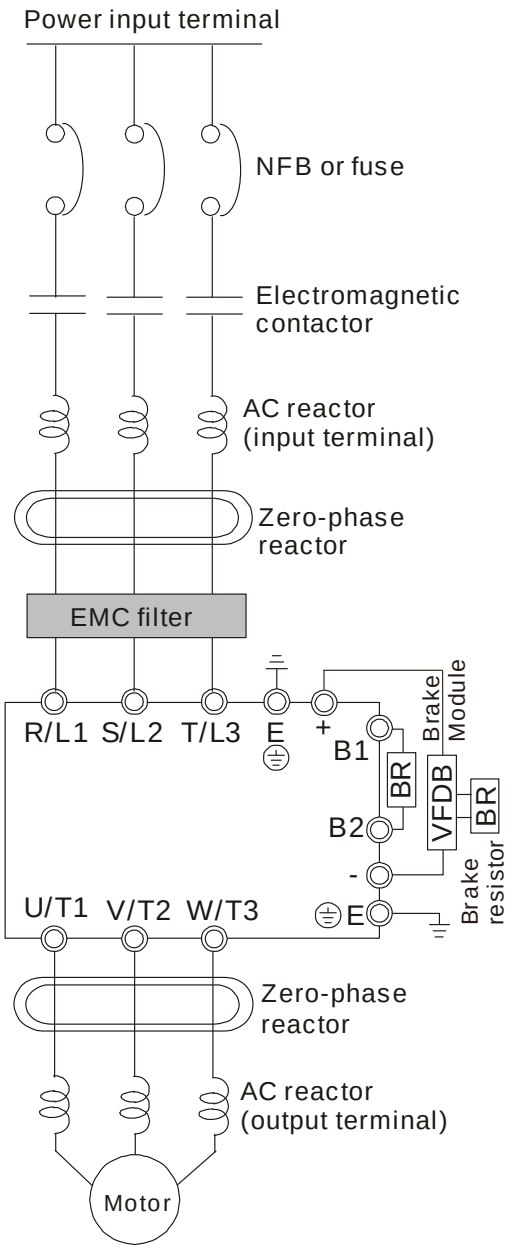

Power input terminal	Please supply power according to the rated power specifications indicated in the manual (refer to 9 Specifications Table).
NFB or fuse	There may be a large inrush current during power on. Refer to 7-2 NFB to select a suitable NFB or 7-3 Fuse Specification Chart.
Electromagnetic contactor	Switching ON/OFF the primary side of the electromagnetic contactor can turn the integrated elevator device ON/OFF, but frequent switching is a cause of machine failure. Do not switch ON/OFF more than once an hour. Do not use the electromagnetic contactor as the power switch for the integrated elevator d rive; doing so will shorten the life of the integrated elevator d rive.
AC reactor (input terminal)	When the main power supply capacity is greater than 500kVA, or when it switches into the phase capacitor, the instantaneous peak voltage and current generated will destroy the internal circuit of the motor drive. It is recommended to install an input side AC reactor in the motor drive. This will also improve the power factor and reduce power harmonics. The wiring distance should be within 10m. Please refer to 7-4.
Zero-phase reactor	Used to reduce radiated interference, especially in environments with audio devices, and reduce input and output side interference. The effective range is AM band to 10MHz. Please refer to Appendix 7-5.
EMC filter	Can be used to reduce electromagnetic interference. Please refer to 7-6.
Brake resistor	Used to shorten deceleration time of the motor. Please refer to 7-1.
AC reactor (output terminal)	The wiring length of the motor will affect the size of the reflected wave on the motor end. It is recommended to install an AC reactor when the motor wiring length is greater than 20 meters. Refer to 7-4.

[The page intentionally left blank]

Chapter 5 Main Circuit Terminals

5-1 Main Circuit Diagram

5-2 Main Circuit Terminals

DANGER

- ☑ Be sure to tighten the screws of the main circuit terminals to prevent sparks due to the loosening of vibrations.
- ☑ Ensure the insulation between the main circuit wiring, and main circuit wiring with chassis in accordance with the relevant safety regulations.
- ☑ If it is necessary to add filter in motor drive output side, the inductive filter is required to be applied. It is not suggested to use phase-advancing capacitors or L-C, R-C filter.
- ☑ Do not short [+1, -], [+2, -], [+1/DC+, -/DC-] or connect braking resistors directly, or the motor drive will be damaged.

CAUTION

Main power terminals

- ☑ Do not connect 3-phase model to one-phase power. R/L1, S/L2 and T/L3 has no phase-sequence requirement, it can be used upon random selection.
- ☑ It is recommend adding a magnetic contactor (MC) to the power input wiring to cut off power quickly and reduce malfunction when activating the protection function of the AC motor drive. Both ends of the MC should have an R-C surge absorber.
- ☑ Before implementing 12 pulse input, please follow the main circuit diagram (Frame G and above), otherwise it may cause the fan to stop. If you have any questions, please consult Delta for more detail.
- ☑ Please use voltage and current within the specification.
- ☑ When using a general GFCI (Ground Fault Circuit Interrupter), select a current sensor with sensitivity of 200 mA or above and not less than 0.1-second operation time to avoid nuisance tripping.
- ☑ Please use the shield wire or tube for the power wiring and ground the two ends of the shield wire or tube.
- ☑ Do NOT run/stop AC motor drives by turning the power ON/OFF. Run/stop AC motor drives by RUN/STOP command via control terminals or keypad. If you still need to run/stop AC motor drives by turning power ON/OFF, it is recommended to do so only ONCE per hour.

Output terminals for main circuit

- ☑ Use well-insulated motor, suitable for inverter operation.
- ☑ Note down the rated data and the torque force of the wiring when the output terminal is below 75°C. This information provides the right wiring method to wire terminals (It corresponds to the terminals of the motor wire and non-motor wire).
- ☑ When the AC drive output terminals U/T1, V/T2, and W/T3 are connected to the motor terminals U/T1, V/T2, and W/T3, respectively, the motor will rotate counterclockwise (as viewed on the shaft end of the motor) when a forward operation command is received. To permanently reverse the direction of motor rotation, switch over any of the two motor leads

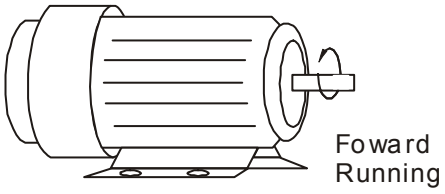

Terminals for connecting DC reactor, external brake resistor, external brake resistor and DC circuit

☑ This is the terminals used to connect the DC reactor to improve the power factor. For the factory setting, it connects the short-circuit object. Please remove this short-circuit object before connecting to the DC reactor.

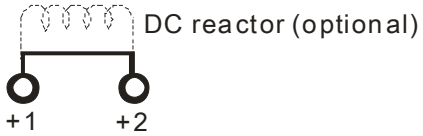

☑ Connect a brake resistor or brake unit in applications with frequent deceleration ramps, short deceleration time, too low brake torque or requiring increased brake torque.

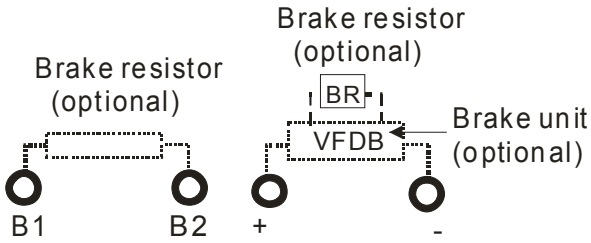

☑ The external brake resistor of Frame A, B and C should connect to the terminals (B1, B2) of AC motor drives.

☑ For those models without built-in brake resistor, please connect external brake unit and brake resistor (both of them are optional) to increase brake torque.

☑ When the terminals +1, +2 and - are not used, please leave the terminals open.

☑ DC+ and DC- are connected by common DC bus, please refer to Chapter 5-1 (Main Circuit Terminal) for the wiring terminal specification and the wire gauge information.

☑ Please refer to the VFDB manual for more information on wire gauge when installing the brake unit.

5-1 Main Circuit Diagram

For frame A~C

* Provide 3-phase input power

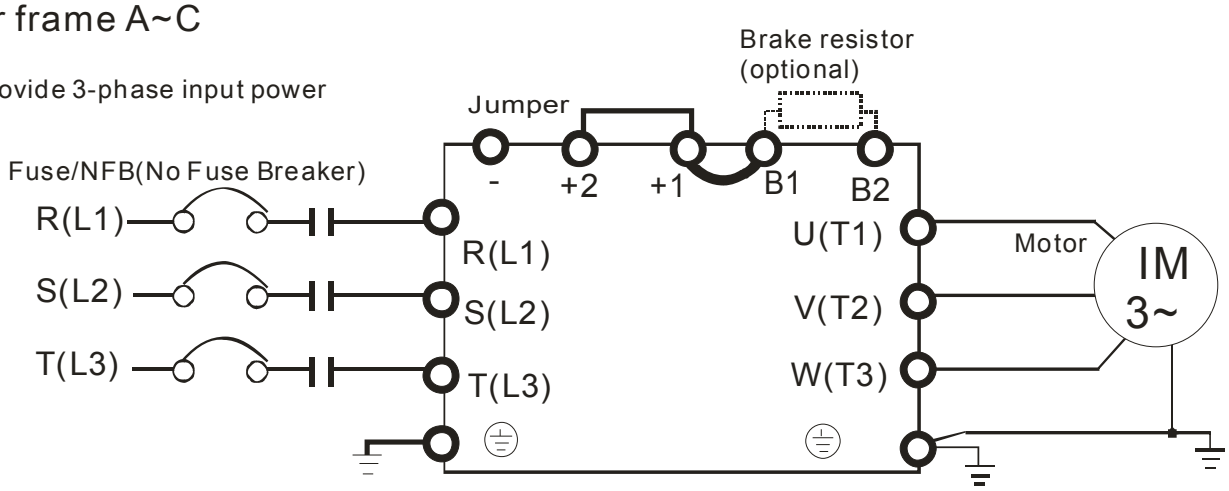

For frame A~C

* Provide 3-phase input power

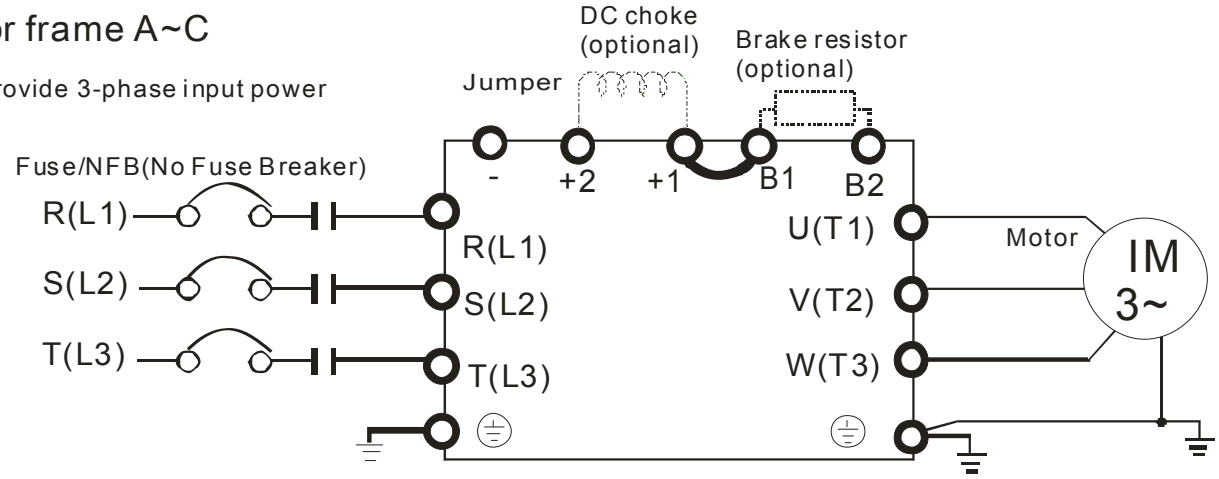

For frame D0 and above D0

* Provide 3-phase input power

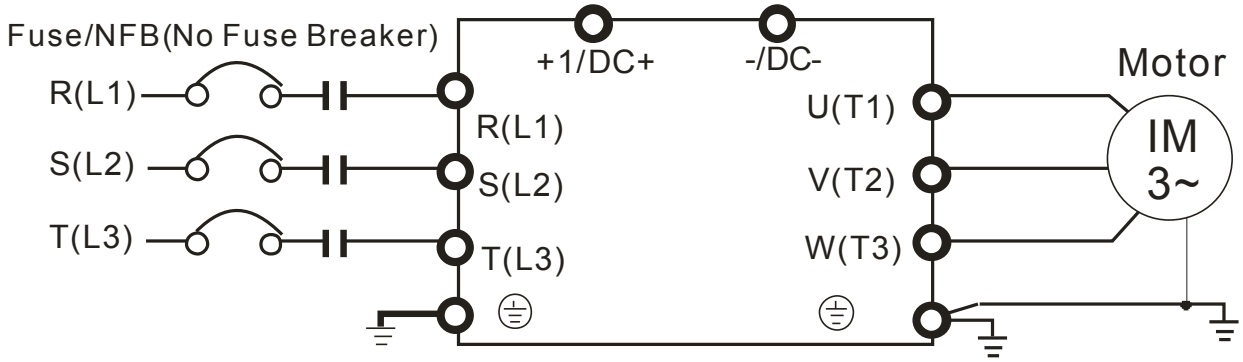

For Frame G and above

Support 12 pulse input

Power → Transformer → VFD-C2000 (690V)

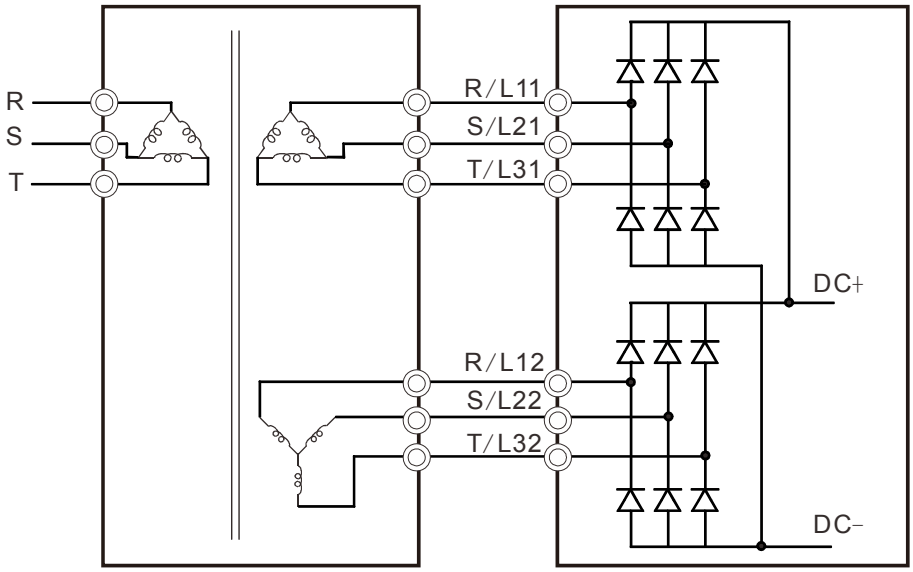

NOTE

- If the wiring between motor drive and motor is over 75 meters, please refer to Chapter 7-4 Specifications of limits for motor cable length.
- Please remove short circuit plate of FRAME G and H if 12 pulse is implemented.

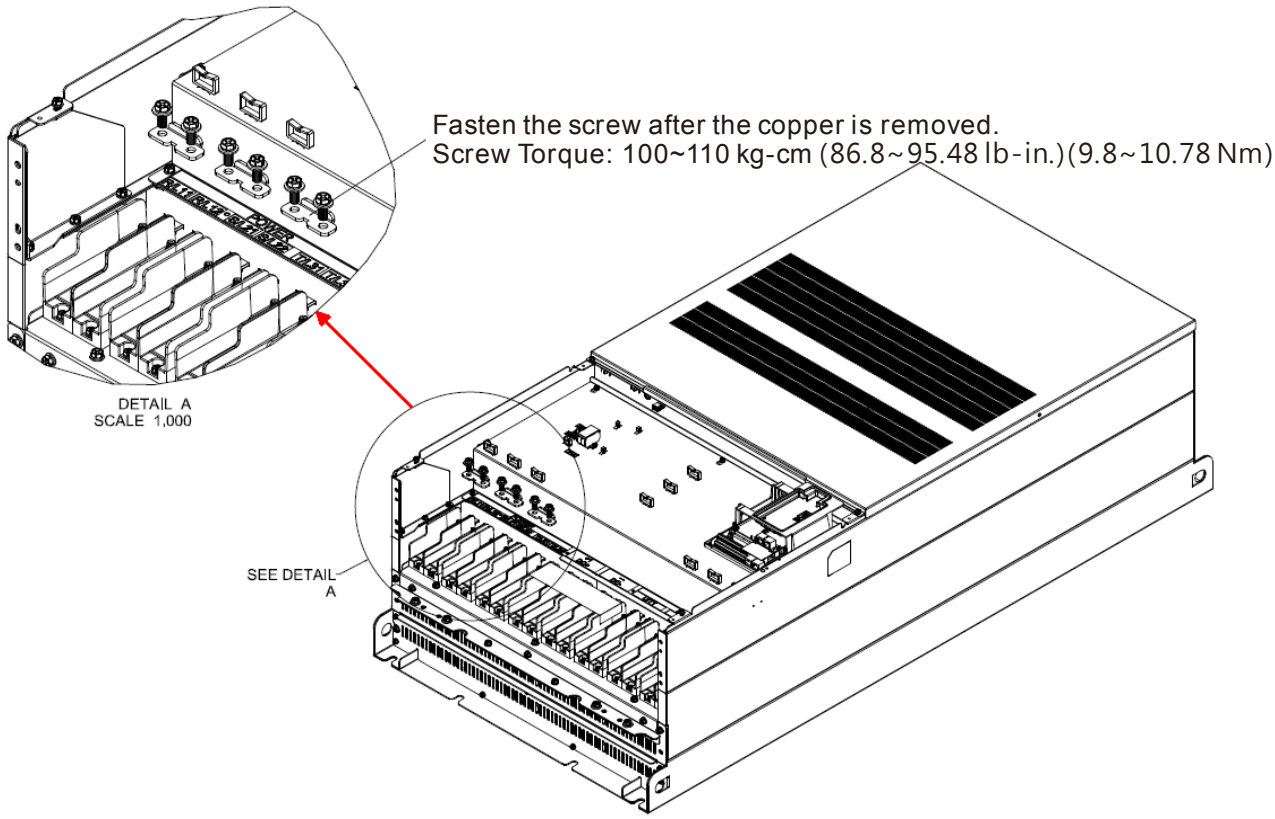

- Before implementing the 12 pulse, consult Delta for more detail.

Terminals	Descriptions
R/L1, S/L2, T/L3	AC line input terminals 3-phase
U/T1, V/T2, W/T3	AC drive output terminals for connecting 3-phase induction motor
+1, +2	Applicable to frame A~C Connections for DC reactor to improve the power factor. It needs to remove the jumper for installation.
+1/DC+, -/DC-	Connections for brake unit (VFDB series) (for 690V models: ≤ 37 kW, built-in brake unit) Common DC Bus
B1, B2	Connections for brake resistor (optional)
⏚	Earth connection, please comply with local regulations.

5-2 Main Circuit Terminals

Frame A

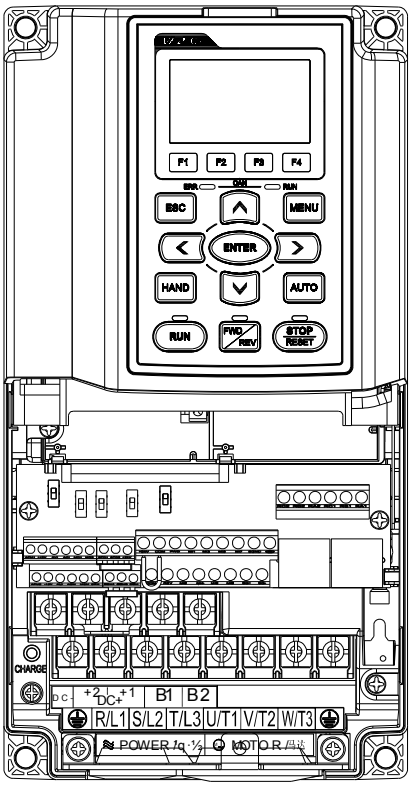

Main Circuit Terminals:
R/L1,S/L2,T/L3,U/T1, V/T2, W/T3, ⏚, B1, B2, +1, +2, -

Models	Max. Wire Gauge	Min. Wire Gauge	Torque (±10%)
VFD015C53A-21	8 AWG (8.4 mm^2)	14 AWG (2.1 mm^2)	M4 20 kg-cm (17.4 lb-in.) (1.96 Nm)
VFD022C53A-21			
VFD037C53A-21			
UL installations must use 1 KVac, 75°C or 90°C wire. Use copper wire only.			

NOTE

1. Recommended to use Ring Lug.
2. Refer to chart 1 for the spec of terminal.
3. Refer to chart 2 for the spec of insulated tube (resistance 1 KVac).

Figure 1	Figure 2
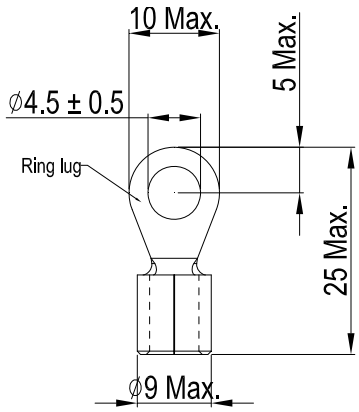	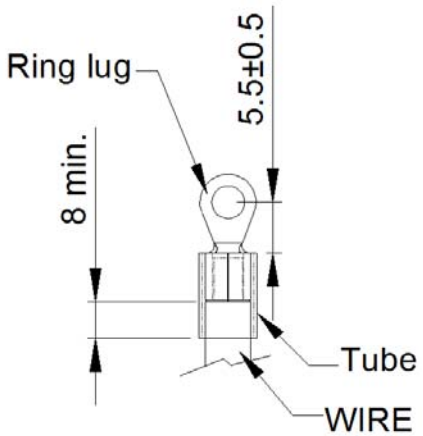

Unit: mm

Frame B

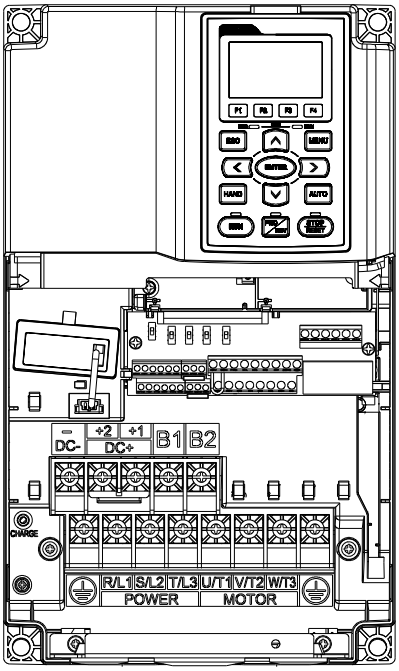

Main Circuit Terminals:
R/L1, S/L2, T/L3, U/T1, V/T2, W/T3, ⏚, B1, B2, +1, +2, -

Models	Max. Wire Gauge	Min. Wire Gauge	Torque (±10%)
VFD055C53A-21	4 AWG (21.2 mm^2)	10 AWG (5.3 mm^2)	M5 35 kg-cm (30.4 lb-in.) (3.434 Nm)
VFD075C53A-21			
VFD110C53A-21		8 AWG (8.4 mm^2)	
VFD150C53A-21			

UL installations must use 1 KVac, 75°C or 90°C wire.
Use copper wire only.

NOTE

1. Enhancing screwing of DC+ [+2 & +1] terminals with torque 45 kg-cm [39.0 lb-in.] (4.415 Nm) (±10%)
2. Recommended to use Ring Lug.
3. Refer to chart 1 for the spec of terminal.
4. Refer to chart 2 for the spec of insulated tube (resistance 1 KVac).

Figure 1

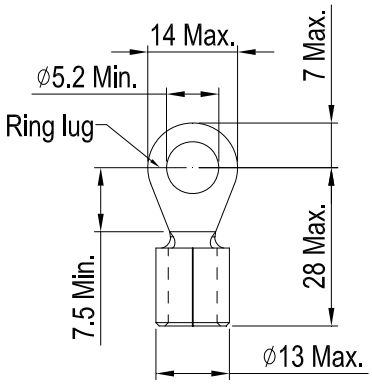

Figure 2

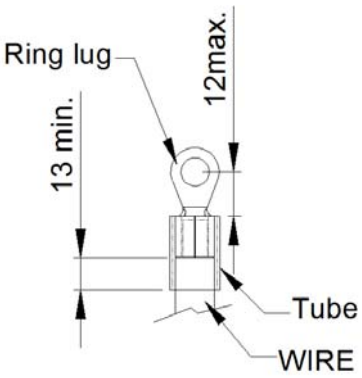

Unit: mm

Frame C

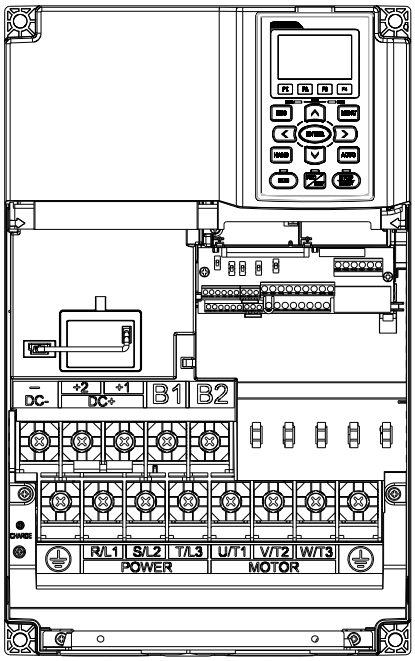

Main Circuit Terminals:
R/L1, S/L2, T/L3, U/T1, V/T2, W/T3, ⏚, B1, B2, +1, +2, -

Models	Max. Wire Gauge	Min. Wire Gauge	Torque (±10%)
VFD185C63B-21	1/0 AWG (53.5 mm^2)	8 AWG (8.37 mm^2)	M8 80 kg-cm (69.4 lb-in.) (7.85 Nm)
VFD220C63B-21		6 AWG (13.30 mm^2)	
VFD300C63B-21		4 AWG (21.15 mm^2)	
VFD370C63B-21		3 AWG (26.67 mm^2)	

UL installations must use 1 KVac, 75°C or 90°C wire.
Use copper wire only.

NOTE

1. Enhancing screwing of DC+ [+2 & +1] terminals with torque 90 kg-cm [78.2 lb-in.] (8.83 Nm) (±10%)
2. Recommended to use Ring Lug.
3. Refer to chart 1 for the spec of terminal.
4. Refer to chart 2 for the spec of insulated tube (resistance 1 KVac).

Figure 1

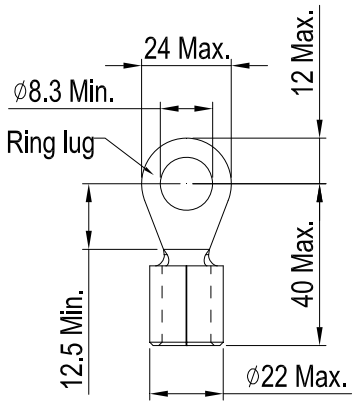

Figure 2

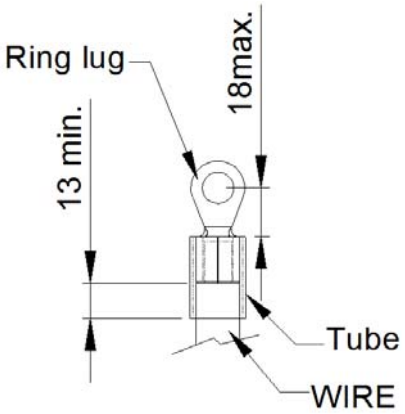

Unit: mm

Frame D

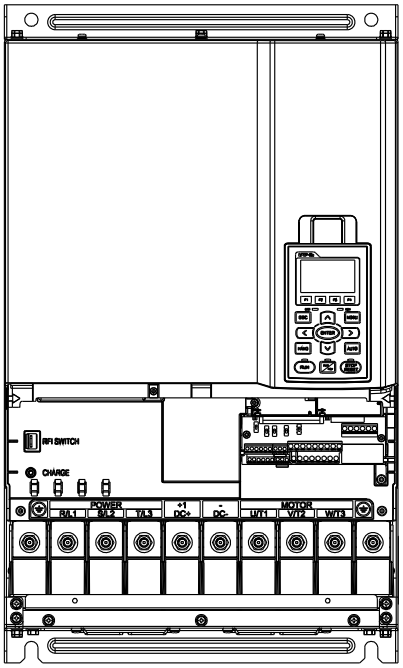

Main Circuit Terminals:
R/L1, S/L2, T/L3, U/T1, V/T2, W/T3, ⏚, +1/DC+, -/DC-

Models	Max. Wire Gauge	Min. Wire Gauge	Torque (±10%)
VFD450C63B-00	4/0 AWG. (107 mm^2)	3 AWG (26.67 mm^2)	M8 200 kg-cm (173 lb-in.) (19.62 Nm)
VFD550C63B-00		2 AWG (33.60 mm^2)	
VFD450C63B-21		3 AWG (26.67 mm^2)	
VFD550C63B-21		2 AWG (33.60 mm^2)	

UL installations must use 1 KVac, 75°C or 90°C wire.
Use copper wire only.

NOTE

1. Recommended to use Ring Lug.
2. Refer to chart 1 for the spec of terminal.
3. Refer to chart 2 for the spec of insulated tube (resistance 1 KVac).

Figure 1

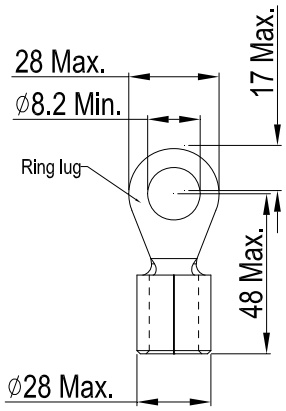

Figure 2

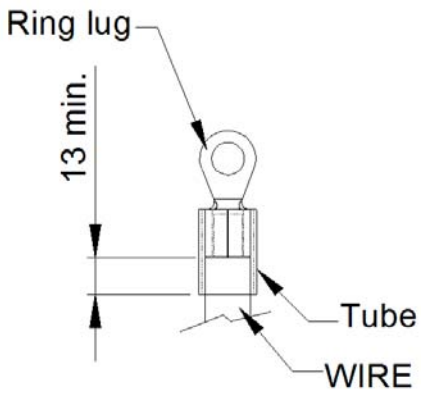

Unit: mm

Frame E

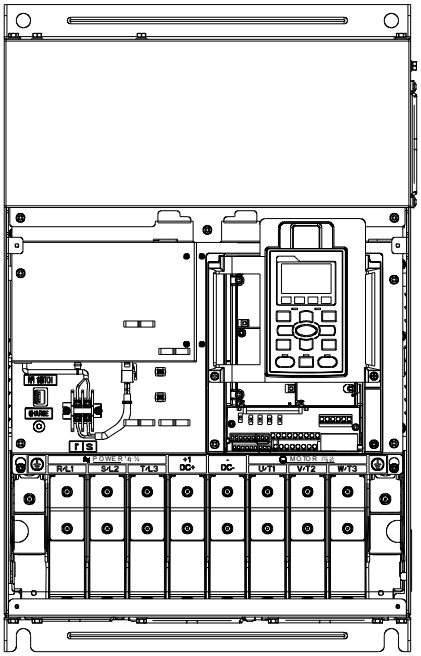

Main Circuit Terminals:

R/L1, S/L2, T/L3, U/T1, V/T2, W/T3, ⏚, +1/DC+, -/DC-

Models	Max. Wire Gauge	Min. Wire Gauge	Torque (±10%)
VFD750C63B-00	4/0 AWG*2 (107 mm2*2)	4 AWG*2 (21.15 mm^2*2)	M8 200 kg-cm (173 lb-in.) (19.62 Nm)
VFD900C63B-00		3 AWG*2 (26.67 mm^2*2)	
VFD1100C63B-00		2 AWG*2 (33.60 mm^2*2)	
VFD1320C63B-00		1 AWG*2 (42.41 mm^2*2)	
VFD750C63B-21		4 AWG*2 (21.15 mm^2*2)	
VFD900C63B-21		3 AWG*2 (26.67 mm^2*2)	
VFD1100C63B-21		2 AWG*2 (33.60 mm^2*2)	
VFD1320C63B-21		1 AWG*2 (42.41 mm^2*2)	

UL installations must use 1 KVac, 75°C or 90°C wire.
Use copper wire only.

NOTE

1. Recommended to use Ring Lug.
2. Refer to chart 1 for the spec of terminal.
3. Refer to chart 2 for the spec of insulated tube (resistance 1 KVac).

Figure 1

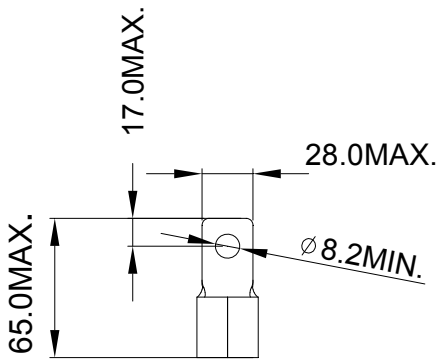

Figure 2

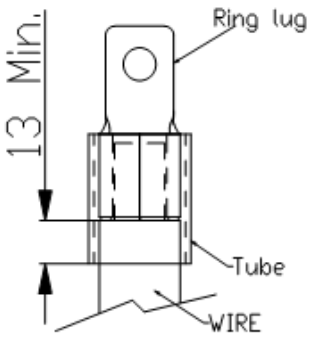

Unit: mm

Frame F

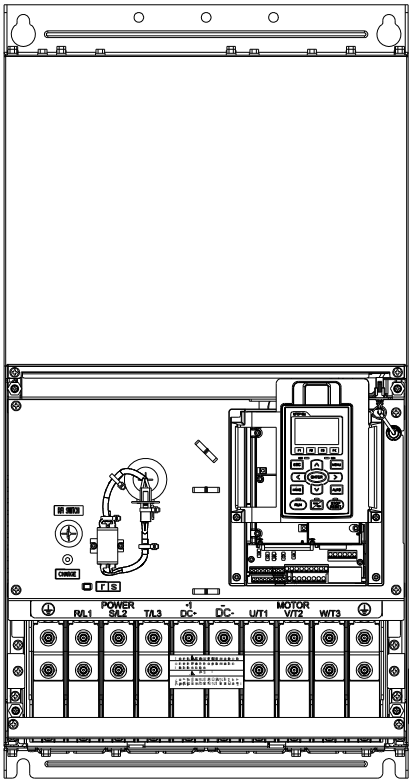

Main Circuit Terminals:
R/L1, S/L2, T/L3, U/T1, V/T2, W/T3, +1/DC+, -/DC-

Models	Max. Wire Gauge	Min. Wire Gauge	Torque (±10%)
VFD1600C63B-00	4/0 AWG*2 (107 mm^2*2)	2/0 AWG*2 (67.43 mm2*2)	M8 200 kg-cm (173 lb-in.) (19.62 Nm)
VFD2000C63B-00		3/0 AWG*2 (84.95 mm^2*2)	
VFD1600C63B-21		2/0 AWG*2 (67.43 mm^2*2)	
VFD2000C63B-21		3/0 AWG*2 (84.95 mm^2*2)	

UL installations must use 1 KVac, 75°C or 90°C wire.
Use copper wire only.

NOTE

1. Recommended to use Ring Lug.
2. Refer to chart 1 for the spec of terminal.
3. Refer to chart 2 for the spec of insulated tube (resistance 1 KVac).

Figure 1

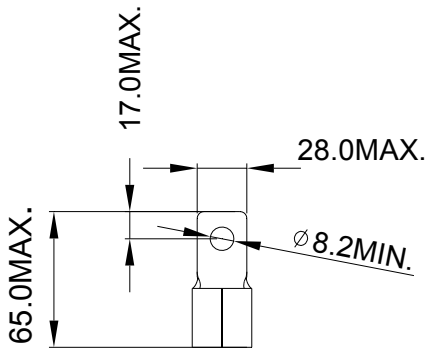

Figure 2

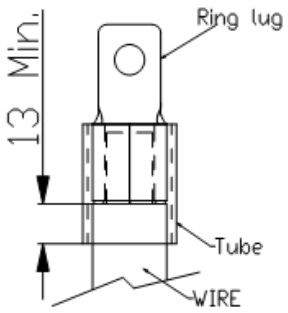

Unit: mm

Frame G

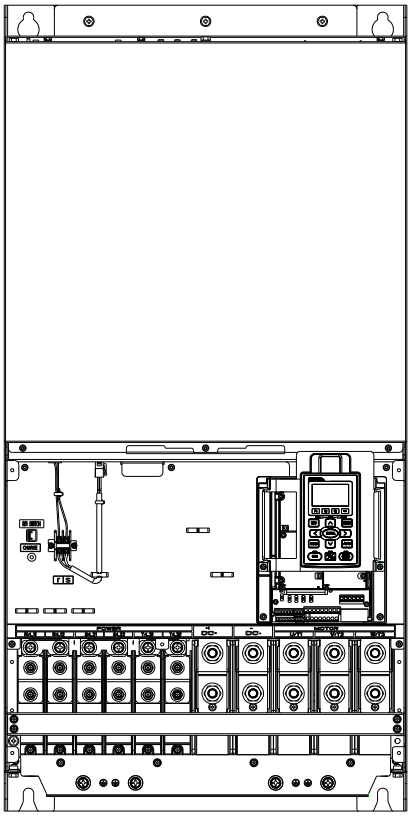

Main Circuit Terminals:
R/L11, R/L12, S/L21, S/L22, T/L31, T/L32

Models	Max. Wire Gauge	Min. Wire Gauge	Torque (±10%)
VFD2500C63B-00	300 MCM*4 (152 mm^2*4)	1 AWG*4 (42.40 mm^2*4)	M8 200 kg-cm (173 lb-in.) (19.62 Nm)
VFD3150C63B-00		1/0 AWG*4 (55.50 mm^2*4)	
VFD2500C63B-21		1 AWG*4 (42.40 mm^2*4)	
VFD3150C63B-21		1/0 AWG*4 (55.50 mm^2*4)	

Main Circuit Terminals：
U/T1, V/T2, W/T3, +1/DC+, -/DC-

Models	Max. Wire Gauge	Min. Wire Gauge	Torque (±10%)
VFD2500C63B-00	500 MCM*2 (253 mm^2*2)	250 MCM*2 (127 mm^2*2)	M12 408 kg-cm (354 lb-in.) (40 Nm)
VFD3150C63B-00		350 MCM*2 (177 mm^2*2)	
VFD2500C63B-21		250 MCM*2 (127 mm^2*2)	
VFD3150C63B-21		350 MCM*2 (177 mm^2*2)	

UL installations must use 1 KVac, 75°C or 90°C wire.
Use copper wire only.

NOTE

1. Recommended to use Ring Lug.
2. Refer to chart 1 &2 for the spec of terminal.
3. Refer to chart 3 & 4 for the spec of insulated tube (resistance 1 KVac).

Figure 1

R/L11, R/L12, S/L21, S/L22, T/L31, T/L32

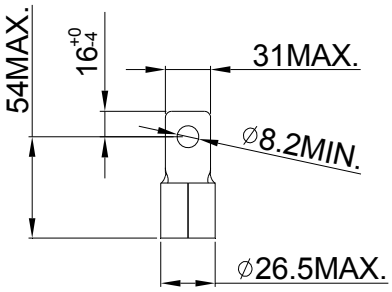

Figure 2

U/T1, V/T2, W/T3, +1/DC+, -/DC-

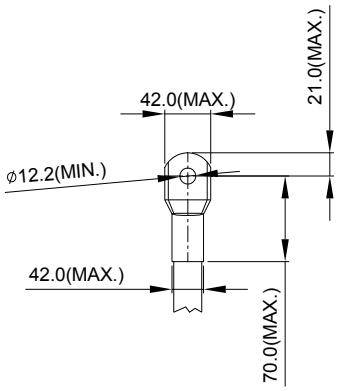

Figure 3

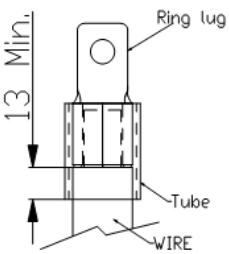

Figure 4

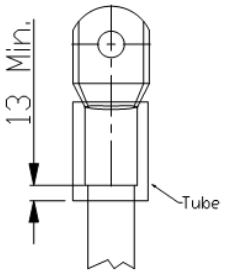

Unit: mm

Frame H

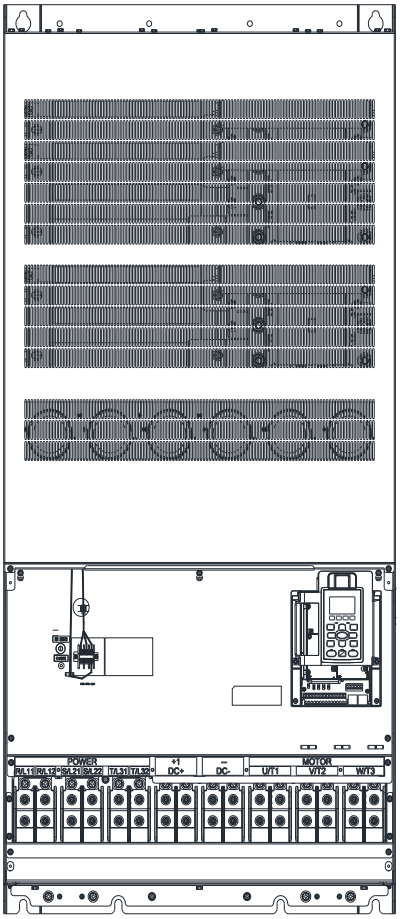

Main Circuit Terminals:

R/11, R12, S/21, S/22, T/31, T/32, U/T1, V/T2, W/T3, +1/DC+, -/DC-

Models	Max. Wire Gauge	Min. Wire Gauge	Torque (±10%)
VFD4000C63B-00	300 MCM*4 (152 mm^2*4)	3/0 MCM*4 (84.95 mm^2*4)	M8 200 kg-cm (173 lb-in.) (19.62 Nm)
VFD4500C63B-00		3/0 MCM*4 (84.95 mm^2*4)	
VFD5600C63B-00		250 MCM*4 (127 mm^2*4)	
VFD6300C63B-00		300 MCM*4 (152 mm^2*4)	
VFD4000C63B-21		3/0 MCM*4 (84.95 mm^2*4)	
VFD4500C63B-21		3/0 MCM*4 (84.95 mm^2*4)	
VFD5600C63B-21		250 MCM*4 (127 mm^2*4)	
VFD6300C63B-21		300 MCM*4 (152 mm^2*4)	

UL installations must use 1 KVac, 75°C or 90°C wire.
Use copper wire only.

NOTE

1. Recommended to use Ring Lug.
2. Refer to chart 1 for the spec of terminal.
3. Refer to chart 2 for the spec of insulated tube (resistance 1 KVac).

Figure 1	Figure 2
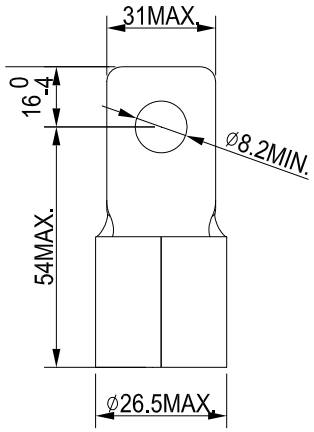	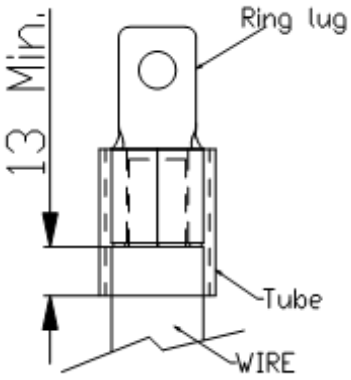

Unit: mm

Chapter 6 Control Terminals

6-1 Specifications of Control Terminal

6-2 Remove the Terminal Block

CAUTION

Analog input terminals (AVI、ACI、AUI、ACM)

☑ Analog input signals are easily affected by external noise. Use shielded wiring and keep it as short as possible (<20 m) with proper grounding. If the noise is inductive, connecting the shield to terminal ACM can have better result.

☑ When using analog input signal in the circuit, twisted pair is suggested to use for dealing with weak signal

☑ If the analog input signals are affected to malfunction by noise from the AC motor drive, please connect a capacitor and ferrite core as indicated in the following diagram.

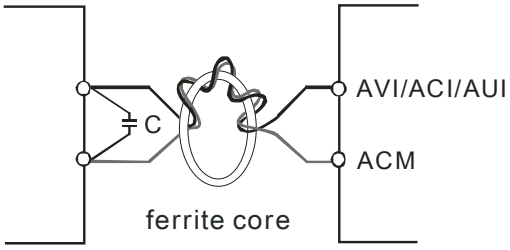

Wind each wires 3 times or more around the core

Digital inputs (FWD、REV、MI1~MI8、COM)

☑ The "COM" terminal is the common side of the photo-coupler. Any of wiring method, the "common point" of all photo-coupler must be the "COM".

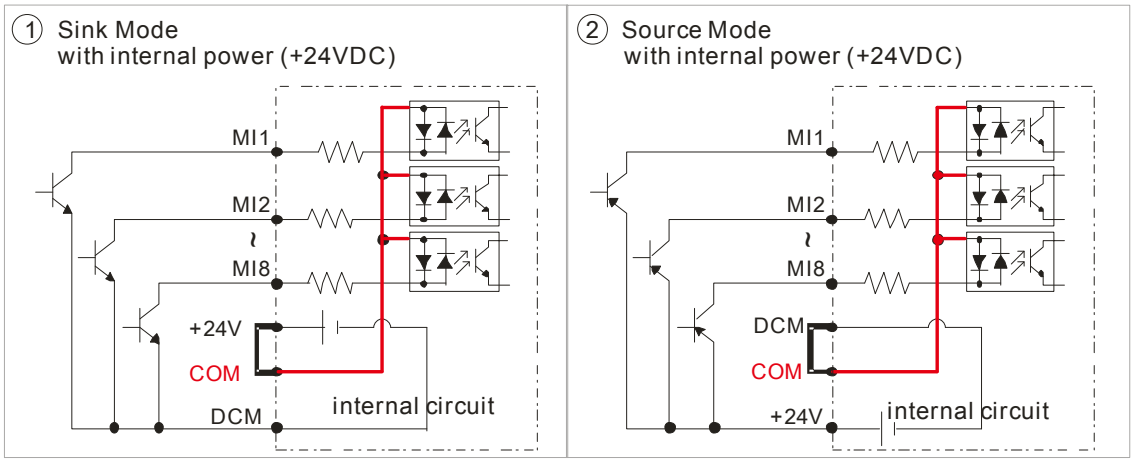

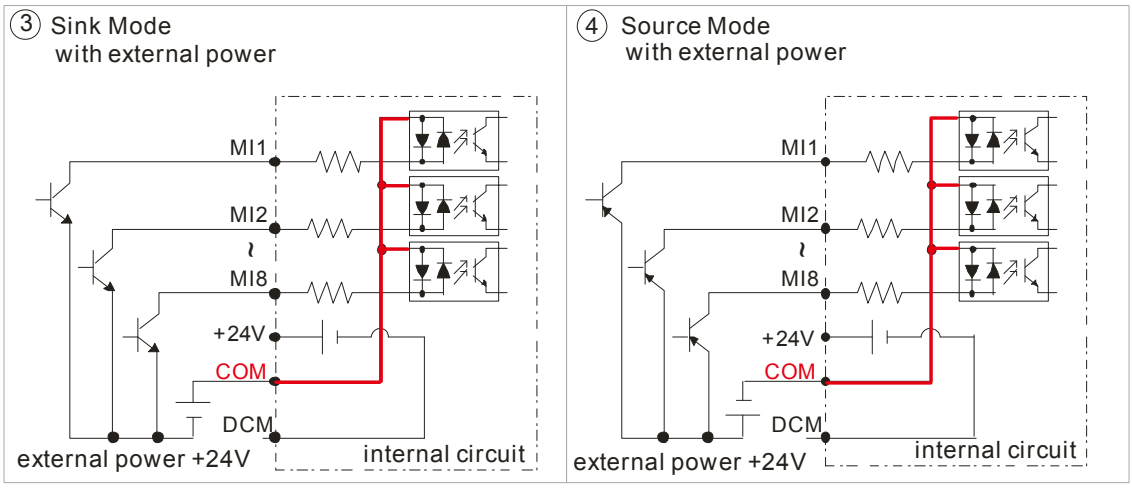

	☑ When the photo-coupler is using internal power supply, the switch connection for Sink and Source as below: MI-DCM: Sink mode MI-+24V: Source mode ☑ When the photo-coupler is using external power supply, please remove the short circuit cable between the +24V and COM terminals. The connection mode is Sink mode or Source mode is according to the below: The “+” of 24V connecting to “COM: Sink mode The “-“ of 24V connecting to COM: Source mode **Transistor outputs (MO1、MO2、MCM)** ☑ Make sure to connect the digital outputs to the right polarity. ☑ When connecting a relay to the digital outputs connect a surge absorber across the coil and check the polarity.

Please remove the top cover before wiring the multi-function input and output terminals,

The drive appearances shown in the figures are for reference only, a real drive may look different.

Remove the cover for wiring. Frame A ~ H

Frame A & B
Loosen the screws and press the tabs on both sides to remove the cover. Screw torque: 12~15 Kg-cm [10.4~13 lb-in.] [1.18~1.47 Nm]

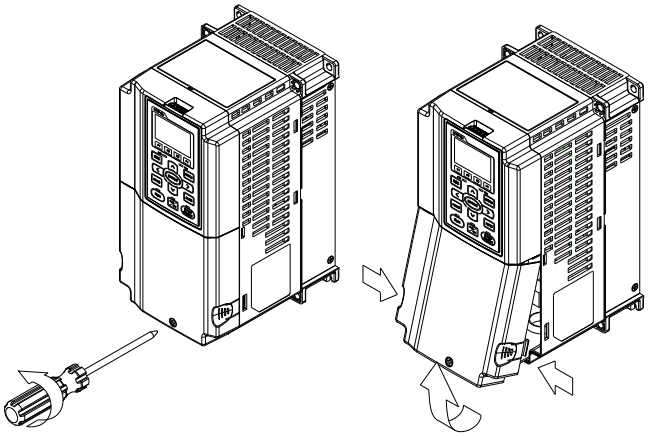

Frame C
Screw torque: 12~15 Kg-cm [10.4~13 lb-in.] [1.18~1.47 Nm] Loosen the screws and press the tabs on both sides to remove the cover.

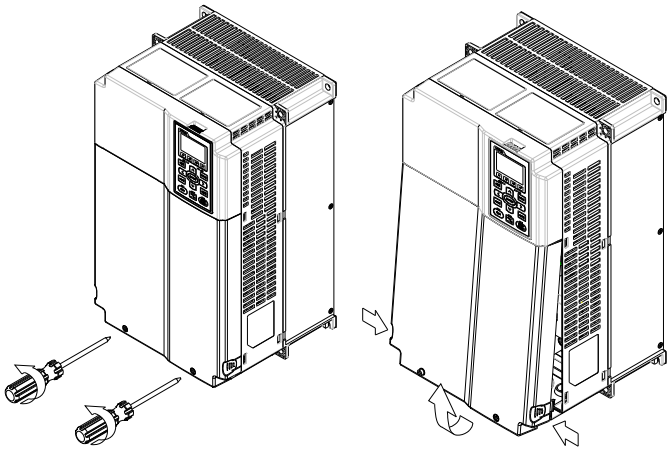

Frame D
Screw torque: 12~15 Kg-cm [10.4~13 lb-in.] [1.18~1.47 Nm]
To remove the cover, lift it slightly and pull outward. Loosen the screws and press the tabs on both sides to remove the cover.

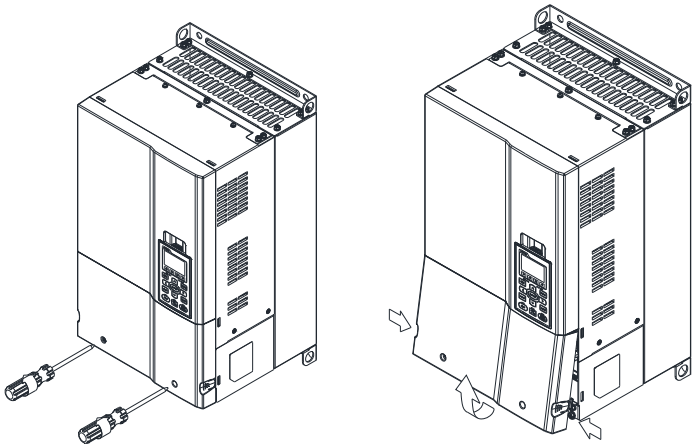

Frame E
Screw torque: 12~15 Kg-cm [10.4~13 lb-in.] [1.18~1.47 Nm]
To remove the cover, lift it slightly and pull outward.

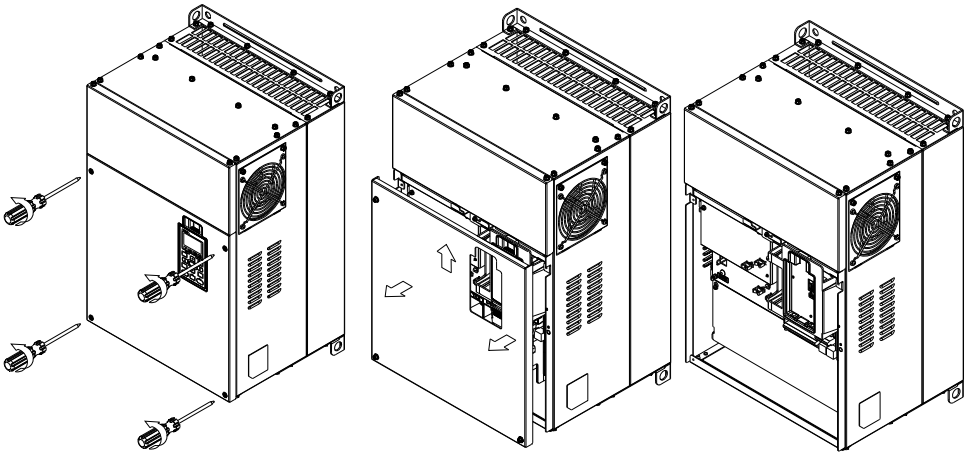

Frame F
Screw torque: 12~15 Kg-cm [10.4~13 lb-in.] [1.18~1.47 Nm]
To remove the cover, lift it slightly and pull outward

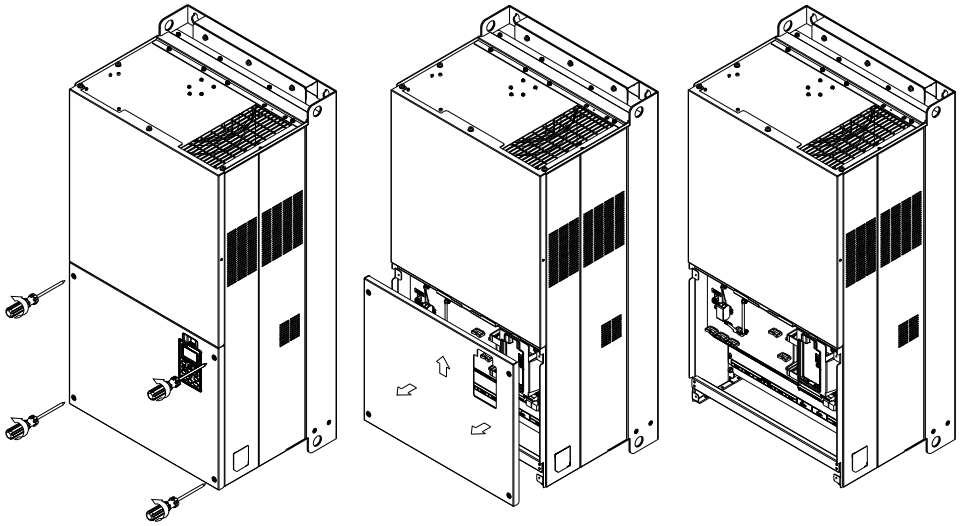

Frame G
Screw torque: 12~15 Kg-cm [10.4~13 lb-in.] [1.18~1.47 Nm]
To remove the cover, lift it slightly and pull outward

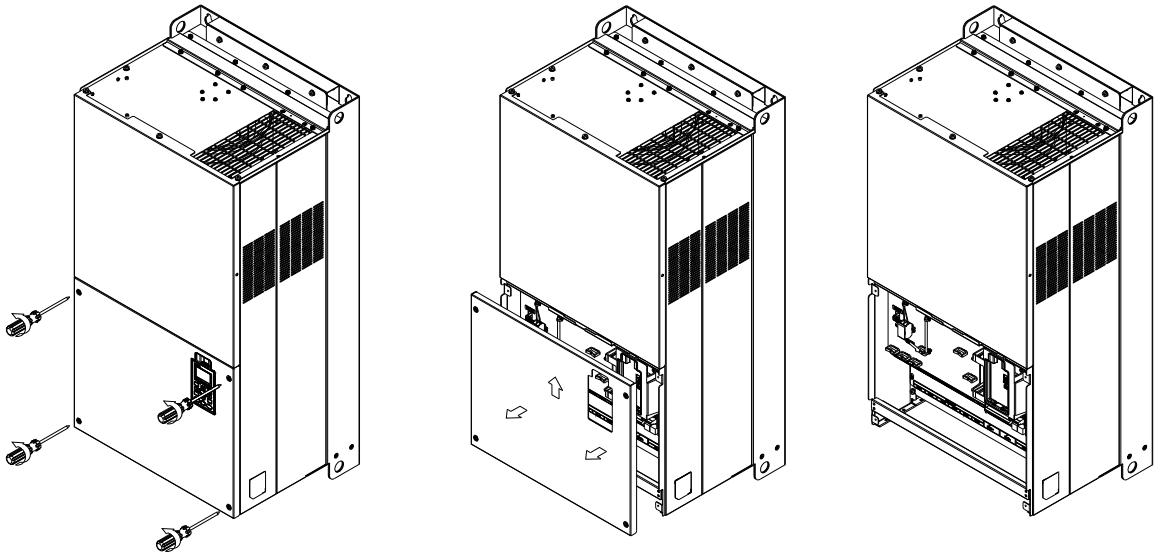

Frame H
Screw torque: 14~16 Kg-cm [12.15~13.89 lb-in.] [1.37~1.57 Nm]
To remove the cover, lift it slightly and pull outward

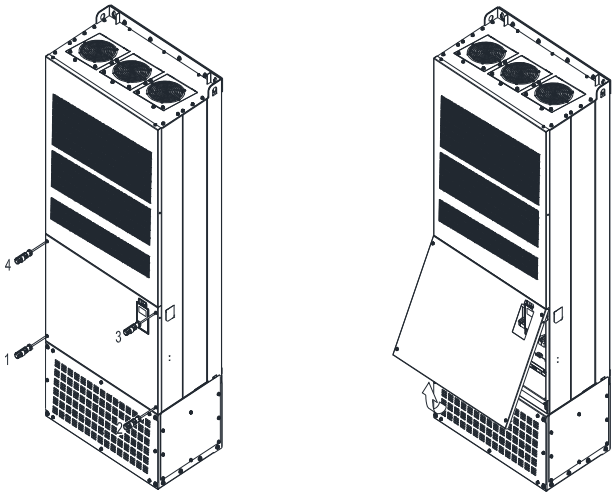

6-1 Specifications of Control Terminal

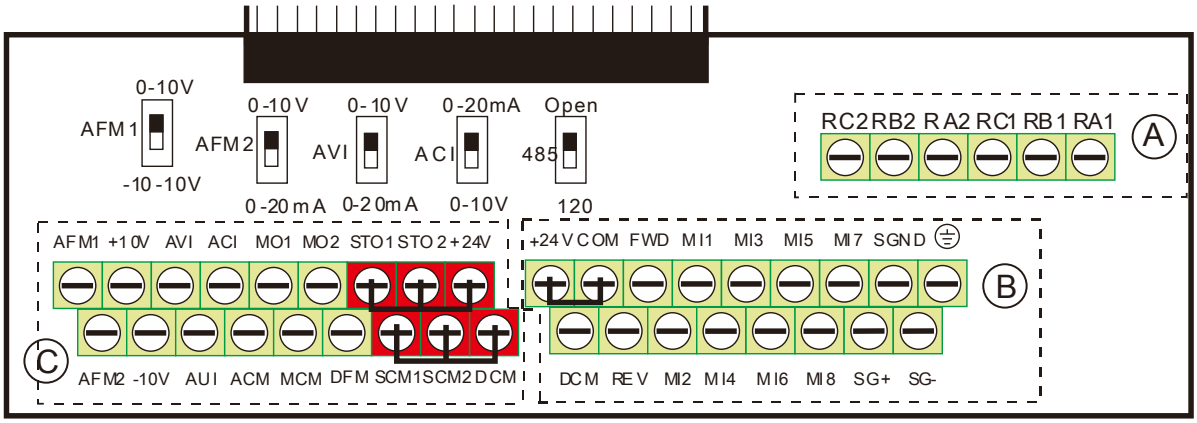

Removable Terminal Block

Wire Gauge: Ⓐ Ⓑ 26~16 AWG [0.1281-1.318 mm^2]; Ⓒ 30~14 AWG

Torque: Ⓐ 5 kg-cm [4.3 lb-in.] [0.49 Nm] (As shown in figure above)

Ⓑ 8 kg-cm [6.94 lb-in.] [0.78 Nm] (As shown in figure above)

Ⓒ 2 kg-cm [1.73 lb-in.] [0.19 Nm] (As shown in figure above)

Wiring precautions:

- Install signal wires properly and trimly in the terminals and tightened the terminals by flathead screwdriver. Reserve at least 5 mm bare part for the signal wires to prevent the poor connection or wire loss.
- Flathead screwdriver: blade width 3.5 mm, tip thickness 0.6 mm
- In the figure above, the factory setting for STO1, STO2, +24V and SCM1, SCM2, DCM is short circuit. The factory setting for +24V-COM is short circuit and SINK mode (NPN); please refer to Chapter 4 Wiring for more detail.

Terminals	Terminal Function	Factory Setting (NPN mode)
+24V	Digital control signal common (Source)	+24V ± 5% 200 mA
COM	Digital control signal common (Sink)	Common for multi-function input terminals
FWD	Forward-Stop command	FWD-DCM: ON➔ forward running OFF➔ deceleration to stop
REV	Reverse-Stop command	REV-DCM: ON➔ reverse running OFF➔ deceleration to stop
MI 1 ~ MI 8	Multi-function input 1~8	Refer to parameters 02-01~02-08 to program the multi-function inputs MI 1~MI 8. Source mode: ON: the activation current is 3.3 mA ≥ 11 VDC OFF: cut-off voltage ≤ 5 VDC Sink Mode: ON: the activation current is 3.3 mA ≤ 13 VDC OFF: cut-off voltage ≥ 19 VDC
DFM	Digital frequency meter 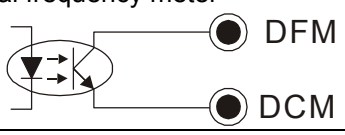 	Regard the pulse voltage as the output monitor signal Max. current: 30 mA Max. voltage: 30 VDC Duty-cycle: 50% ± 1% (In 30 VDC/30 mA/RL=100 pf) Max. output frequency: 100 kHz Limiting resistor R: ≥ 1 kohm Output load resistance RL: Inductive load ≤ 100 pf Resistive load ≥ 1 kohm, the resistance limits output voltage Voltage of DFM-DCM = External Voltage * (RL/(RL+R))
DCM	Digital frequency signal common	

Terminals	Terminal Function	Factory Setting (NPN mode)
MO1	Multi-function Output 1 (photocoupler)	The AC motor drive releases various monitor signals, such as drive in operation, frequency attained and overload indication, via transistor (open collector). 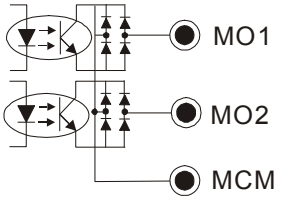
MO2	Multi-function Output 2 (photocoupler)	
MCM	Multi-function Output Common	Max 48 VDC 50 mA
RA1	Multi-function relay output 1 (N.O.) a	Resistive Load: 3 A (N.O.) / 3 A (N.C.) 250 VAC 5 A (N.O.) / 3 A (N.C.) 30 VDC Inductive Load (COS 0.4): 1.2 A (N.O.) / 1.2 A (N.C.) 250 VAC 2.0 A (N.O.) / 1.2 A (N.C.) 30 VDC It is used to output each monitor signal, such as drive is in operation, frequency attained or overload indication.
RB1	Multi-function relay output 1 (N.C.) b	
RC1	Multi-function relay common	
RA2	Multi-function relay output 2 (N.O.) a	
RB2	Multi-function relay output 2 (N.C.) b	
RC2	Multi-function relay common	
+10V	Potentiometer power supply	Analog frequency setting: +10 VDC 20 mA
-10V	Potentiometer power supply	Analog frequency setting: -10 VDC 20 mA
AVI	Analog voltage input 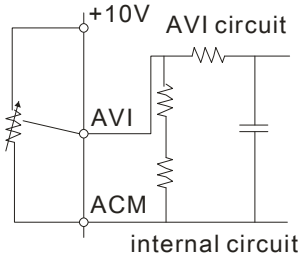	Impedance: 20 kΩ Range: 0~20 mA/4~20 mA/0~10 V =0~Max. Output Frequency (Pr.01-00) AVI switch, factory setting is 0~10 V
ACI	Analog current input 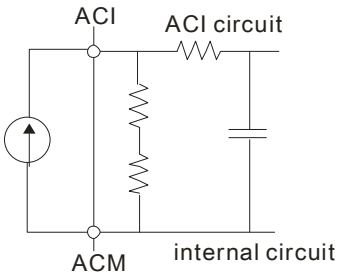	Impedance: 250 Ω Range: 0~20 mA/4~20 mA/0~10 V = 0 ~ Max. Output Frequency (Pr.01-00) ACI Switch, factory setting is 4~20 mA
AUI	Auxiliary analog voltage input 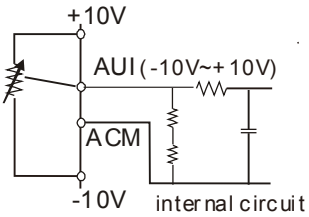	Impedance: 20 kΩ Range: -10~+10 VDC=0 ~ Max. Output Frequency(Pr.01-00)

Terminals	Terminal Function	Factory Setting (NPN mode)
AFM1	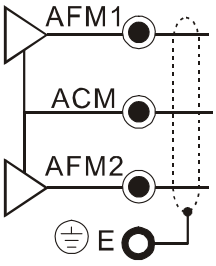	0~10 V Max. output current 2 mA, Max. load 5 kΩ -10~10 V maximum output current 2 mA, maximum load 5 kΩ Output current: 2 mA max Resolution: 0~10 V corresponds to Max. operation frequency Range: 0~10 V → -10~+10 V AFM 1 Switch, factory setting is 0~10 V
AFM2		0~10 V Max. output current 2 mA, Max. load 5 kΩ 0~20 mA Max. load 500 Ω Output current: 20 mA max Resolution: 0~10 V corresponds to Max. operation frequency Range: 0~10 V → 4~20 mA AFM 2 Switch, factory setting is 0~10 V
ACM	Analog Signal Common	Common for analog terminals
STO1	Default setting: S1/S2 and +24 are shorted	
SCM1	Rated voltage: 24 VDC±10%, Maximum voltage: 30 VDC	
STO2	Rated current: 6.67 mA±10%	
SCM2	STO activation mode: Input voltage level: 0 VDC < S1-DCM or S2-DCM < 5 VDC STO reaction time ≦ 20 mS (S1/S2 activation to drive stop current output STO inactivation mode: Input voltage level: 11 VDC < S1-DCM and S2-DCM < 30 VDC Power removal safety function for EN 954-1 and IEC/EN 61508 Note: Please refer to CH 17 Safety torque off function.	
SG+	Modbus RS-485 Note: Please refer to CH 12 Description of parameter settings. (Page 12-09-1 to 12-09-18)	
SG-		
SGND		
RJ-45	PIN 1,2,7,8 : Reserved PIN 3, 6: SGND PIN 4: SG- PIN 5: SG+	

NOTE: Wire size of analog control signals: 18 AWG (0.75 mm^2) with shielded wire

6-2 Remove the Terminal Block

1. Loosen the screws by screwdriver. (As shown in figure below).

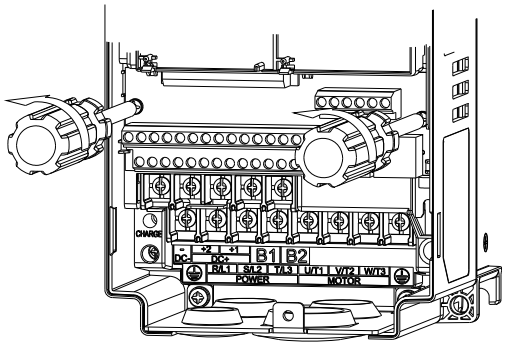

2. Remove the control board by pulling it out for a distance 6~8 cm (as 1 in the figure) then lift the control board upward (as 2 in the figure).

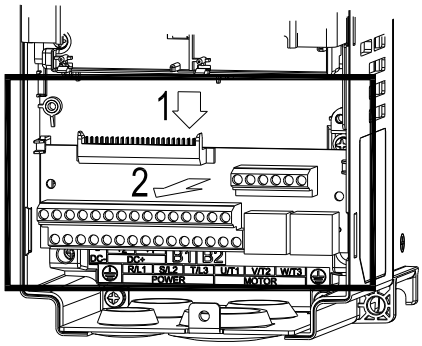

[The page intentionally left blank]

Chapter 7 Optional Accessories

7-1 All Brake Resistors and Brake Units Used in AC Motor Drives

7-2 Non-fuse Circuit Breaker

7-3 Fuse Specification Chart

7-4 AC/DC Reactor

7-5 Zero Phase Reactor

7-6 EMC Filter

7-7 Digital Keypad

7-8 Panel Mounting

7-9 Conduit Box Kit

7-10 Fan Kit

7-11 Flange Mounting Kit

7-12 USB/RS-485 Communication Interface IF6530

The optional accessories listed in this chapter are available upon request. Installing additional accessories to your drive would substantially improve the drive's performance. Please select an applicable accessory according to your need or contact the local distributor for suggestion.

7-1 All Brake Resistors and Brake Units Used in AC Motor Drives

600V

Applicable Motor (KW)			∗1 125% Braking Torque / 10%ED					∗2 Max. Brake Torque		
LD	ND	HD	Braking Torque [kg-m]	Brake Unit VFDB	∗3 Braking Resistor Series for each Brake Unit	Resistor Value Spec. for each AC Moto Drive	Total Braking Current [A]	Min. Resistor Value [Ω]	Max. Total Braking Current [A]	Peak Power [Kw]
1.5	0.75	0.75	0.5	-	BR080W750*1	80W 750Ω	1.2	280.0	4	4.5
2.2	1.5	1.5	1	-	BR200W360*1	200W 360Ω	2.6	186.7	6	6.7
3.7	2.2	2.2	1.5	-	BR300W400*1	300W 400Ω	2.3	160.0	7	7.8
5.5	3.7	3.7	2.5	-	BR500W100*1	500W 100Ω	9.2	93.3	12	13.4
7.5	5.5	3.7	3.7	-	BR750W140*1	750W 140Ω	6.6	80.0	14	15.7
11	7.5	7.5	5.1	-	BR1K0W075*1	1000W 75Ω	12.3	70.0	16	17.9
15	11	7.5	7.4	-	BR1K1W091*1	1100W 91Ω	10.1	62.2	18	20.2

690V

Applicable Motor (KW)			∗1 125% Braking Torque / 10%ED						∗2 Max. Brake Torque		
LD	ND	HD	Braking Torque [kg-m]	Brake Unit VFDB	∗3 Braking Resistor Series for each Brake Unit		Resistor Value Spec. for each AC Moto Drive	Total Braking Current [A]	Min. Resistor Value [Ω]	Max. Total Braking Current [A]	Peak Power [Kw]
18.5	15	11	10.2	-	BR1K0W039*2	2 series	2000W 78Ω	14.4	58.9	19	21.3
22	18.5	15	12.5	-	BR1K2W033*2	2 series	2400W 66Ω	17.0	58.9	19	21.3
30	22	18.5	14.9	-	BR1K5W027*2	2 series	3000W 54Ω	20.7	43.1	26	29.1
37	30	22	20.3	-	BR1K2W015*3	3 series	3600W 45Ω	24.9	43.1	26	29.1
45	37	30	25	6055*1	BR1K2W033*4	2 series, 2 parallel	4800W 33Ω	33.9	24.3	46	51.5
55	45	37	30.5	6055*1	BR1K5W027*4	2 series, 2 parallel	6000W 27Ω	41.5	24.3	46	51.5
75	55	45	37.2	6110*1	BR1K2W033*6	2 series, 3 parallel	7200W 22Ω	50.9	12.2	92	103.0
90	75	55	50.8	6110*1	BR1K5W027*6	2 series, 3 parallel	9000W 18Ω	62.2	12.2	92	103.0
110	90	75	60.9	6110*1	BR1K5W027*8	2 series, 4 parallel	12000W 13.5Ω	83.0	12.2	92	103.0
132	110	90	74.5	6160*1	BR1K2W015*12	3 series, 4 parallel	14400W 11.3Ω	99.6	8.2	136	152.3
160	132	110	89.4	6160*1	BR1K5W027*10	2 series, 5 parallel	15000W 10.8Ω	103.7	8.2	136	152.3
200	160	132	108.3	6200*1	BR1K5W027*12	2 series, 6 parallel	18000W 9.0Ω	124.4	6.9	162	181.4
250	200	160	135.4	6110*2	BR1K5W027*8	2 series, 4 parallel	24000W 6.8Ω	165.9	6.1	184	206.1
315	250	200	169.3	6160*2	BR1K5W027*10	2 series, 5 parallel	30000W 5.4Ω	207.4	4.1	272	304.6
400	315	250	213.3	6200*2	BR1K5W027*12	2 series, 6 parallel	36000W 4.5Ω	248.9	3.5	324	362.9
450	355	315	240.3	6200*2	BR1K5W027*14	2 series, 7 parallel	42000W 3.9Ω	290.4	3.5	324	362.9
560	450	355	304.7	6200*3	BR1K5W027*12	2 series, 6 parallel	54000W 3.0Ω	373.3	2.3	486	544.3
630	630	630	426.5	6200*4	BR1K5W027*12	2 series, 6 parallel	72000W 2.3Ω	497.8	1.7	648	725.8

*1 Calculation for 125% brake toque: (kw)*125%*0.8; where 0.8 is motor efficiency.
Because there is a resistor limit of power consumption, the longest operation time for 10%ED is 10sec. (on: 10sec/ off: 90sec.).

*2 Please refer to the Brake Performance Curve for "Operation Duration & ED" vs. "Braking Current".

*3 For heat dissipation, a resistor of 400W or lower should be fixed to the frame and maintain the surface temperature below 50°C; a resistor of 1000W and above should maintain the surface temperature below 350°C.

*4 Please refer to VFDB series Braking Module Instruction for more detail on braking resistor.

NOTE

1. Definition for Brake Usage ED%
   Explanation: The definition of the brake usage ED (%) is for assurance of enough time for the brake unit and brake resistor to dissipate away heat generated by braking. When the brake resistor heats up, the resistance would increase with temperature, and brake torque would decrease accordingly. Recommended cycle time is one minute.

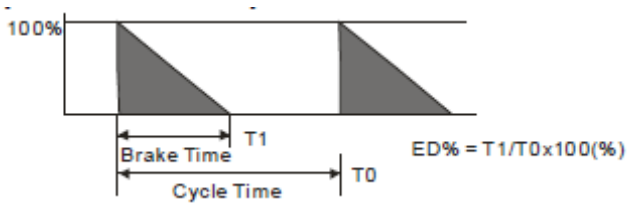

For safety concern, install an overload relay (O.L) between the brake unit and the brake resistor in conjunction with the magnetic contactor (MC) prior to the drive for abnormal protection. The purpose of installing the thermal overload relay is to protect the brake resistor from damage due to frequent brake, or due to brake unit keeping operating resulted from unusual high input voltage. Under such circumstance, just turn off the power to prevent damaging the brake resistor.

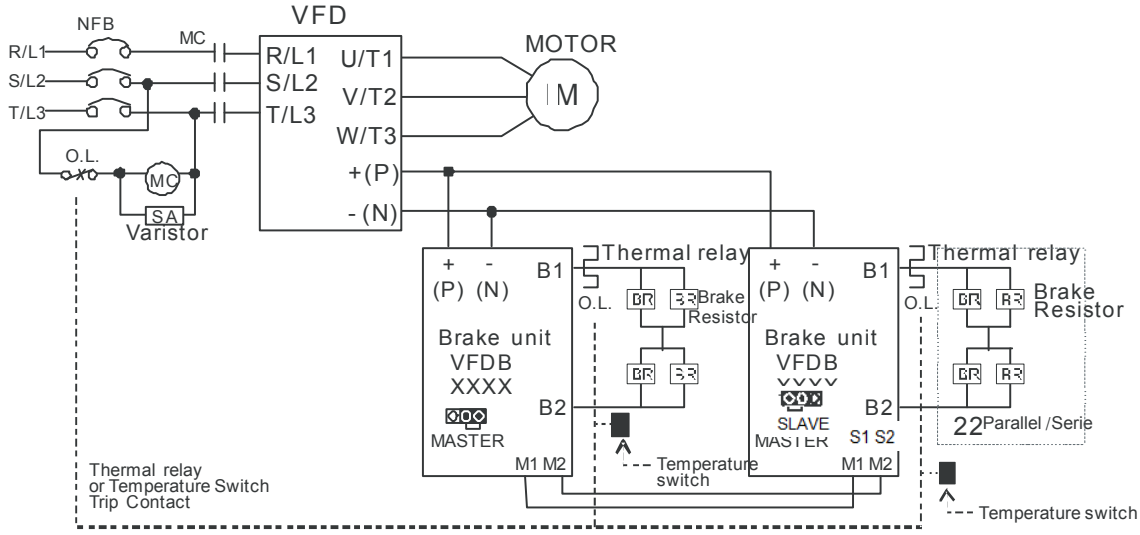

- When AC Drive is equipped with a DC reactor, please read user manual to know the wiring method of input circuit of brake unit +(P)
- Do Not connect input circuit – (N) to the neutral point of the power system.

2. If damage to the drive or other equipment is due to the fact that the brake resistors and brake modules in use are not provided by Delta, the warranty will be void.
3. Take into consideration the safety of the environment when installing the brake resistors. If the minimum resistance value is to be utilized, consult local dealers for the calculation of Watt figures.
4. When using more than 2 brake units, equivalent resistor value of parallel brake unit can't be less than the value in the column "Minimum Equivalent Resistor Value for Each AC Drive" (the right-most column in the table). Please read the wiring information in the user manual of brake unit thoroughly prior to operation
5. This chart is for normal usage; if the AC motor drive is applied for frequent braking, it is suggested to enlarge 2~3 times of the Watts.

6. Thermal Relay:

Thermal relay selection is basing on its overload capability. A standard braking capacity for C2000 is 10%ED (Tripping time=10s). The figure below is an example of 406V, 110kw AC motor drive. It requires the thermal relay to take 260% overload capacity in 10s (Host starting) and the braking current is 126A. In this case, user should select a rated 50A thermal relay. The property of each thermal relay may vary among different manufacturer, please carefully read specification.

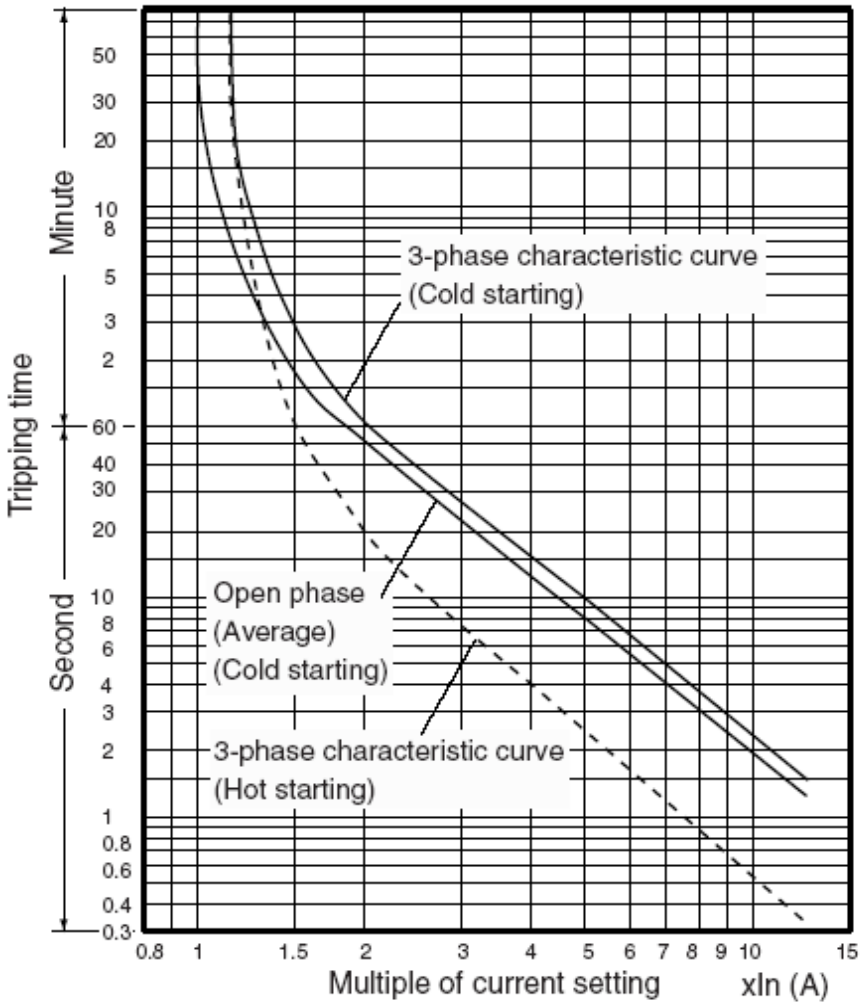

7-2 Non-fuse Circuit Breaker

Comply with UL standard: Per UL 508, paragraph 45.8.4, part a.
The rated current of the breaker shall be 2~4 times of the maximum rated input current of AC motor drive.

3-phase 600V	
Model	Recommended non-fuse breaker (A)
VFD015C53A-21	5
VFD022C53A-21	10
VFD037C53A-21	15
VFD055C53A-21	20
VFD075C53A-21	25
VFD110C53A-21	40
VFD150C53A-21	50

3-phase 690V	
Model	Recommended non-fuse breaker (A)
VFD185C63B-21	50
VFD220C63B-21	60
VFD300C63B-21	60
VFD370C63B-21	80
VFD450C63B-00/63B-21	100
VFD550C63B-00/63B-21	125
VFD750C63B-00/63B-21	150
VFD900C63B-00/63B-21	200
VFD1100C63B-00/63B-21	225
VFD1320C63B-00/63B-21	300
VFD1600C63B-00/63B-21	350
VFD2000C63B-00/63B-21	400
VFD2500C63B-00/63B-21	500
VFD3150C63B-00/63B-21	650
VFD4000C63B-00/63B-21	800
VFD4500C63B-00/63B-21	850
VFD5600C63B-00/63B-21	1200
VFD6300C63B-00/63B-21	1400

7-3 Fuse Specification Chart

1. "For installation in the United States, branch circuit protection must be provided in accordance with the National Electrical Code (NEC) and any applicable local codes. To fulfill this requirement, use the UL classified fuses"
2. For installation in Canada, branch circuit protection must be provided in accordance with Canadian Electrical Code and any applicable provincial codes. To fulfill this requirement, use the UL classified fuses"

600V Model	Input Current I (A)			Line Fuse		
	LD	ND	HD	I (A)	Model	Brand
VFD015C53A-21	3.8	3.1	2.6	7	KLKD007.T	Littelfuse
VFD022C53A-21	5.4	4.5	3.8	10	KLKD010.T	Littelfuse
VFD037C53A-21	10.4	7.2	5.8	15	KLKD015.T	Littelfuse
VFD055C53A-21	14.9	12.3	10.7	25	25ET	Bussmann
VFD075C53A-21	16.9	15	12.5	32	32ET	Bussmann
VFD110C53A-21	21.3	18	16.9	50	50FE	Bussmann
VFD150C53A-21	26.3	22.8	19.7	63	63FE	Bussmann

690V Model	Input Current I (A)			Line Fuse	
	LD	ND	HD	I (A)	Bussmann P/N
VFD185C63B-21	29	24	20	60	JJS-60
VFD220C63B-21	36	29	24	70	JJS-70
VFD300C63B-21	43	36	29	80	JJS-80
VFD370C63B-21	54	43	36	100	JJS-100
VFD450C63B-00/63B-21	54	45	36	100	JJS-100
VFD550C63B-00/63B-21	67	54	45	125	JJS-125
VFD750C63B-00/63B-21	84	66	53	175	JJS-175
VFD900C63B-00/63B-21	102	84	66	200	JJS-200
VFD1100C63B-00/63B-21	122	102	84	250	JJS-250
VFD1320C63B-00/63B-21	147	122	102	300	JJS-300
VFD1600C63B-00/63B-21	178	148	123	350	JJS-350
VFD2000C63B-00/63B-21	217	178	148	400	JJS-400
VFD2500C63B-00/63B-21	292	222	181	450	170M4063
VFD3150C63B-00/63B-21	353	292	222	500	170M6058
VFD4000C63B-00/63B-21	454	353	292	700	170M6061
VFD4500C63B-00/63B-21	469	388	313	800	170M6062
VFD5600C63B-00/63B-21	595	504	423	1250	170M6063
VFD6300C63B-00/63B-21	681	681	681	1400	170M6067

7-4 AC/DC Reactor

AC Input Reactor

Installing AC reactor in the input side of AC motor drive can increase line impedance, improve power factor, reduce input current, increase system capacity and reduce interference generated from motor drive. In addition, to suppress the momentary voltage surge or abnormal current spike is also one of its features. For example, when the capacity of main power is higher than 500 kVA, or switching to capacity bank, the momentary voltage and current spike may damage motor drive's internal circuit. Therefore, installing AC reactor in the input side of AC motor drive can suppress the surge to protect the AC motor drive.

Installation

AC input reactor is installed serially between the mains power and three phases input side of motor drive, which is shown as below:

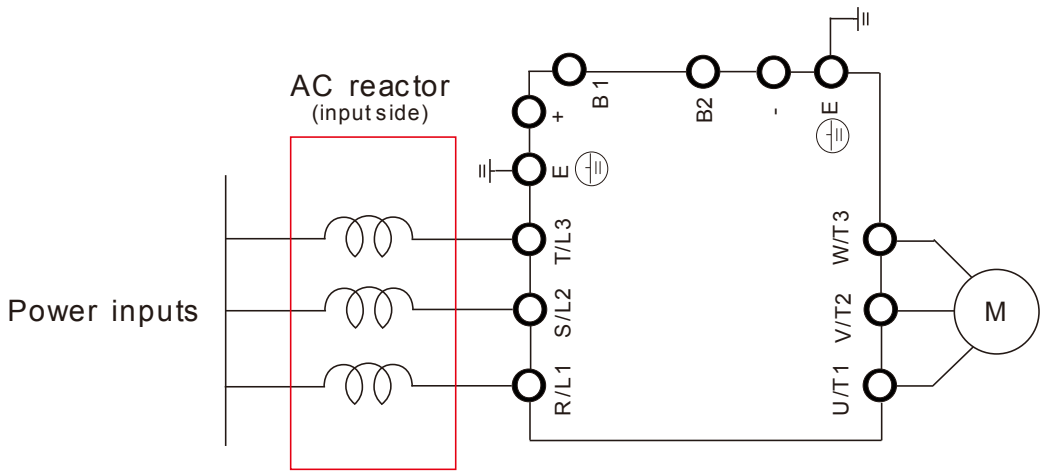

Wiring of AC input reactor

AC Output reactor

Because motor drive control output voltage and frequency by PWM signals driving power transistors switching, the voltage rapid rise and fall (dv/dt) frpm switching will lead to voltage uneven distribution inside the motor and cause insulation deterioration, bearing currents, and electromagnetic interference. Especially when there is longer cable length connected between motor drive and motor, the damping will lead to high frequency resonator, and make impedance matching poor to enlarge the voltage reflection. This phenomenon will generate twice input voltage in motor side, which will easily make motor voltage overshoot to damage insulation.

Installation

AC output reactor is serially connected between motor drive UVW output side and motor, which is shown as below:

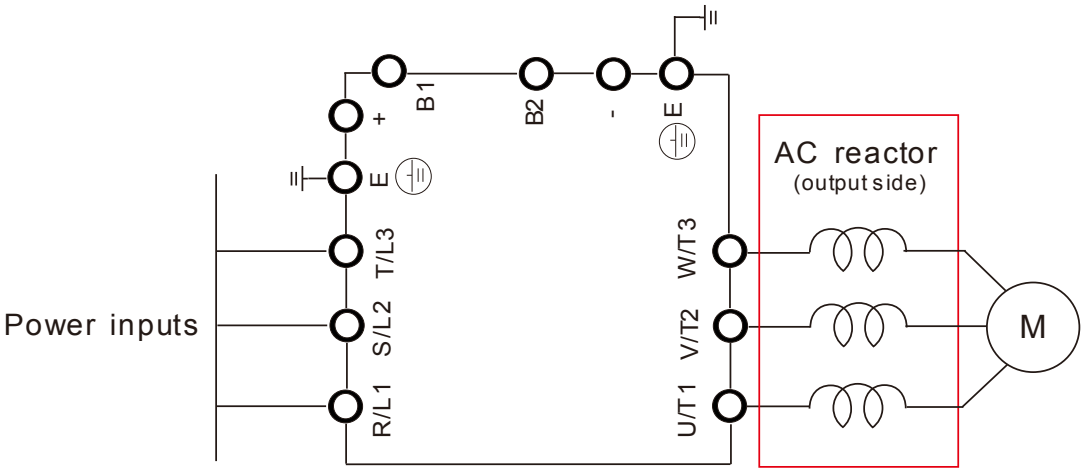

Wiring of AC output reactor

Following table is suggested value of reactor

600V, 50/60Hz, 3-phase

KW	HP	Rated Current (Arms)			Saturation Current (Arms)	3% Impedance (mH)			5% Impedance (mH)		
		LD	ND	HD		LD	ND	HD	LD	ND	HD
VFD015C53A-21	2	3	2.5	2.1	4.2	8.806	10.567	12.580	14.677	17.612	20.967
VFD022C531-21	3	4.3	3.6	3	5.9	6.144	7.338	8.806	10.239	12.230	14.677
VFD037C53A-21	5	6.7	5.5	4.6	9.1	3.943	4.803	5.743	6.572	8.005	9.572
VFD055C53A-21	7.5	9.9	8.2	6.9	13.7	2.668	3.222	3.829	4.447	5.369	6.381
VFD075C53A-21	10	12.1	10	8.3	16.5	2.183	2.642	3.183	3.639	4.403	5.305
VFD110C53A-21	15	18.7	15.5	13	25.7	1.413	1.704	2.032	2.355	2.841	3.387
VFD150C53A-21	20	24.2	20	16.8	33.3	1.092	1.321	1.572	1.819	2.201	2.621

690V, 50/60Hz, 3-phase

KW	HP	Rated Current (Arms)			Saturation Current (Arms)			3% Impedance (mH)			5% Impedance (mH)		
		LD	ND	HD	LD	ND	HD	LD	ND	HD	LD	ND	HD
VFD185C63B-21	25	24	20	14	28.8	30.0	25.2	1.585	1.902	2.717	2.642	3.170	4.529
VFD220C63B-21	30	30	24	20	36.0	36.0	36.0	1.268	1.585	1.902	2.113	2.642	3.170
VFD300C63B-21	40	36	30	24	43.2	45.0	43.2	1.057	1.268	1.585	1.761	2.113	2.642
VFD370C63B-21	50	45	36	30	54.0	54.0	54.0	0.845	1.057	1.268	1.409	1.761	2.113
VFD450C63B-00/21	60	54	45	36	64.8	67.5	64.8	0.704	0.845	1.057	1.174	1.409	1.761
VFD550C63B-00/21	75	67	54	45	80.4	81.0	81.0	0.568	0.704	0.845	0.946	1.174	1.409
VFD750C63B-00/21	100	86	67	54	103.2	100.5	97.2	0.442	0.568	0.704	0.737	0.946	1.174
VFD900C63B-00/21	125	104	86	67	124.8	129.0	120.6	0.366	0.442	0.568	0.610	0.737	0.946
VFD1100C63B-00/21	150	125	104	86	150.0	156.0	154.8	0.304	0.366	0.442	0.507	0.610	0.737
VFD1320C63B-00/21	175	150	125	104	180.0	187.5	187.2	0.254	0.304	0.366	0.423	0.507	0.610
VFD1600C63B-00/21	215	180	150	125	216.0	225.0	225.0	0.211	0.254	0.304	0.352	0.423	0.507
VFD2000C63B-00/21	270	220	180	150	264.0	270.0	270.0	0.173	0.211	0.254	0.288	0.352	0.423
VFD2500C63B-00/21	335	290	220	180	348.0	330.0	324.0	0.131	0.173	0.211	0.219	0.288	0.352
VFD3150C63B-00/21	425	350	290	220	420.0	435.0	396.0	0.109	0.131	0.173	0.181	0.219	0.288
VFD4000C63B-00/21	530	430	350	290	516.0	525.0	522.0	0.088	0.109	0.131	0.147	0.181	0.219
VFD4500C63B-00/21	600	465	385	310	558.0	577.5	558.0	0.082	0.099	0.123	0.136	0.165	0.205
VFD5600C63B-00/21	745	590	465	420	708.0	697.5	756.0	0.064	0.082	0.091	0.107	0.136	0.151
VFD6300C63B-00/21	850	675	675	675	810.0	1012.5	1215.0	0.056	0.056	0.056	0.094	0.094	0.094

DC reactor

DC reactor can also increase line impedance, improve power factor, reduce input current, increase system capacity and reduce interference generated from motor drive. In addition, DC reactor can stabilize DC side voltage of motor drive. In contrast to AC input reactor, the advantages are smaller size, lower price and lower voltage drop (lower power dissipation)

Installation

DC reactor is installed in the terminal +1 and +2. The jumper needs to be removed before installation, which is shown as below:

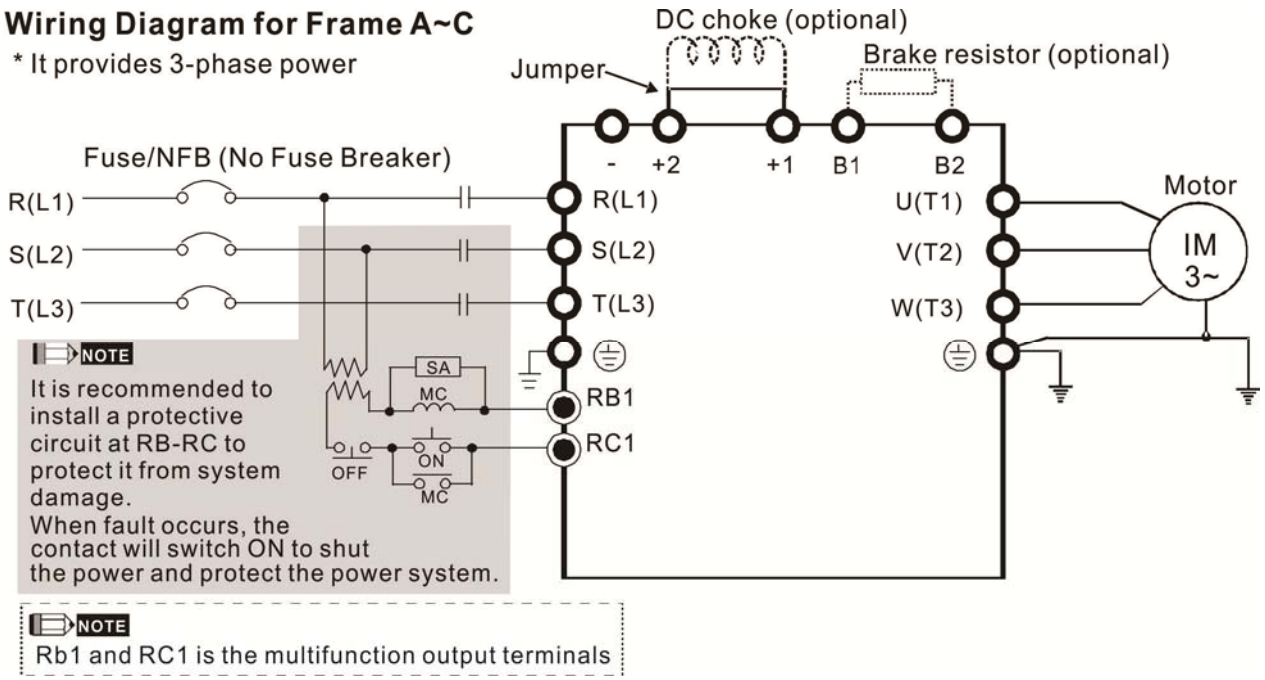

Wiring of DC reactor

Following table is suggested value of reactor

600V DC Choke

KW	HP	Rated Current (Arms)			Saturation Current (Arms)	4% DC Reactor (mH)		
		LD	ND	HD		LD	ND	HD
VFD015C53A-21	2	3	2.5	2.1	4.2	20.336	24.404	29.052
VFD022C531-21	3	4.3	3.6	3	5.9	14.188	16.947	20.336
VFD037C53A-21	5	6.7	5.5	4.6	9.1	9.106	11.093	13.263
VFD055C53A-21	7.5	9.9	8.2	6.9	13.7	6.163	7.440	8.842
VFD075C53A-21	10	12.1	10	8.3	16.5	5.042	6.101	7.351
VFD110C53A-21	15	18.7	15.5	13	25.7	3.263	3.936	4.693
VFD150C53A-21	20	24.2	20	16.8	33.3	2.521	3.050	3.632

690V DC Choke

KW	HP	Rated Current (Arms)			Saturation Current (Arms)			4% DC Reactor (mH)		
		LD	ND	HD	LD	ND	HD	LD	ND	HD
VFD185C63B-21	25	24	20	14	28.8	30.0	25.2	3.661	4.393	6.275
VFD220C63B-21	30	30	24	20	36.0	36.0	36.0	2.928	3.661	4.393
VFD300C63B-21	40	36	30	24	43.2	45.0	43.2	2.440	2.928	3.661
VFD370C63B-21	50	45	36	30	54.0	54.0	54.0	1.952	2.440	2.928

Following Models have in-built DC reactor:

Frame D	VFD450C63B-00; VFD550C63B-00 VFD450C63B-21; VFD550C63B-21
Frame E	VFD750C63B-00; VFD900C63B-00; VFD1100C63B-00; VFD1320C63B-00 VFD750C63B-21; VFD900C63B-21; VFD1100C63B-21; VFD1320C63B-21
Frame F	VFD1600C63B-00; VFD2000C63B-00 VFD1600C63B-21; VFD2000C63B-21
Frame G	VFD2500C63B-00; VFD3150C63B-00 VFD2500C63B-21; VFD3150C63B-21
Frame H	VFD4000C63B-00; VFD4500C63B-00; VFD5600C63B-00; VFD6300C63B-00 VFD4000C63B-21; VFD4500C63B-21; VFD5600C63B-21; VFD6300C63B-21

Motor Cable Length

1. Leakage current to affect the motor and counter measurement

   If the cable length is too long, the parasitic capacitance between cables will enlarge and may increase leakage current. It will activate the protection of over current, and increased leakage current will not ensure the correction of current value in display. The worst case is that AC motor drive may damage.

   If more than one motor is connected to the AC motor drive, the total wiring length is the sum of the wiring length from AC motor drive to each motor.

   For the 460V series AC motor drive, when an overload relay is installed between the drive and the motor to protect motor from overheating, the connecting cable must be shorter than 50m. However, an overload relay malfunction may still occur. To prevent the malfunction, install an output reactor (optional) to the drive or lower the carrier frequency setting (Pr. 00-17).

2. Surge voltage to affect the motor and counter measurement

   When motor is driven by a PWM signal of AC motor drive, the motor terminals will experience surge voltages (dv/dt) easily due to power transistors conversion of AC motor drive and cable capacitance. When the motor cable is very long (especially for the 460V series), surge voltages (dv/dt) may reduce insulation quality. To prevent this situation, please follow the rules below:

   a. Use a motor with enhanced insulation
   b. Connect an output reactor (optional) to the output terminals of the AC motor drive
   c. Reduce the motor cable length to suggested value

600V

Model	KW	HP	Rated Current	Without Output Choke		With Output Choke	
			Normal Duty (Arms)	Shielded Cable (meter)	Unshielded Cable (meter)	Shielded Cable (meter)	Unshielded Cable (meter)
VFD015C53A-21	0.75	1	2.5	35	30	45	20
VFD022C531-21	1.5	2	3.6	35	30	45	20
VFD037C53A-21	2.2	3	5.5	35	30	45	20
VFD055C53A-21	3.7	5	8.2	35	30	45	20
VFD075C53A-21	5.5	7.5	10	35	30	45	20
VFD110C53A-21	7.5	10	15.5	35	30	45	20
VFD150C53A-21	11	15	20	35	30	45	20

690V

Model	KW	HP	Rated Current	Without Output Choke		With Output Choke	
			Normal Duty (Arms)	Shielded Cable (meter)	Unshielded Cable (meter)	Shielded Cable (meter)	Unshielded Cable (meter)
VFD185C63B-21	18.5	25	20	20	35	30	45
VFD220C63B-21	22	30	24	20	35	30	45
VFD300C63B-21	30	40	30	20	35	45	60
VFD370C63B-21	37	50	36	20	45	60	75
VFD450C63B-00/21	45	60	45	20	45	60	75
VFD550C63B-00/21	55	75	54	20	45	60	100
VFD750C63B-00/21	75	100	67	20	45	60	100
VFD900C63B-00/21	90	125	86	20	45	75	100
VFD1100C63B-00/21	110	150	104	20	45	75	100
VFD1320C63B-00/21	132	175	125	20	45	75	100
VFD1600C63B-00/21	160	215	150	20	45	90	100
VFD2000C63B-00/21	200	270	180	20	45	90	100
VFD2500C63B-00/21	250	335	220	20	45	90	100
VFD3150C63B-00/21	315	425	290	20	45	90	100
VFD4000C63B-00/21	400	530	350	20	45	90	100
VFD4500C63B-00/21	450	600	385	20	45	90	100
VFD5600C63B-00/21	560	745	465	20	45	75	90
VFD6300C63B-00/21	630	850	675	20	45	75	90

690V output motor cable length needs to comply with IEC 60034-25.

Figure14. Curve B is the regulation of motor insulation:

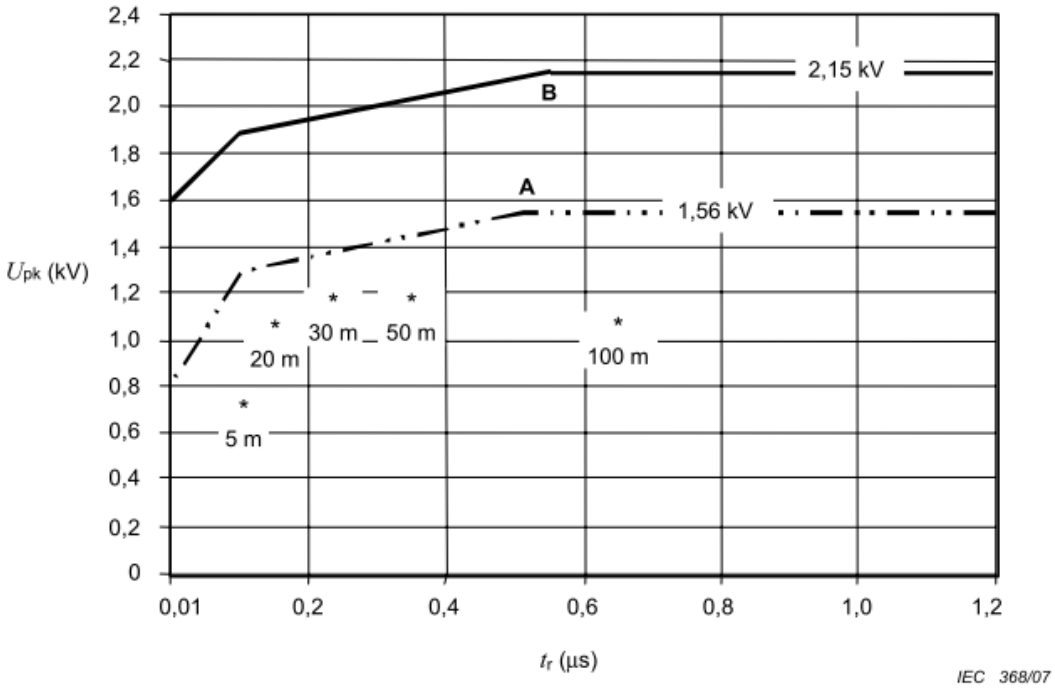

Key

A Without filters for motors up to 500 V a.c.

B Without filters for motors up to 690 V a.c.

* Examples of measured results at 415 V supply, for different lengths of steel armoured cable

Figure 14 – Limiting curves of impulse voltage U_{pk}, measured between two motor phase terminals, as a function of the *peak rise time* t_r

The definition of t_r is:

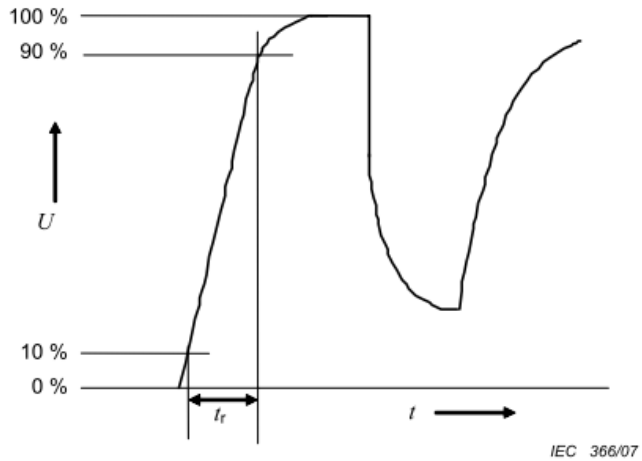

7-5 Zero Phase Reactors

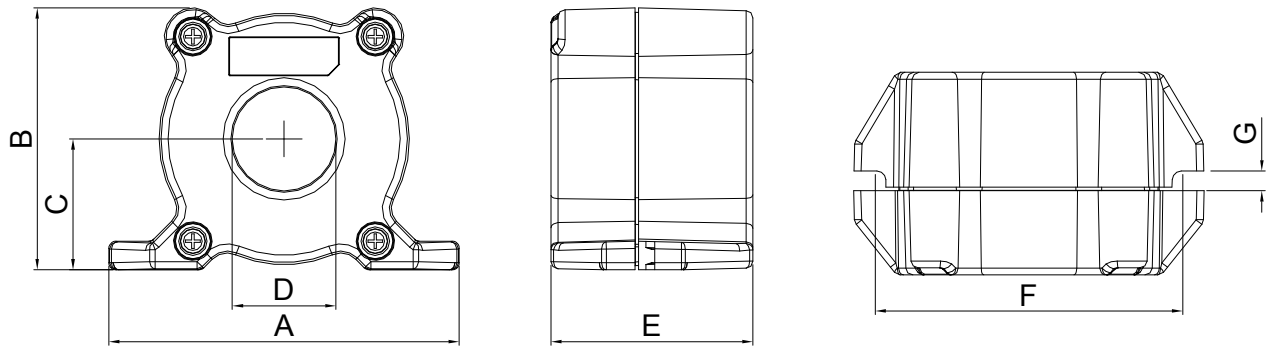

UNIT: mm (inch)

Model	A	B	C	D	E	F	G(Ø)	Torque
RF008X00A	98 (3.858)	73 (2.874)	36.5 (1.437)	29 (1.142)	56.5 (2.224)	86 (3.386)	5.5 (0.217)	< 10kgf/cm^2

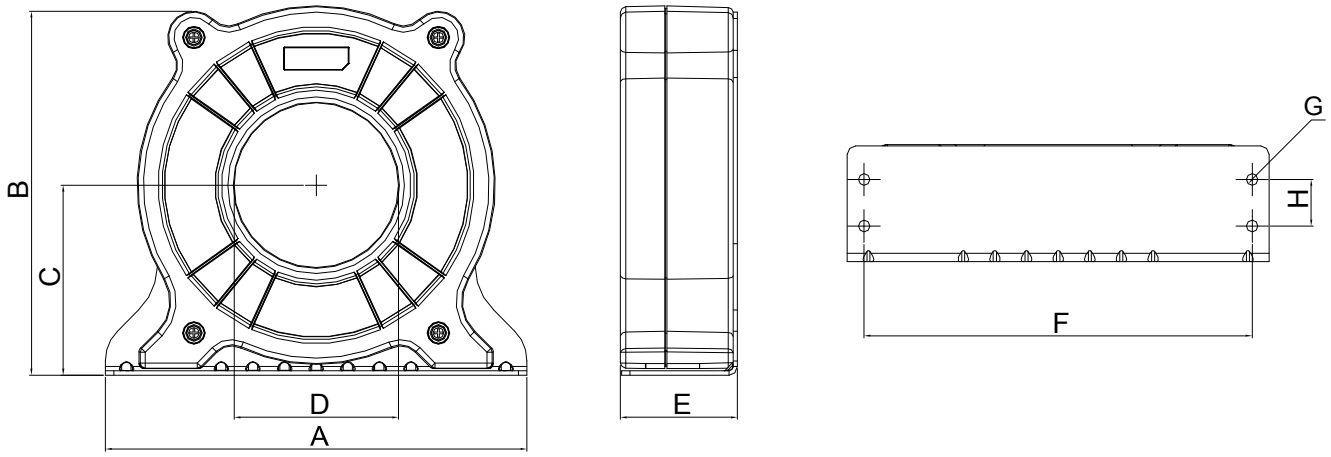

UNIT: mm (inch)

Model	A	B	C	D	E	F	G(Ø)	H	Torque
RF002X00A	200 (7.874)	172.5 (6.791)	90 (3.543)	78 (3.071)	55.5 (2.185)	184 (7.244)	5.5 (0.217)	22 (0.866)	<45kgf/cm^2

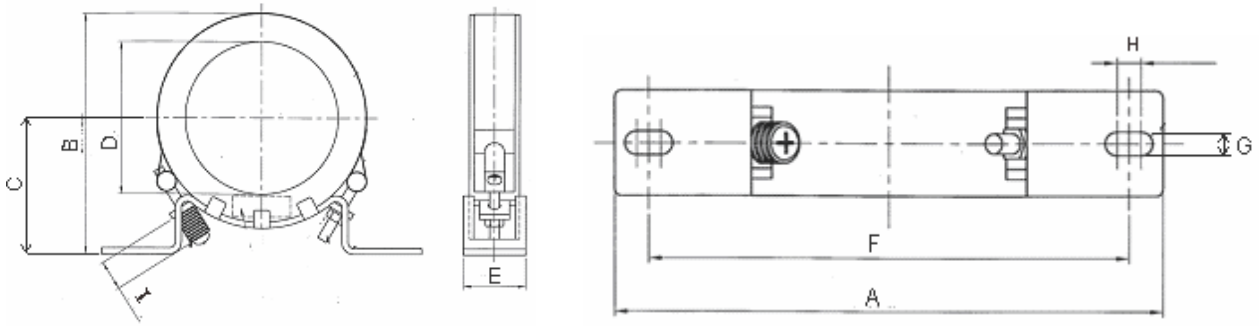

UNIT: mm (inch)

Model	A	B	C	D	E	F	G(Ø)	H	I
RF300X00A	241(9.488)	217(8.543)	114(4.488)	155(6.102)	42(1.654)	220(8.661)	6.5(0.256)	7.0(0.276)	20(0.787)

Reactor Model (Note)	Recommended Wire Size		Wiring Method	Qty	Corresponding Motor Drives
RF008X00A	≤ 8WG	≤ 8.37 mm 2	Diagram A	1	VFD015C53A-21, VFD022C53A-21, VFD037C53A-21, VFD055C53A-21, VFD075C53A-21, VFD110C53A-21, VFD150C53A-21
RF002X00A	≤ 2 AWG	≤ 33.62 mm 2	Diagram A	1	VFD185C63B-21，VFD220C63B-21 VFD300C63B-21，VFD370C63B-21 VFD450C63B-00，VFD550C63B-00 VFD450C63B-21，VFD550C63B-21
RF300X00A	≤ 300 MCM	≤ 152 mm 2	Diagram A	1	VFD750C63B-00，VFD900C63B-00 VFD1100C63B-00, VFD1320C63B-00 VFD750C63B-21, VFD900C63B-21 VFD1100C63B-21, VFD1320C63B-21 VFD1600C63B-00, VFD2000C63B-00 VFD1600C63B-21, VFD2000C63B-21 VFD2500C63B-00, VFD3150C63B-00 VFD2500C63B-21, VFD3150C63B-21 VFD4000C63B-00, VFD4500C63B-00 VFD5600C63B-00, VFD6300C63B-00, VFD4000C63B-21, VFD4500C63B-21 VFD5600C63B-21, VFD6300C63B-21

Diagram A

Please put all wires through at least one core without winding.

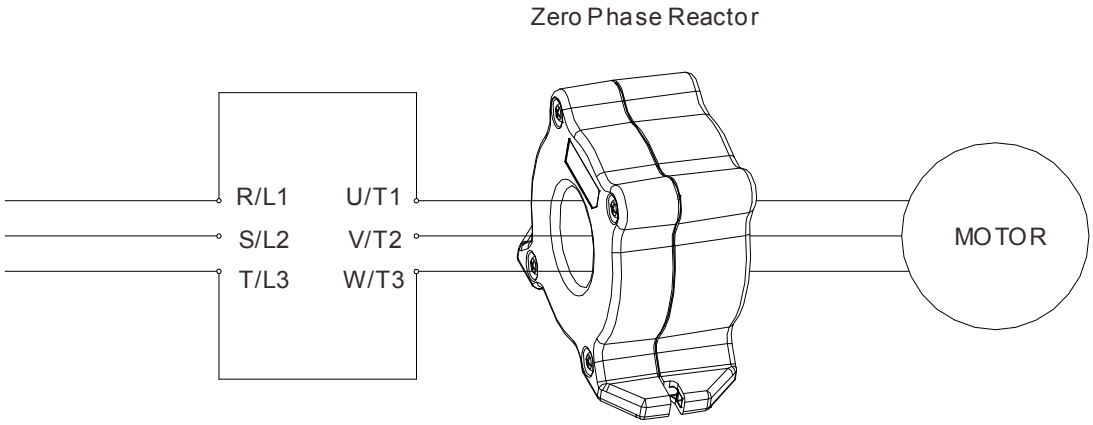

Note 1: The table above gives approximate wire size for the zero phase reactors but the selection is ultimately governed by the type and diameter of cable fitted i.e. the cable must fit through the center hole of zero phase reactors.

Note 2: Only the phase conductors should pass through, not the earth core or screen.

Note 3: When long motor output cables are used an output zero phase reactor may be required to reduce radiated emissions from the cable.

Ferrite core

Model: T60006-L2040-W453

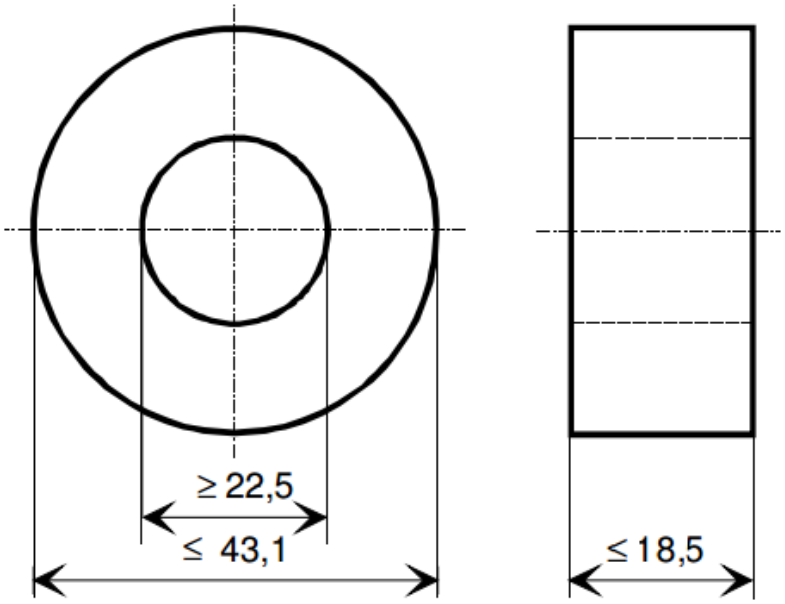

Model:T60006-L2050-W565

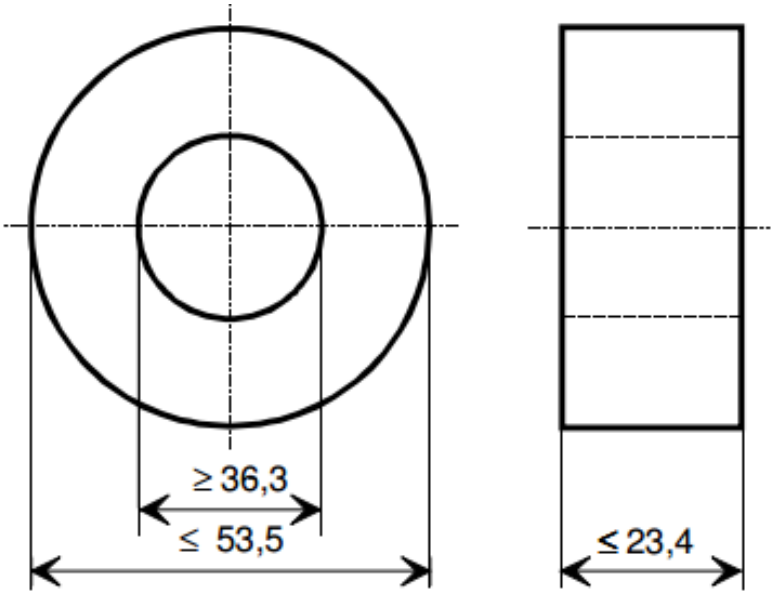

Model:T60006-L2160-V066

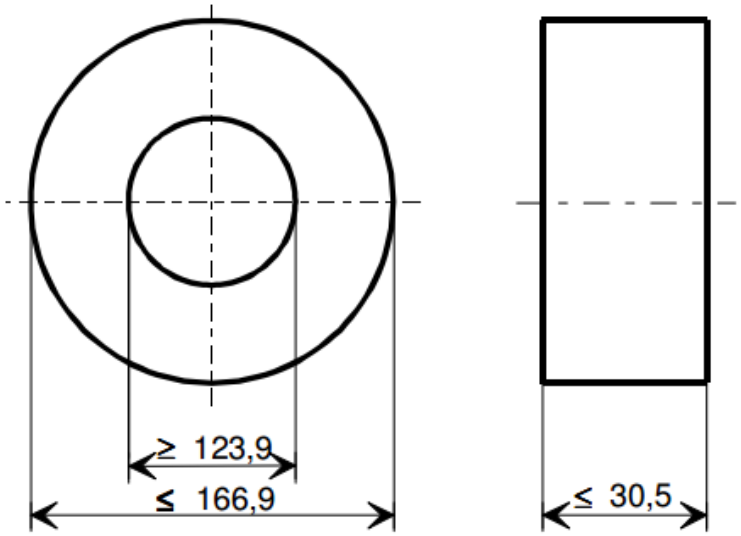

Model:T60004-L2016-W620

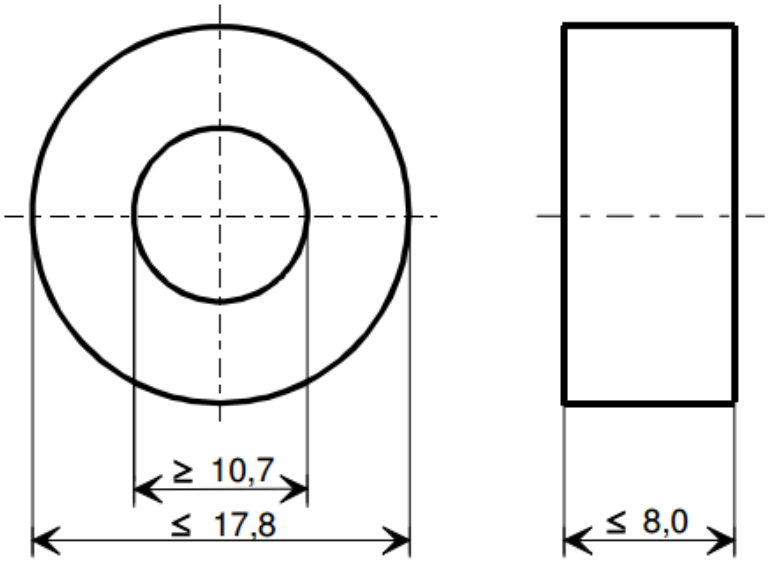

Model:T60004-L2025-W622

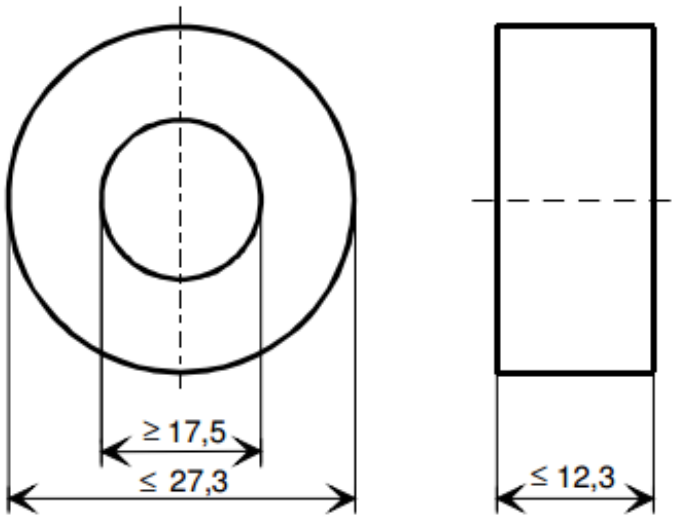

Function	Model	Dimension outer diameter* inside diameter * thickness (mm)
For control cable	T60004L2016W620	16*12.5*6
For control cable	T60004L2025W622	25*20*10
For motor cable	T60006L2040W453	40*25*15
For motor cable	T60006L2050W565	50*40*20
For motor cable	T60006L2160V066	160*130*25

7-6 EMC Filter

Following table is the external EMC filter of C2000 series, user can choose corresponding zero phase reactor and suitable shielded cable length in accord to required noise emission and electromagnetic interference level to have the best configuration to suppress the electromagnetic interference.

Frame	Model	Rated Input Current (A)	Min. Wire Gauge (Cross-sectional area)	Max. Wire Gauge (Diameter)	Model of Recommended Zero-phase Reactor	Filter: EPCOS
A	VFD015C53A-21	3.8	14AWG(2.08mm²)	8AWG (8.37mm²)	RF008X00A	EMF008A63A
	VFD022C53 -21	5.4			RF008X00A	EMF008A63A
	VFD037C53A 21	10 4			RF008X00A	EMF014A63A
B	VFD055C53A- 1	14.9	10AWG(5.26mm²)	4AWG (21.15mm²)	RF008X00A	EMF027A63A
	VFD075C53A-21	16.9			RF008X00A	EMF027A63A
	VFD110C53A 21	21.3	8AWG (8.37mm²)		RF008X00A	EMF027A63A
	VF 150C53A-21	26.3			RF008X00A	EMF027A6 A
C	VFD185C63B-21;	29	8 AWG (8.837mm2)	1/0 AWG (53.5mm2)	RF002X00A	B84143A0050R021
	VFD220C63B-21;	36	6 AWG (13.30mm2)		RF002X00A	B84143A0050R021
	VFD300C63B-21;	43	4 AWG (21.15mm2)		RF002X00A	B84143A0050R021
	VFD370C63B-21	54	3 AWG (26.67mm2)		RF002X00A	B84143A0080R021
D	VFD450C63B-00;	54	3 AWG (26.67mm2)	4/0 AWG. (107mm2)	RF002X00A	B84143A0080R021
	VFD550C63B-00;	67	2 AWG (33.60mm2)		RF002X00A	B84143A0080R021
	VFD450C63B-21;	54	3 AWG (26.67mm2)		RF002X00A	B84143A0080R021
	VFD550C63B-21;	67	2 AWG (33.60mm2)		RF002X00A	B84143A0080R021
E	VFD750C63B-00;	84	4 AWG*2 (21.15mm2*2)	4/0 AWG*2 (107mm2*2)	RF300X00A	B84143A0120R021
	VFD900C63B-00;	102	3 AWG*2 (26.67mm2*2)		RF300X00A	B84143A0120R021
	VFD1100C63B-00;	122	2 AWG*2 (60mm2*2)		RF300X00A	B84143B0150S021
	VFD1320C63B-00	147	1 AWG*2 (42.41mm2*2)		RF300X00A	B84143B0150S021
	VFD750C63B-21;	84	4 AWG*2 (21.15mm2*2)		RF300X00A	B84143A0120R021
	VFD900C63B-21;	102	3 AWG*2 (26.67mm2*2)		RF300X00A	B84143A0120R021
	VFD1100C63B-21;	122	2 AWG*2 (60mm2*2)		RF300X00A	B84143B0150S021
	VFD1320C63B-21	147	1 AWG*2 (42.41mm2*2)		RF300X00A	B84143B0150S021
F	VFD1600C63B-00;	178	2/0 AWG*2 (67.43mm2*2)	4/0 AWG*2 (107mm2*2)	RF300X00A	B84143B0250S021
	VFD2000C63B-00;	217	3/0 AWG*2 (84.95mm2*2)		RF300X00A	B84143B0250S021
	VFD1600C63B-21;	178	2/0 AWG*2 (67.43mm2*2)		RF300X00A	B84143B0250S021
	VFD2000C63B-21;	217	3/0 AWG*2 (84.95mm2*2)		RF300X00A	B84143B0250S021
G	VFD2500C63B-00;	292	250MCM*2 (127mm2*2)	500MCM*2 (253mm2*2)	RF300X00A	B84143B0400S021
	VFD3150C63B-00;	353	350MCM*2 (177mm2*2)		RF300X00A	B84143B0400S021
	VFD2500C63B-21;	292	250MCM*2 (127mm2*2)		RF300X00A	B84143B0400S021
	VFD3150C63B-21;	353	350MCM*2 (177mm2*2)		RF300X00A	B84143B0400S021
H	VFD4000C63B-00;	454	3/0 AWG*4 (84.95mm2*4)	300MCM*4 (152mm*4)	RF300X00A	B84143B0600S021
	VFD4500C63B-00;	469	3/0 AWG*4 (84.95mm2*4)		RF300X00A	B84143B0600S021
	VFD5600C63B-00	595	250MCM*4 (127mm2*4)		RF300X00A	B84143B0600S021
	VFD6300C63B-00		300MCM*4 (152mm2*4)		RF300X00A	B84143B1000S021
	VFD4000C63B-21;	454	3/0 AWG*4(84.95mm2*4)		RF300X00A	B84143B0600S021
	VFD4500C63B-21;	469	3/0 AWG*4 (84.95mm2*4)		RF300X00A	B84143B0600S021
	VFD5600C63B-21	595	250MCM*4 (127mm2*4)		RF300X00A	B84143B0600S021
	VFD6300C63B-21		300MCM*4 (152mm2*4)		RF300X00A	B84143B1000S021

Frame	Drive Model	Model of Recommended Filter	Model of Recommended Zero-phase reactor	conducted and radiated emission					
				C2-motor cable length-50m			C3-motor cable length-100m		
				Please refer to below figure for Zero-phase reactor installation location					
				1*	2*	3*	1*	2*	3*
A	VFD015C53A-21	EMF014A63A	T60006L2040W453			1			1
	VFD022C53A-21					1			1
	VFD037C53A-21					1			1
B	VFD055C53A-21	EMF027A63A			1	1		1	1
	VFD075C53A-21				1	1		1	1
	VFD110C53A-21				1	1		1	1
	VFD150C53A-21				1	1		1	1
C	VFD185C63B-21;	B84143A0050R021	T60006L2050W565						
	VFD220C63B-21;								
	VFD300C63B-21;								
	VFD370C63B-21								
D	VFD450C63B-00;	B84143A0080R021						1	2
	VFD550C63B-00;							1	2
	VFD450C63B-21;							1	2
	VFD550C63B-21;							1	2
E	VFD750C63B-00;	B84143B0150S021	T60006L2160V066						
	VFD900C63B-00;								
	VFD1100C63B-00;								
	VFD1320C63B-00								
	VFD750C63B-21;								
	VFD900C63B-21;								
	VFD1100C63B-21;								
	VFD1320C63B-21								
F	VFD1600C63B-00;	B84143B0250S021							
	VFD2000C63B-00;								
	VFD1600C63B-21;								
	VFD2000C63B-21;								
G	VFD2500C63B-00;	B84143B0400S021							
	VFD3150C63B-00;								
	VFD2500C63B-21;								
	VFD3150C63B-21;								
H	VFD4000C63B-00;	B84143B1000S021						1	1
	VFD4500C63B-00;							1	1
	VFD5600C63B-00							1	1
	VFD6300C63B-00							1	1
	VFD4000C63B-21;							1	1
	VFD4500C63B-21;							1	1
	VFD5600C63B-21							1	1
	VFD6300C63B-21							1	1

※ The number in the table means the installation number of zero-phase reactor, the motor cables are shielded cable.

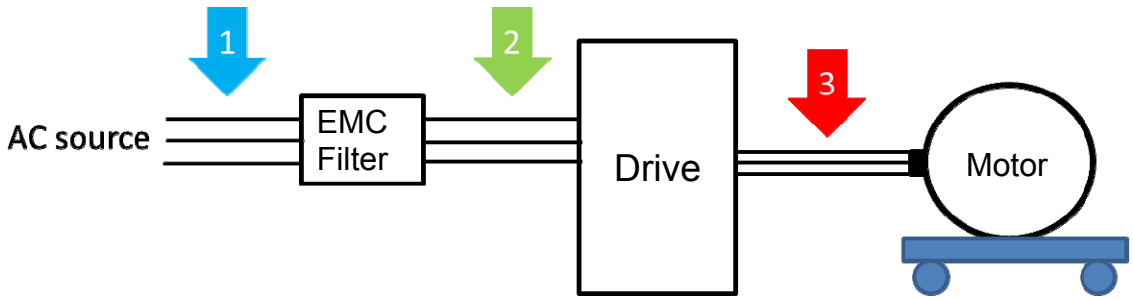

EMC Filter

Model: EMF014A63A

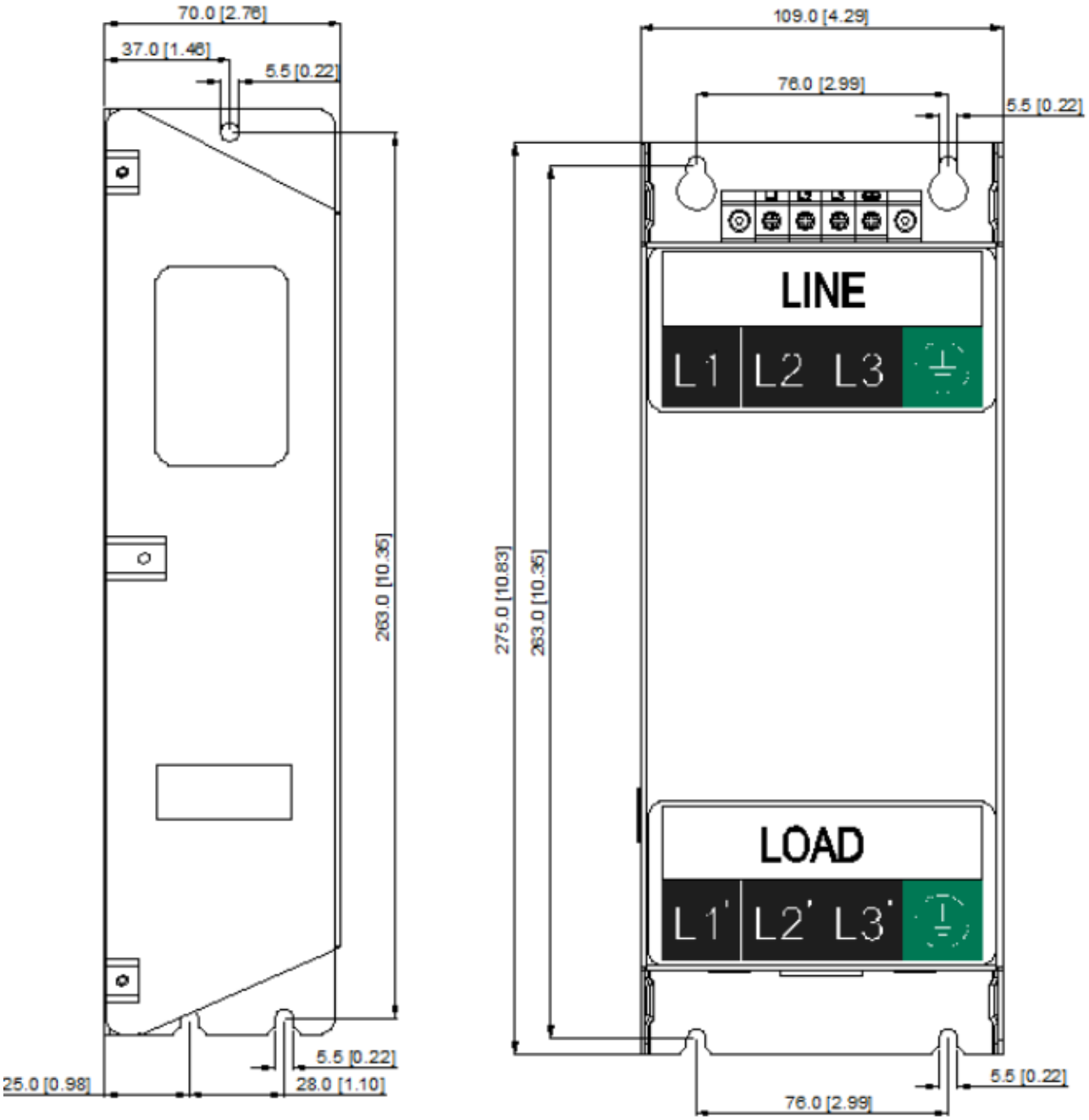

Unit: mm [inch]

Model: EMF027A63A

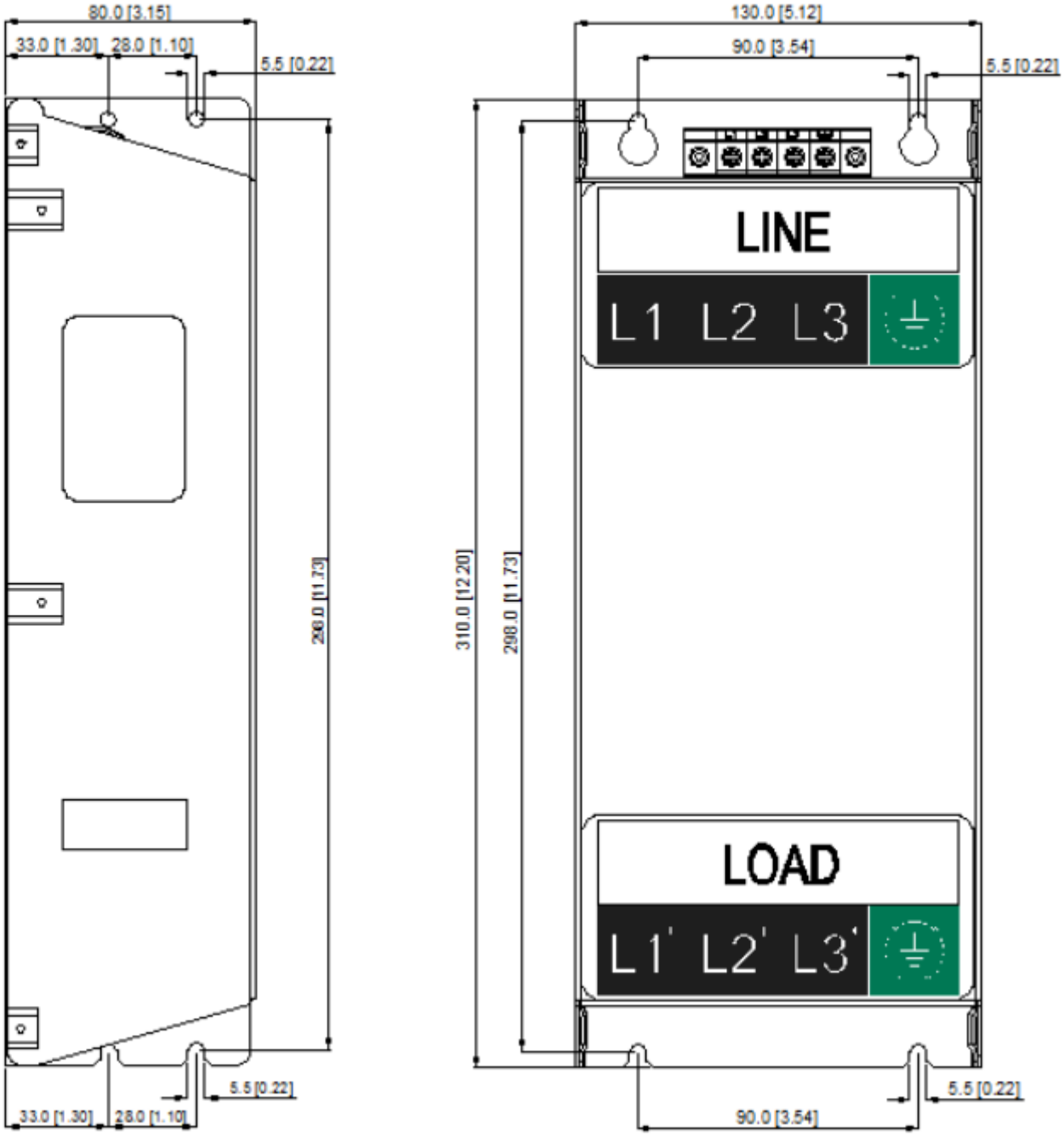

Unit: mm [inch]

Model: B84143A0050R021

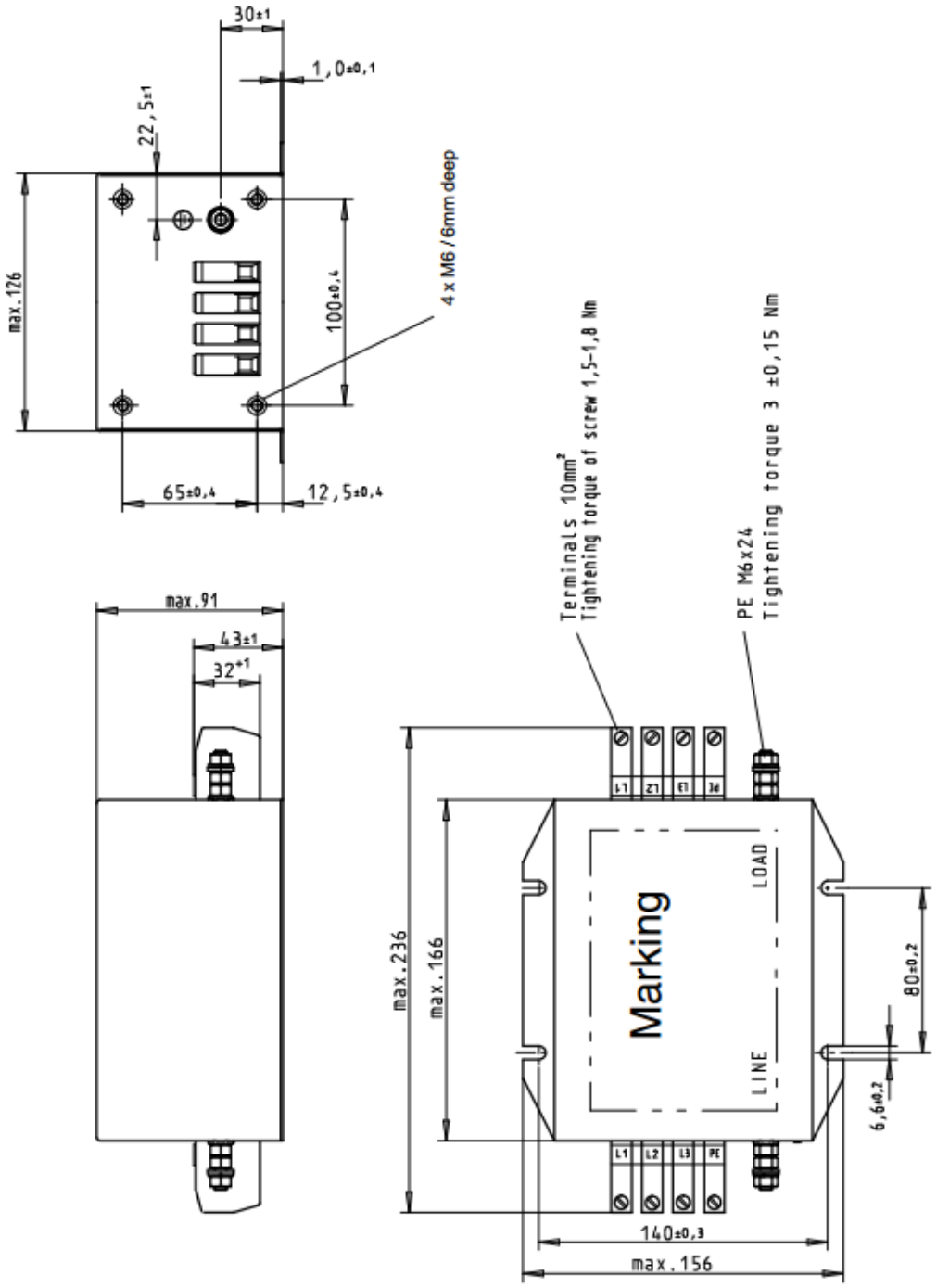

Unit: mm

Model: B84143A0080R021

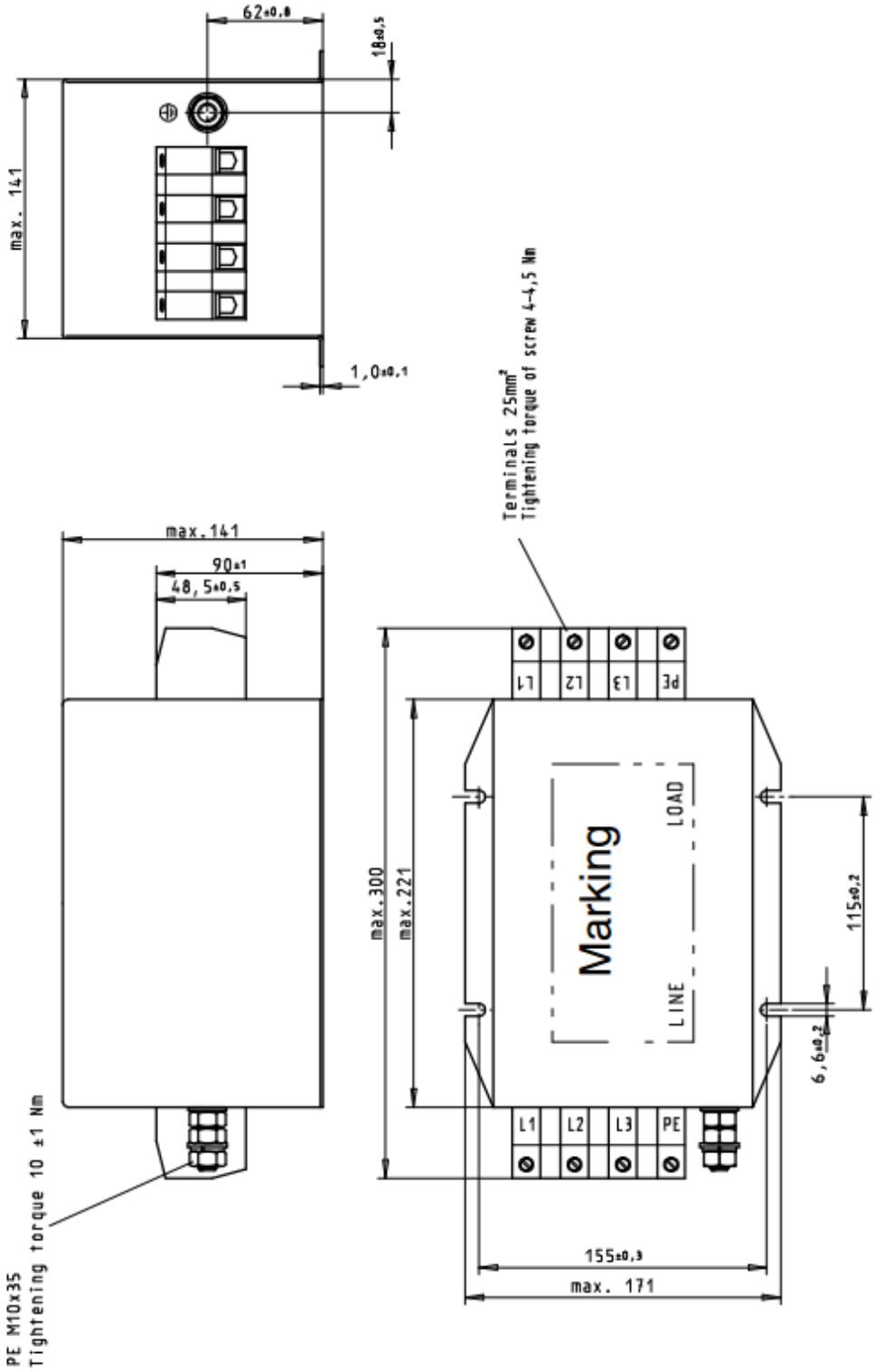

Unit: mm

Model: B84143B0150S021

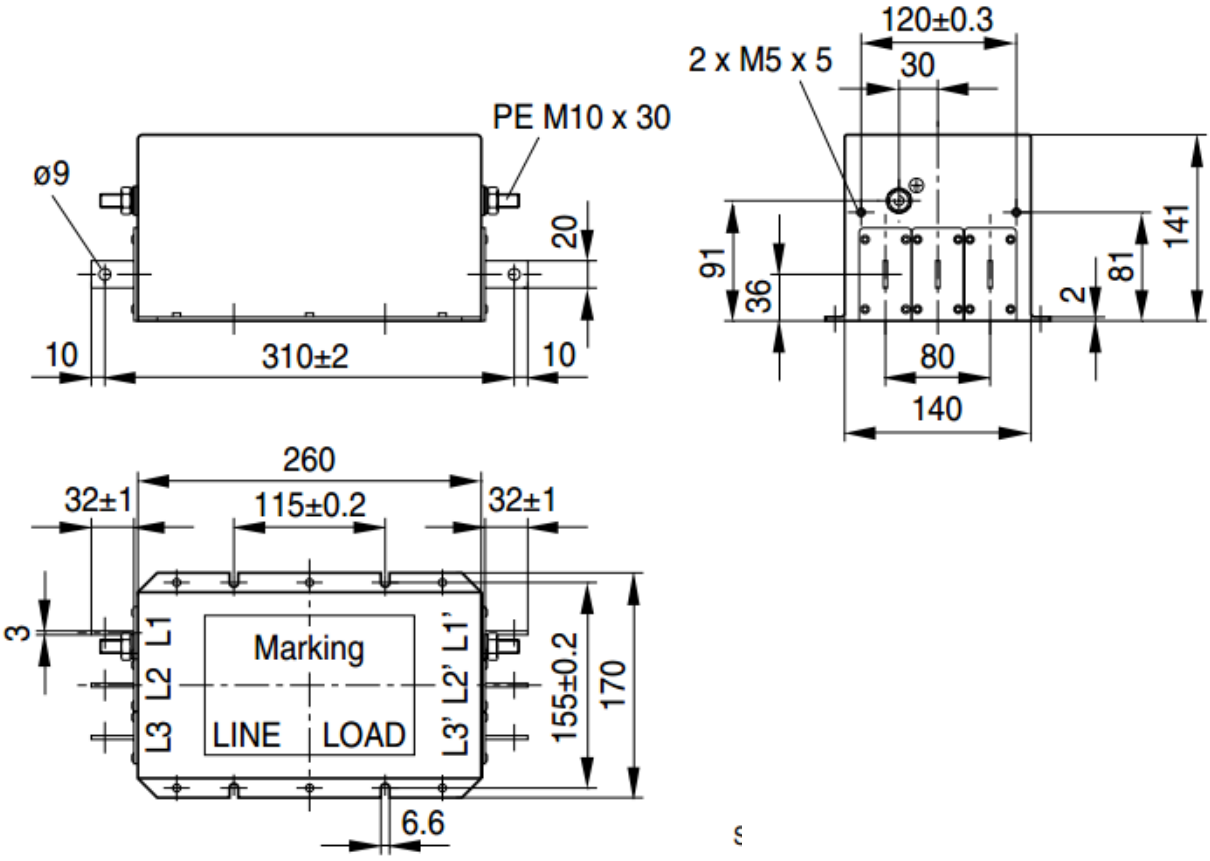

Model: B84143B0250S021

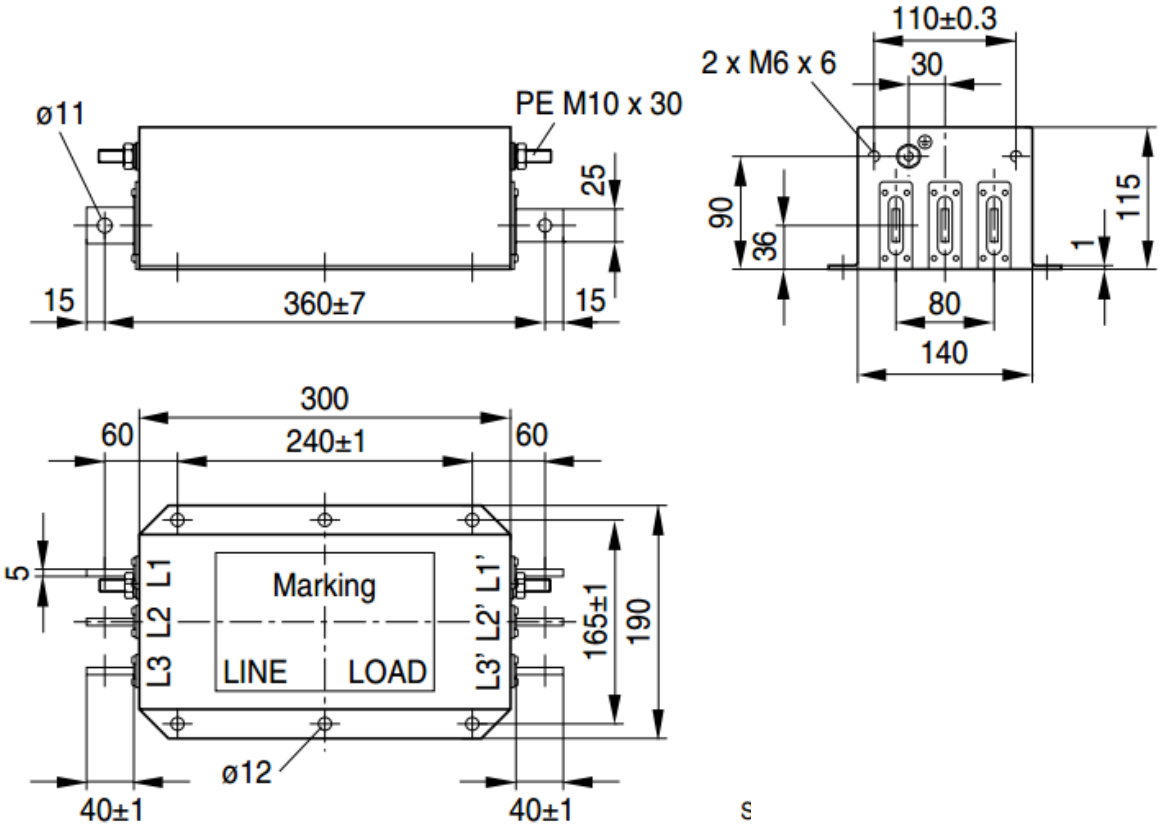

Unit: mm

Model: B84143B0400S021

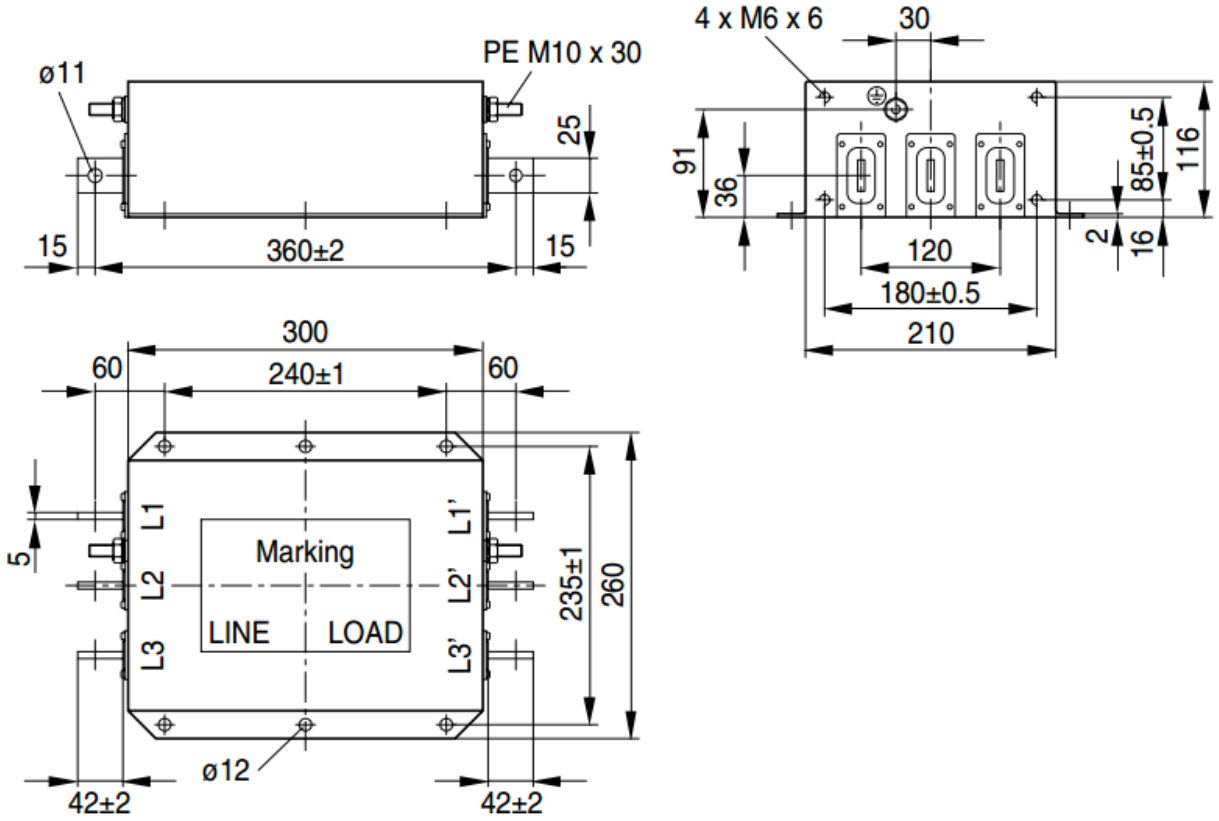

Model: B84143B1000S021

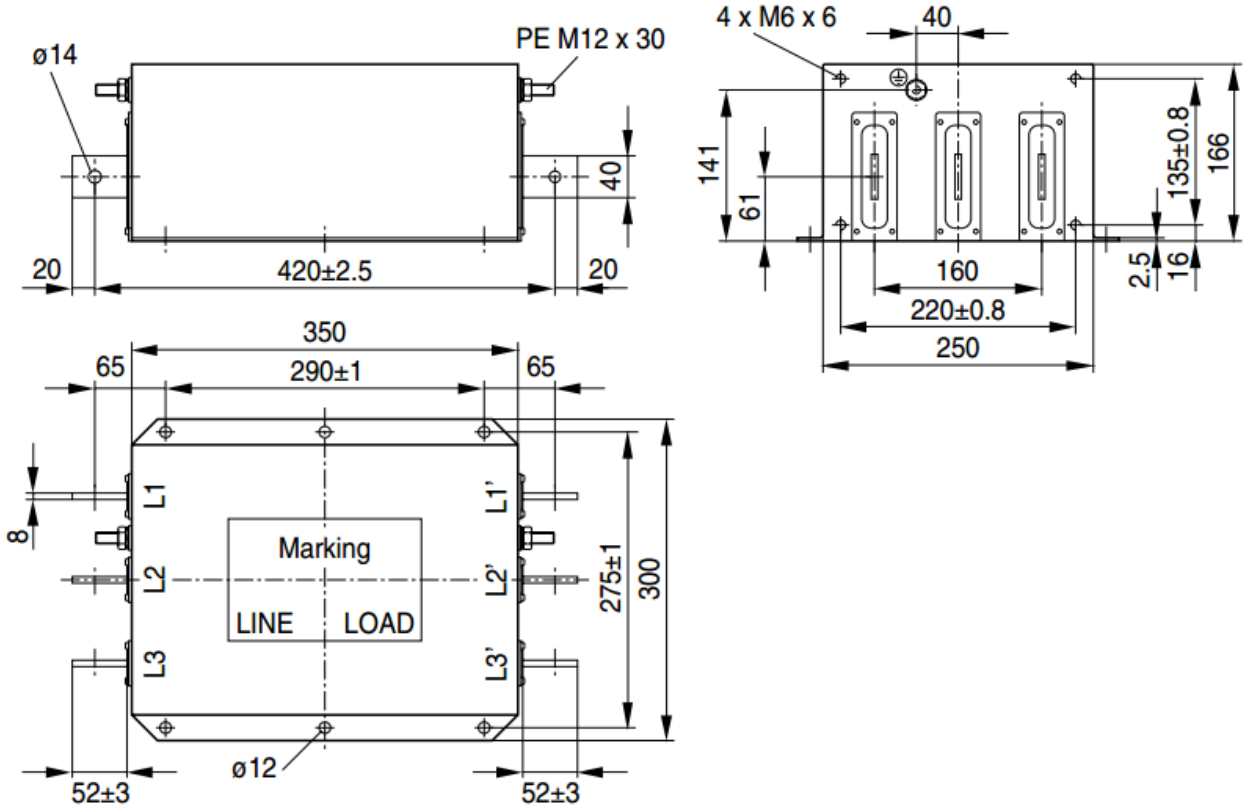

Unit: mm

EMC Filter Installation

All electrical equipment, including AC motor drives, will generate high-frequency/low-frequency noise and will interfere with peripheral equipment by radiation or conduction when in operation. By using an EMC filter with correct installation, much interference can be eliminated. It is recommended to use DELTA EMC filter to have the best interference elimination performance.

We assure that it can comply with following rules when AC motor drive and EMC filter are installed and wired according to user manual:

- EN61000-6-4
- EN61800-3: 1996
- EN55011 (1991) Class A Group 1

General precaution

To ensure EMC filter can maximize the effect of suppressing the interference of AC motor drive, the installation and wiring of AC motor drive should follow the user manual. In addition, be sure to observe the following precautions:

- EMC filter and AC motor drive should be installed on the same metal plate.
- Please install AC motor drive on footprint EMC filter or install EMC filter as close as possible to the AC motor drive.
- Please wire as short as possible.
- Metal plate should be grounded.
- The cover of EMC filter and AC motor drive or grounding should be fixed on the metal plate and the contact area should be as large as possible.

Choose suitable motor cable and precautions

Improper installation and choice of motor cable will affect the performance of EMC filter. Be sure to observe the following precautions when selecting motor cable.

- Use the cable with shielding (double shielding is the best).
- The shielding on both ends of the motor cable should be grounded with the minimum length and maximum contact area.
- Remove any paint on metal saddle for good ground contact with the plate and shielding.
- The connection of the cable with shielding and the metal plate must be correct, use saddle and metal plate to fix the shielding on both ends of the motor cable. Please refer to Figure 2 for correct connection.

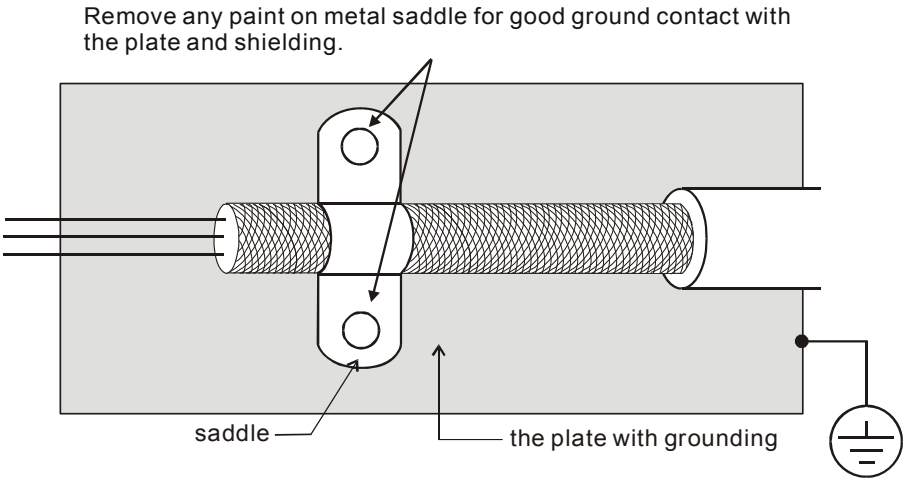

Figure 1

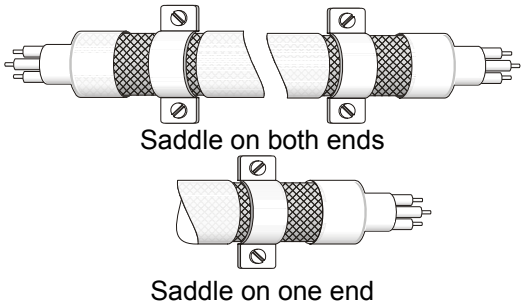

Figure 2

7-7 Digital Keypad

7-7-1 KPC-CE01

A: LED Display

Display frequency, current, voltage and error etc.

B: Status Indicator

F: Frequency Command
H: Output Frequency
U: User Defined Units
ERR: CAN Error Indicator
RUN: CAN Run Indicator

C: Function

(Refer to the chart follows for detail description)

Descriptions of Keypad Functions

Key	Descriptions
RUN	Start Operation Key 1. It is only valid when the source of operation command is from the keypad. 2. It can operate the AC motor drive by the function setting and the RUN LED will be ON. 3. It can be pressed again and again at stop process.
STOP RESET	Stop Command Key. This key has the highest processing priority in any situation. 1. When it receives STOP command, no matter the AC motor drive is in operation or stop status, the AC motor drive needs to execute “STOP” command. 2. The RESET key can be used to reset the drive after the fault occurs. 3. The reasons why the error cannot be reset: a. Because the condition which triggers the fault is not cleared. When the condition is cleared, the fault can be reset b. Because it’s the fault status checking when power-on. When the condition is cleared, repower again, and the fault can be reset
FWD REV	Operation Direction Key 1. This key is only control the operation direction NOT for activate the drive. FWD: forward, REV: reverse. 2. Refer to the LED descriptions for more details.
ENTER	ENTER Key Press ENTER and go to the next level. If it is the last level then press ENTER to execute the command.
ESC	ESC Key ESC key function is to leave current menu and return to the last menu. It is also functioned as a return key or cancel key in the sub-menu.
MENU	Press menu to return to main menu. Menu content: KPC-CE01 does not support function 5 ~13. 1. Parameter setup 2. Copy Parameter 3. Keypad Locked 4. PLC Function 5. Copy PLC 6. Fault Record 7. Quick start 8. Display Setup 9. Time Setup 10. Language Setup 11. Startup Menu 12. Main Page 13. PC Link

Key	Descriptions
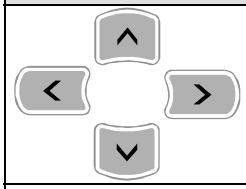	1. Direction: Left / Right / Up / Down 2. In the numeric value setting mode, it is used to move the cursor and change the numeric value. 3. In the menu/text selection mode, it is used for item selection.
	Function Key 1. The functions keys have factory settings and can be defined by users. The factory settings of F1 and F4 work with the function list below. For example, F1 is JOG function, F4 is a speed setting key for adding/deleting user defined parameters. 2. Other functions must be defined by TPEditor first (please use version 1.40 or above). TPEditor software can be downloaded at: http://www.deltaww.com/services/DownloadCenter2.aspx?secID=8&pid=2&tid=0&CID=06&itemID=060302&typeID=1&downloadID=,&title=--Select Product Series --&dataType=8;&check=1&hl=en-US Please refer to instruction for TPEditor in Chapter 10-3.
	1. This key is executed by the parameter settings of the source of Hand frequency and hand operation. The factory settings of both source of Hand frequency and hand operation are the digital keypad. 2. Press HAND ON key at stop status, the setting will switch to hand frequency source and hand operation source. Press HAND ON key at operation status, it stops the AC motor drive first (display AHSP warning), and switch to hand frequency source and hand operation source. 3. Successful mode switching for KPC-CE01, “HAND” LED will be on; for KPC-CC01, it will display HAND mode on the screen.
	1. This key is executed by the parameter settings of the source of AUTO frequency and AUTO operation. The factory setting is the external terminal (source of operation is 4-20mA). 2. Press Auto key at stop status, the setting will switch to hand frequency source and hand operation source. Press Auto key at operation status, it stops the AC motor drive first (display AHSP warning), and switch to auto frequency source and auto operation source. 3. Successful mode switching for KPC-CE01, “AUTO” LED will be on; for KPC-CC01, it will display AUTO mode on the screen

Descriptions of LED Functions

LED	Descriptions
	Steady ON: operation indicator of the AC motor drive, including DC brake, zero speed, standby, restart after fault and speed search. Blinking: drive is decelerating to stop or in the status of base block. Steady OFF: drive doesn’t execute the operation command
	Steady ON: stop indicator of the AC motor drive. Blinking: drive is in the standby status. Steady OFF: drive doesn’t execute “STOP” command.
	Operation Direction LED 1. Green light is on: the drive is running forward. 2. Red light is on: the drive is running backward. 3. Twinkling light: the drive is changing direction. Operation Direction LED in torque mode 1. Green light is on: torque command ≥ 0, the motor is running forward. 2. Red light is on: torque command < 0, the motor is running backward. 3. Twinkling light: torque command < 0, the motor is running forward.
	(Only KPC-CE01 support this function) Steady On: In HAND/LOC mode Steady Off: In AUTO/REM mode
	(Only KPC-CE01Support this function) Steady On: In AUTO/REM mode Steady Off: In HAND/LOC mode

CANopen ~"RUN"

RUN LED:

LED status	Condition/State
OFF	CANopen at initial No LED
Blinking	CANopen at pre-operation 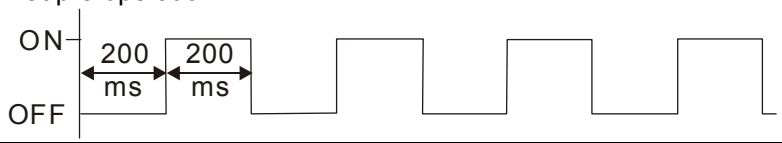
Single flash	CANopen at stopped 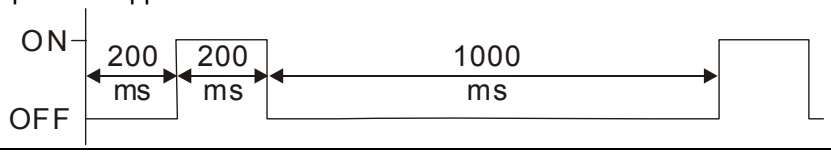
ON	CANopen at operation status No LED

CANopen ~"ERR"

ERR LED:

LED status	Condition/ State
OFF	No Error
Single flash	One message fail 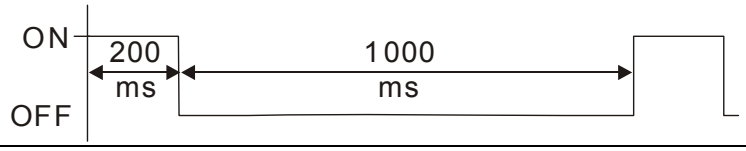
Double flash	Guarding fail or heartbeat fail 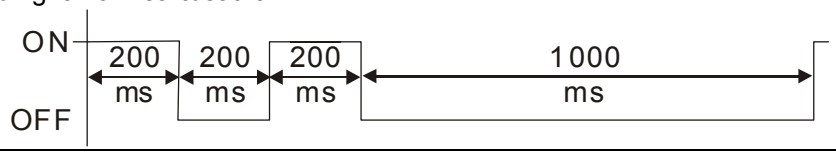
Triple flash	SYNC fail 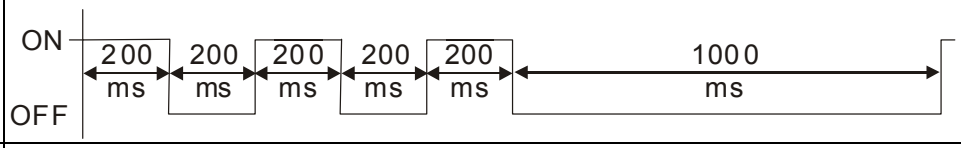
ON	Bus off

7-7-2 Dimension

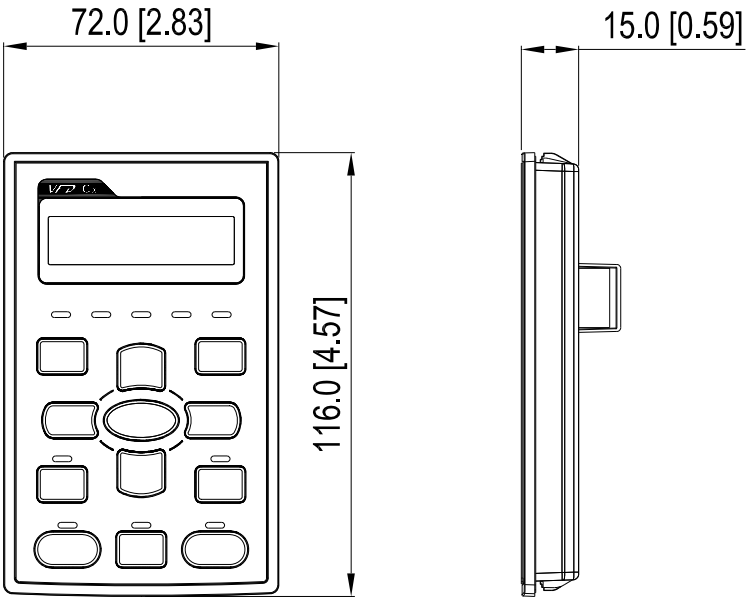

7-7-3 RJ45 Extension Lead for Digital Keypad

Part #	Description
CBC-K3FT	3 feet RJ45 extension lead (approximately 0.9m)
CBC-K5FT	5 feet RJ45 extension lead (approximately 1.5 m)
CBC-K7FT	7 feet RJ45 extension lead (approximately 2.1 m)
CBC-K10FT	10 feet RJ45 extension lead (approximately 3 m)
CBC-K16FT	16 feet RJ45 extension lead (approximately 4.9 m)

7-8 Panel Mounting (MKC-KPPK)

For MKC-KPPK model, user can choose wall mounting or embedded mounting, protection level is IP66.

Applicable to the digital keypads (KPC-CC01 & KPC-CE01).

<table>
<tr><th>Wall Mounting</th><th>Embedded Mounting</th></tr>
<tr><td>Accessories*1
 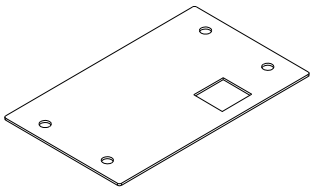
Screw *4 ~M4*p 0.7 *L8mm
Torque: 10-12kg-cm (8.7-10.4lb-in.) [0.98~1.18 Nm]</td><td>Accessories*2
 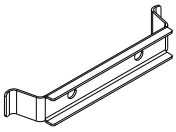
Screw *4 ~M4*p 0.7 *L8mm
Torque: 10-12kg-cm (8.7-10.4lb-in.) [0.98~1.18 Nm]</td></tr>
<tr><td>Panel cutout dimension Unit: mm [inch]
 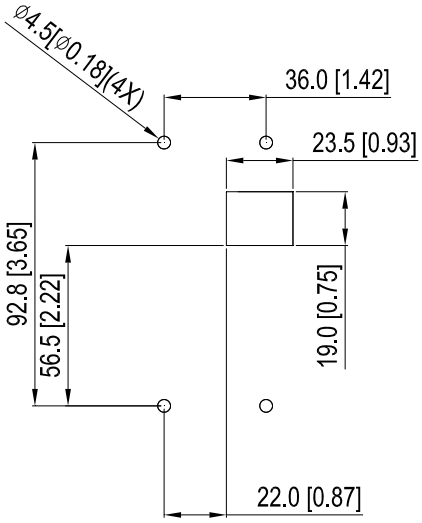
</td><td>Panel cutout dimension Unit: mm [inch]
 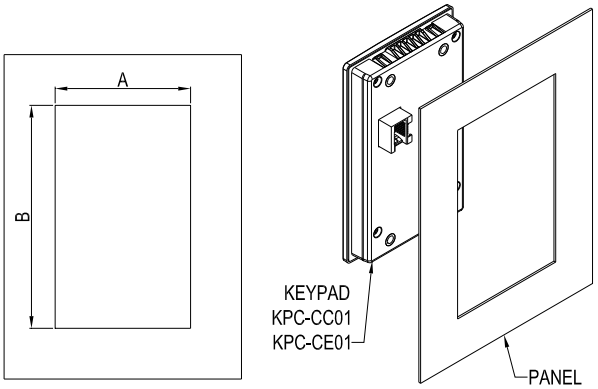

Normal cutout dimension
<table>
<tr><td>Panel thickness</td><td>1.2mm</td><td>1.6mm</td><td>2.0mm</td></tr>
<tr><td>A</td><td colspan="3">66.4 [2.614]</td></tr>
<tr><td>B</td><td>110.2 [4.339]</td><td>111.3 [4.382]</td><td>112.5 [4.429]</td></tr>
</table>
*Deviation: ±0.15mm /±0.0059inch
Cutout dimension (Waterproof level: IP66)
<table>
<tr><td>Panel thickness</td><td>1.2mm</td><td>1.6mm</td><td>2.0mm</td></tr>
<tr><td>A</td><td colspan="3">66.4 [2.614]</td></tr>
<tr><td>B</td><td colspan="3">110.8 [4.362]</td></tr>
</table>
*Deviation: ±0.15mm /±0.0059inch</td></tr>
</table>

Wall Mounting	Embedded Mounting
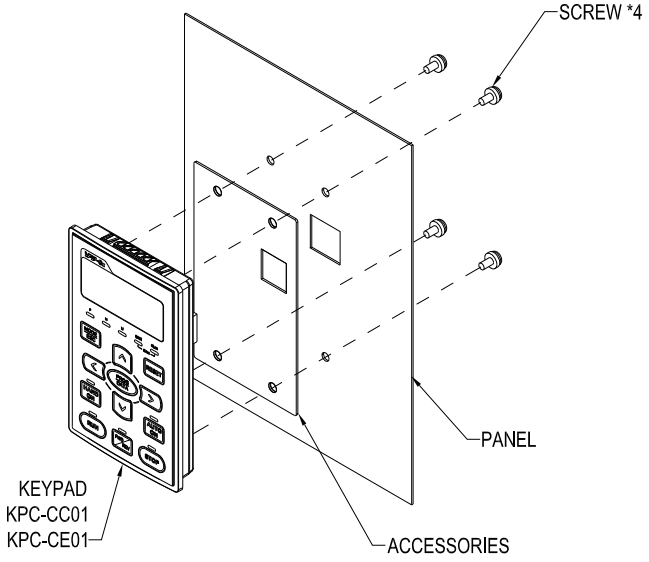	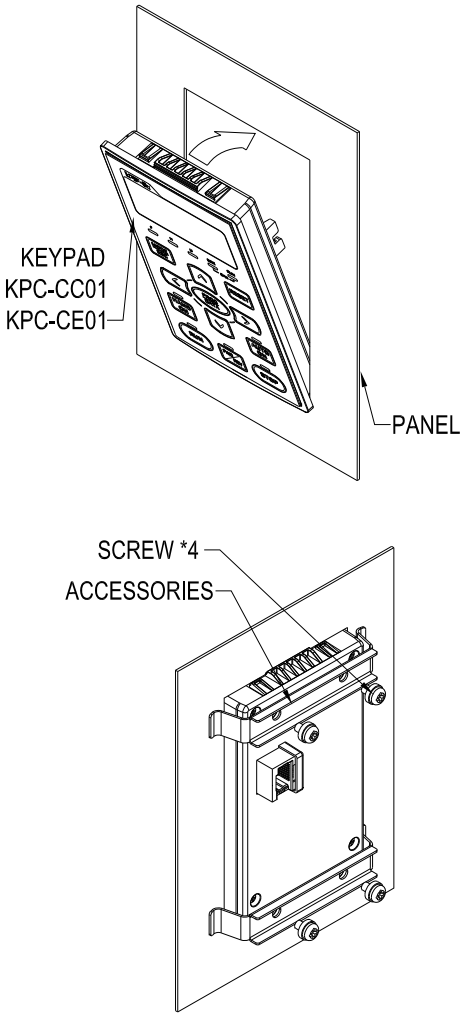

7-9 Conduit Box Kit

■ Appearance

Frame D

Applicable models

VFD450C63B-00; VFD550C63B-00
VFD450C63B-21; VFD550C63B-21

Model number『MKC-DN1CB』

ITEM	Description	Qty.
1	Screw M5*0.8*10L	4
2	Bushing Rubber 28	2
3	Bushing Rubber 44	2
	Bushing Rubber 88	2
5	Conduit box cover	1
6	Con uit box base	1

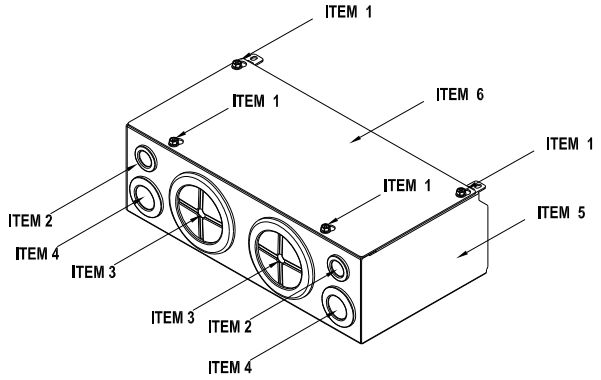

Frame E

Applicable models

VFD750C63B-00; VFD900C63B-00; VFD1100C63B-00;
VFD1320C63B-00;
VFD750C63B-21; VFD900C63B-21; VFD1100C63B-21;
VFD1320C63B-21

Model number『MKC-EN1CB』

ITEM	Description	Qty.
1	Screw M5 0.8*10L	6
	Bushing Rubber 28	2
3	Bushing Rubber 44	4
4	Bushing Rubber 100	2
5	Cond it box cover	1
6	Conduit box base	1

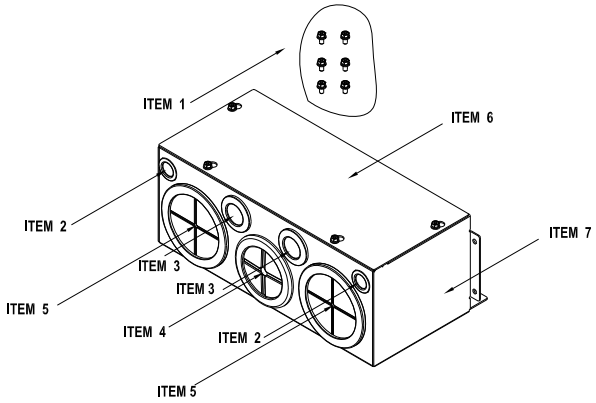

Frame F

Applicable models

VFD1600C63B-00; VFD2000C63B-00;
VFD1600C63B-21; VFD2000C63B-21

Model number『MKC-FN1CB』

ITEM	Description	Qty.
1	Screw M5*0.8*10L	8
2	Bushing Ruber28	2
3	Bushing Rubber 44	4
4	Bushing Rubbe 100	2
5	Conduit ox ov r	1
6	Conduit box base	1

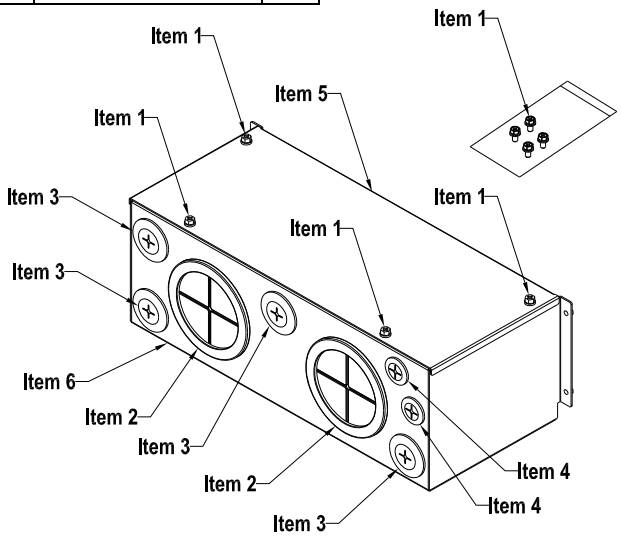

Frame G

Applicable models

VFD2500C63B-00; VFD3150C63B-00;
VFD2500C63B-21; VFD3150C63B-21

Model number『MKC-GN1CB』

ITEM	Description	Qty.
1	Screw M5*0.8*10L	12
2	Bushing Rubber 28	2
3	Bushing Rubber 44	2
4	Bushing Rubber 130	3
5	Conduit box cover	1
6	Conduit box base	1

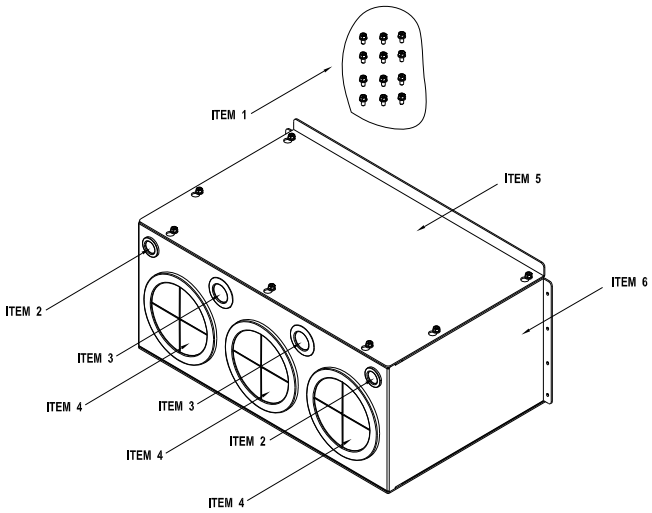

■ Conduit Box Installation

Frame D

1. Loosen the cover screws and press the tabs on each side of the cover to remove the cover, as shown in the following figure. Screw torque: 12~15kg-cm [10.4~13 lb-in] [1.18~1.47 Nm]

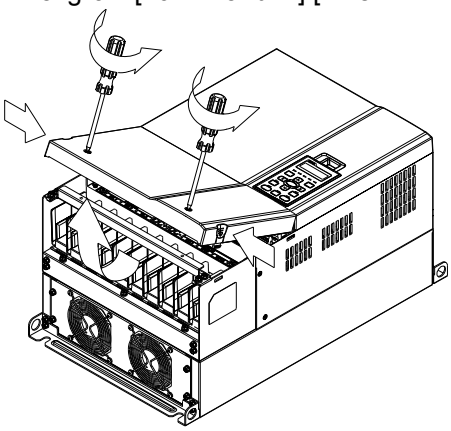

2. Remove the 5 screws shown in the following figure. Screw torque:24~26kg-cm [20.8~22.6lb-in] [2.35~2.55 Nm]

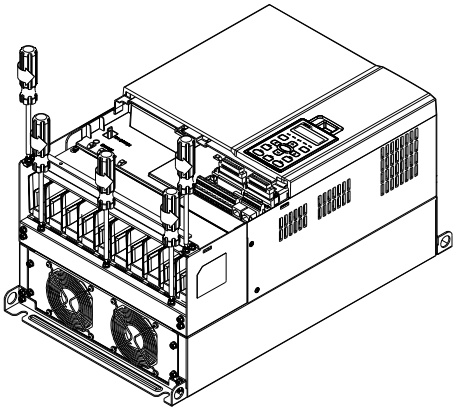

3. Install the conduit box by fasten the 5 screws shown in the following figure.
   Screw torque:24~26kg-cm [20.8~22.6lb-in] [2.35~2.55 Nm]

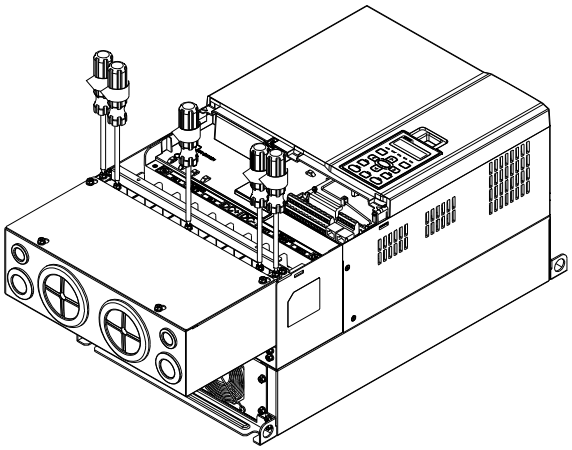

4. Fasten the 2 screws shown in the following figure. Screw torque: 12~15kg-cm [10.4~13 lb-in] [1.18~1.47 Nm]

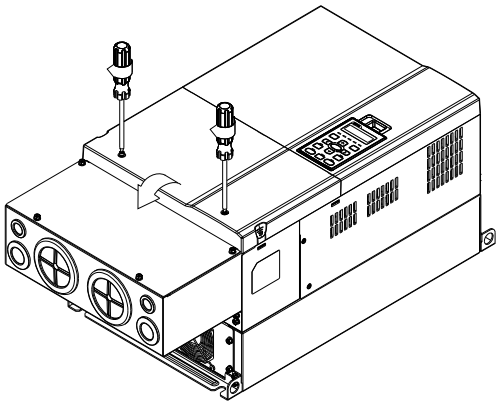

Frame E

1. Loosen the 4 cover screws and lift the cover; Screw torque: 12~ 15 kg-cm [10.4~13lb-in] [1.18~1.47 Nm].

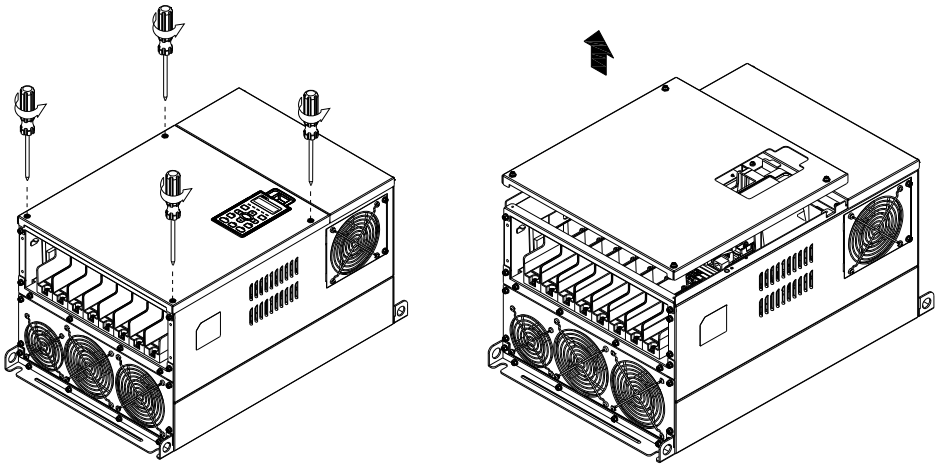

2. Fasten the 6 screws shown in the following figure and place the cover back to the original position. Screw torque: 24~26kg-cm [20.8~22.6lb-in] [2.35~2.55 Nm].

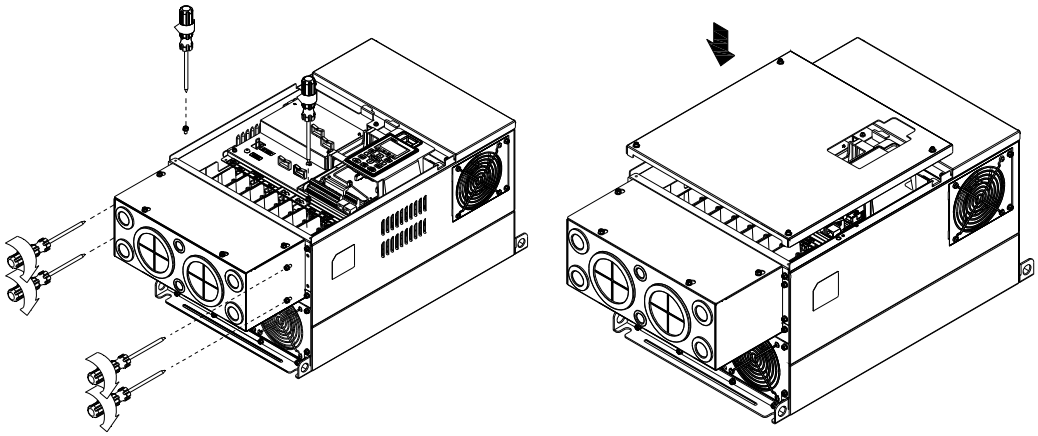

3. Fasten the 4 screws shown in the following figure. Screw torque:12~15kg-cm [10.4~13lb-in] [1.18~1.47 Nm]

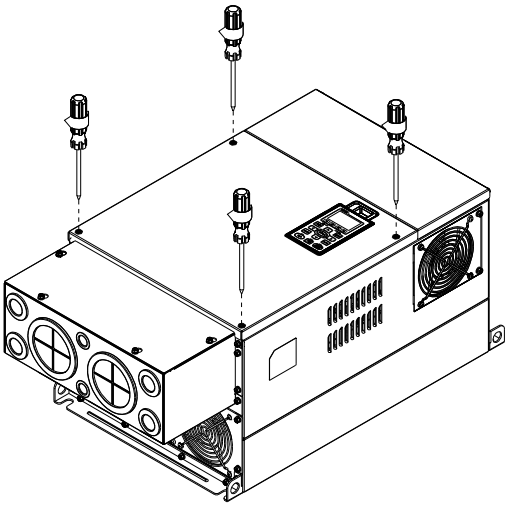

Frame F

1. Loosen the cover screws and press the tabs on each side of the cover to remove the cover, as shown in the following figure. Screw torque: 12~15kg-cm [10.4~13 Ib-in] [1.18~1.47 Nm].

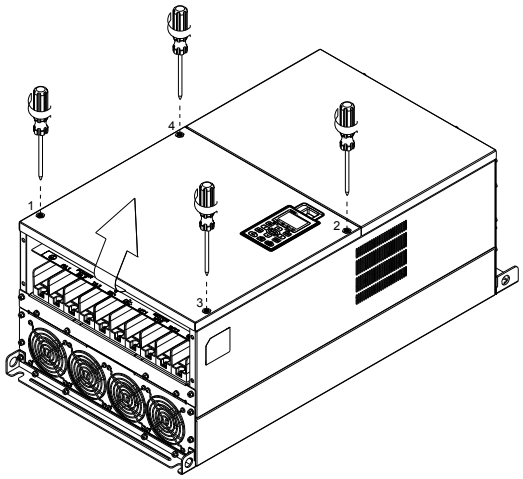

2. Install the conduit box by fastens the 4 screws, as shown in the following figure.
   Screw torque: 24~26kg-cm [20.8~22.6Ib-in] [2.35~2.55 Nm].

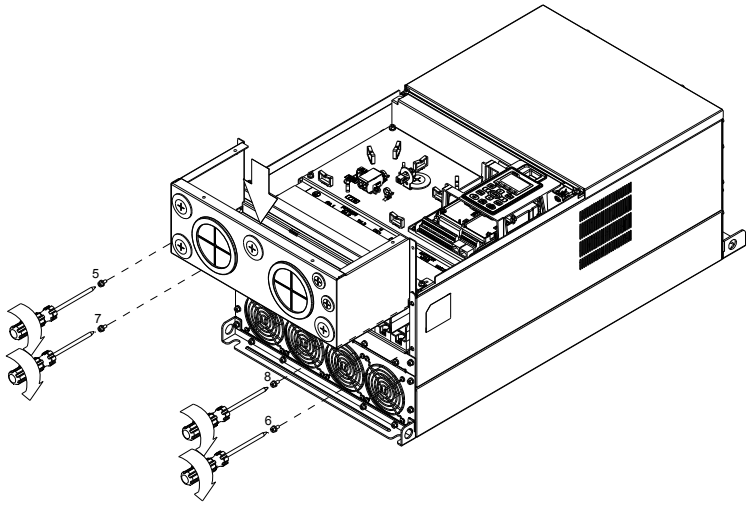

3. Install the conduit box by fasten all the screws shown in the following figure
   Screw 9~12 torque: 12~15kg-cm [10.4~13.6Ib-in] [1.18~1.47 Nm]
   Screw 13~16 torque: 24~26kg-cm [20.8~22.6Ib-in] [2.35~2.55 Nm]

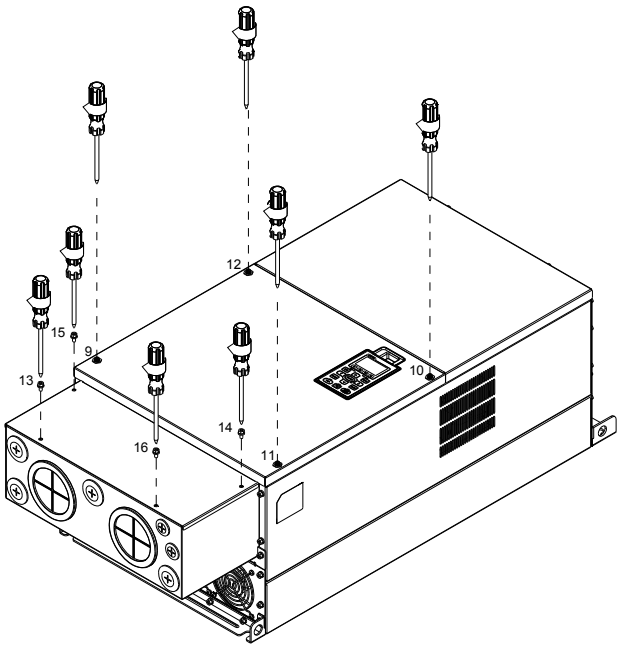

Frame G

1. On the conduit box, loosen 7 of the cover screws and remove the cover. Screw torque: 24~26kg-cm [20.8~22.6lb-in][2.35~2.55Nm].
2. On the drive, loosen 4 of the cover screws and press the tabs on each side of the cover to remove the cover, as shown in the following figure. Screw torque: 12~15kg-cm [10.4~13lb-in][1.18~1.47Nm].

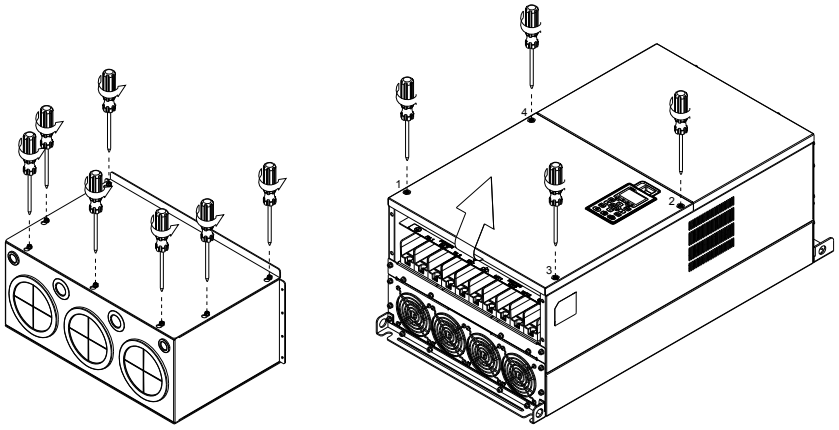

3. Remove the top cover and loosen the screws.
   M5 Screw torque: 24~26kg-cm [20.8~22.6lb-in][2.35~2.55Nm]
   M8 Screw torque: 100~120kg-cm [86.7~104.1lb-in][9.8~11.76Nm]

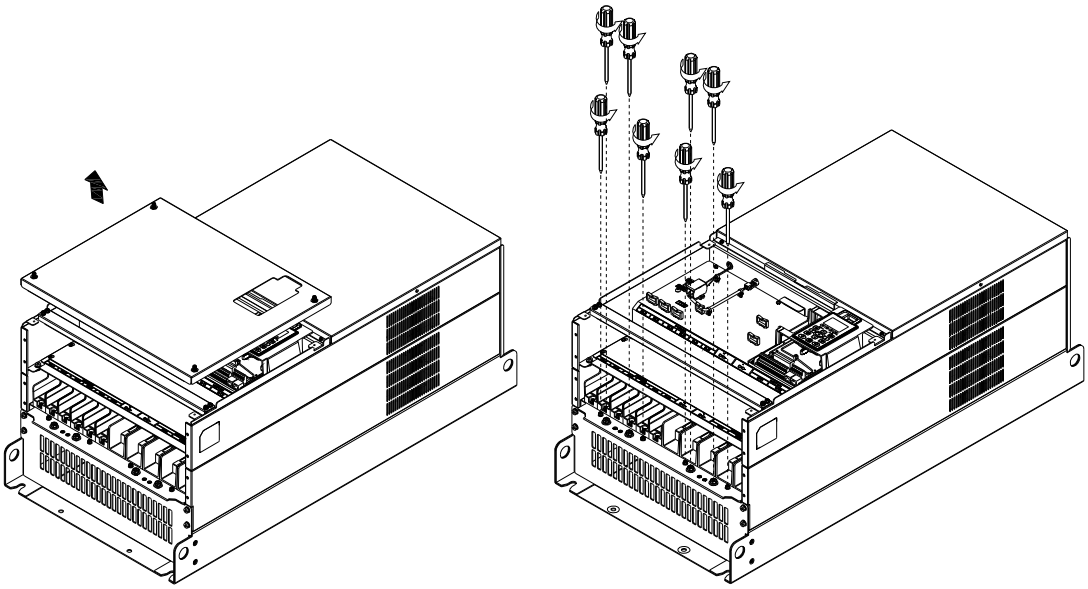

4. Install the conduit box by fastening all the screws shown in the following figure.
   M5 Screw torque: 24~26kg-cm [20.8~22.6lb-in][2.35~2.55Nm]
   M8 Screw torque: 100~120kg-cm [86.7~104.1lb-in][9.8~11.76Nm]

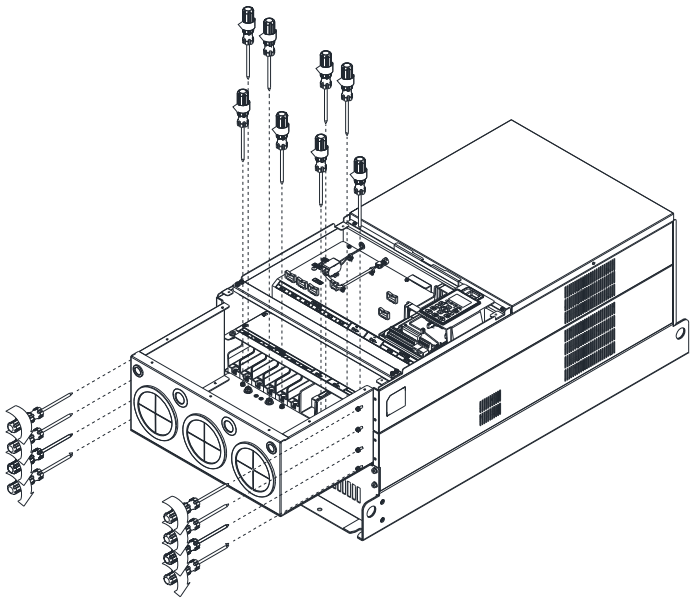

5. Fasten all the screws. Screw torque: 24~26kg-cm [20.8~22.6lb-in] [2.35~2.55Nm].

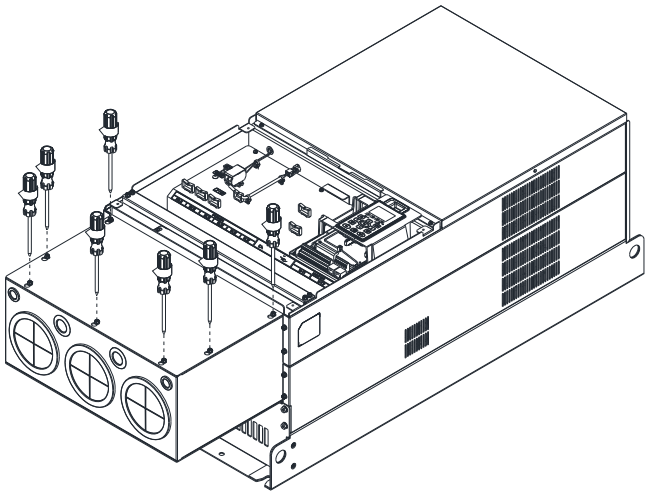

6. Place the cover back to the top and fasten the screws (as shown in the figure).
   Screw torque: 12~15kg-cm [10.4~13lb-in] [1.18~1.47Nm].

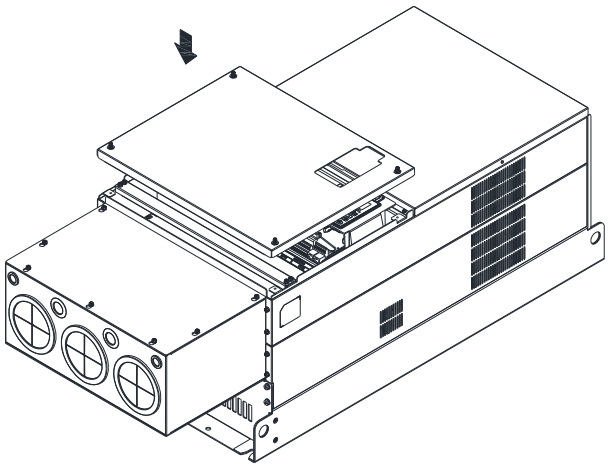

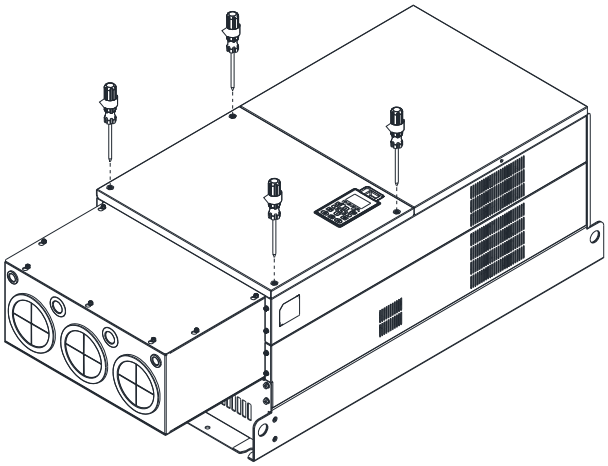

7-10 Fan Kit

■ Frames of the fan kit

Frame A Applicable Model VFD015C53A-21,VFD022C53A-21, VFD037C53A-21	Heat sink Fan Model [MKC-AFKM] 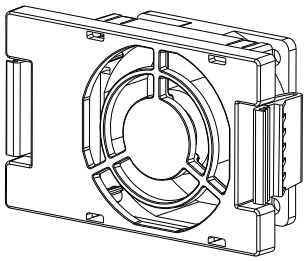	
Frame B Applicable Model VFD055C53A-21,VFD075C53A-21,VFD110C53A-21, VFD150C53A-21	Heat sink Fan Model [MKC-BFKM1] 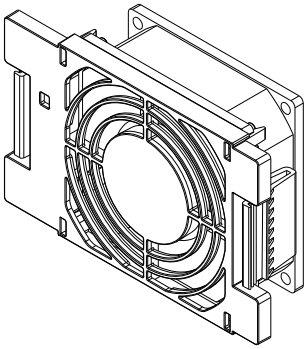	Capacitor Fan Model [MKC-BFKB] 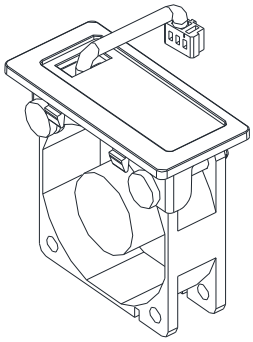
Frame C Applicable Model VFD185C63B-21; VFD220C63B-21; VFD300C63B-21; VFD370C63B-21	Heat Sink Fan Model [MKC-CFKM1] 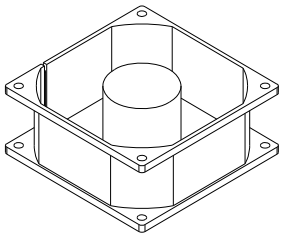	Capacitor Fan Model [MKC-CFKB3] 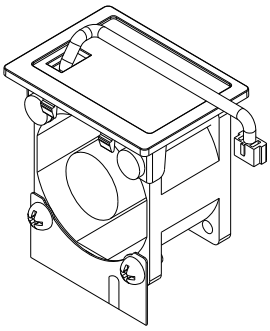
Frame D Applicable Model VFD450C63B-00; VFD550C63B-00; VFD450C63B-21; VFD550C63B-21	Heat Sink Fan Model [MKC-DFKM] 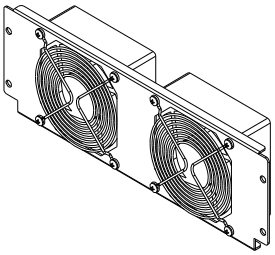	Capacitor Fan Model [MKC-DFKB] 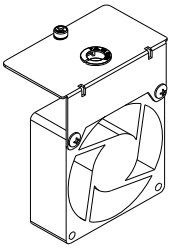

Frame E

Heat Sink Fan Model [MKC-EFKM3]

Applicable Model

VFD750C63B-00; VFD900C63B-00; VFD1100C63B-00;
VFD1320C63B-00;
VFD750C63B-21;VFD900C63B-21; VFD1100C63B-21;
VFD1320C63B-21

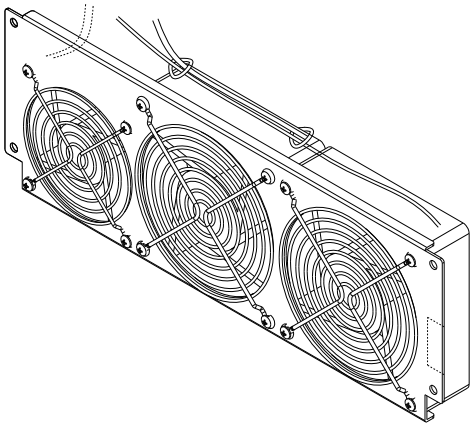

Frame E

Heat Sink Fan Model [MKC-EFKB]

Applicable Model

VFD900C63B-00; VFD1100C63B-00; VFD1320C63B-00;
VFD900C63B-21; VFD1100C63B-21; VFD1320C63B-21

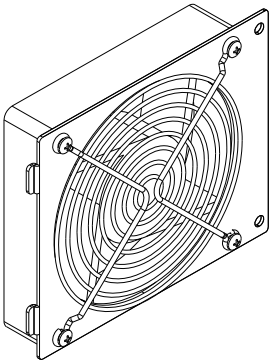

Frame F

Capacitor Fan Model [MKC-FFKB]

Applicable Model

VFD1600C63B-00; VFD2000C63B-00;
VFD1600C63B-21; VFD2000C63B-21

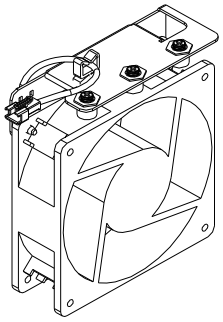

Frame F

Heat Sink Fan Model [MKC-FFKM]

Applicable Model

VFD1600C63B-00; VFD2000C63B-00;
VFD1600C63B-21; VFD2000C63B-21

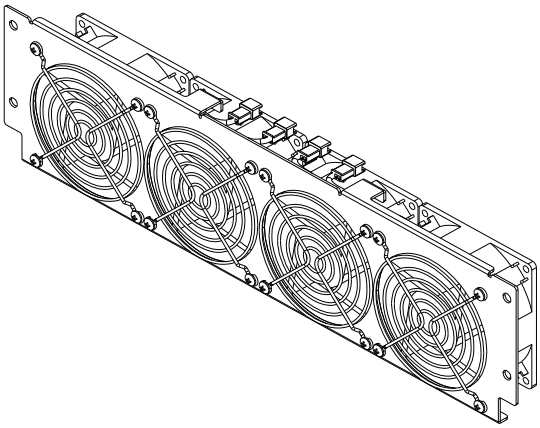

Frame G Applicable Model VFD2500C63B-00; VFD3150C63B-00; VFD2500C63B-21; VFD3150C63B-21	Heat Sink Fan Model [MKC-GFKM] 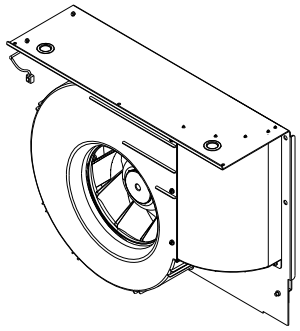
Frame H Applicable Model VFD4000C63B-00; VFD4500C63B-00; VFD5600C63B-00; ; VFD6300C63B-00; VFD4000C63B-21; VFD4500C63B-21; VFD5600C63B-21; VFD6300C63B-21	Heat Sink Fan Model [MKC-HFKM1] 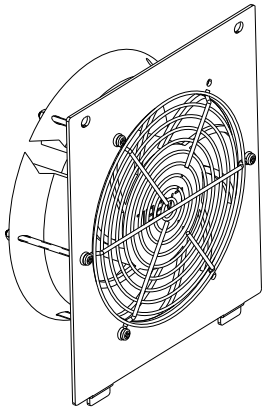

■ Fan Removal

Frame A

Model『MKC-AFKM』: Heat Sink Fan

Applicable model

VFD015C53A-21, VFD022C53A-21, VFD037C53A-21

1. Refer to Figure 1, press the tabs on both side of the fan to successfully remove the fan.

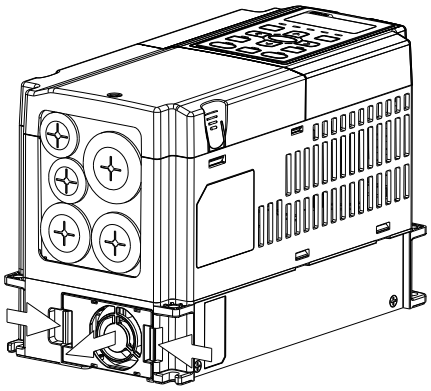

Figure 1

2. Disconnect the power terminal before removing the fan. (As shown below.)

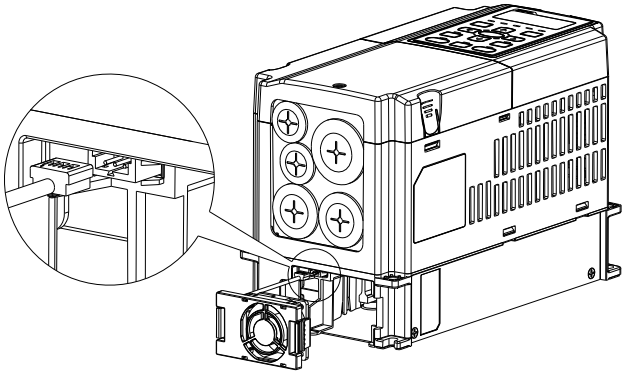

Figure 2

Frame B

Model『MKC-BFKM1』Heat Sink Fan

Applicable model

VFD055C53A-21, VFD075C53A-21, VFD110C53A-21, VFD150C53A-21

1. Refer to Figure 1, press the tab on both side of the fan to successfully remove the fan.

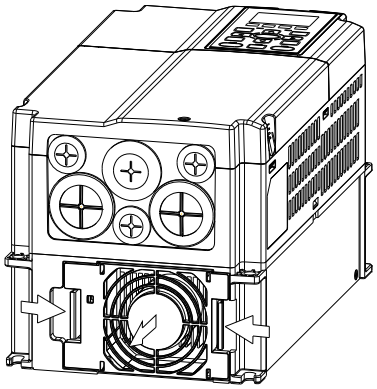

Figure 1

2. Disconnect the power terminal before removing the fan. (As shown below.)

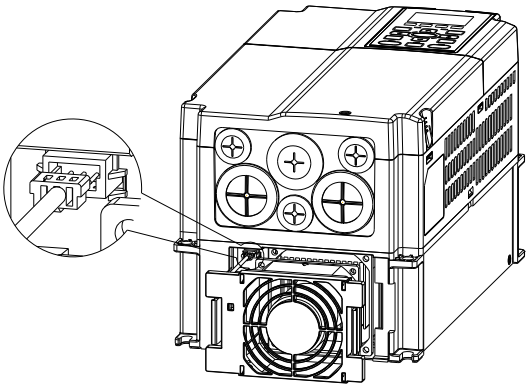

Figure 2

Frame B

Model『MKC-BFKB』Capacitor Fan

Applicable model
VFD055C53A-21,VFD075C53A-21,VFD110C53A-21,VFD150C53A-21

Disconnect fan power and pull out the fan by using flathead screwdriver. (As shown in the larger picture)

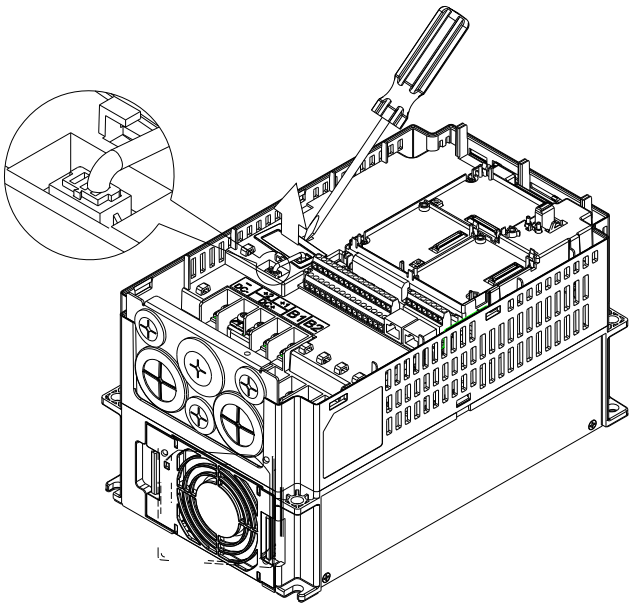

Frame C

Model『MKC-CFKM』Heat Sink Fan

Applicable model
Single fan kit applicable models (only fan kit 1 is required to be installed):
VFD185C63B-21; VFD220C63B-21; VFD300C63B-21; VFD370C63B-21

1. (As shown Figure 1) Before removing the fan, remove the cover by using a slotted screwdriver.

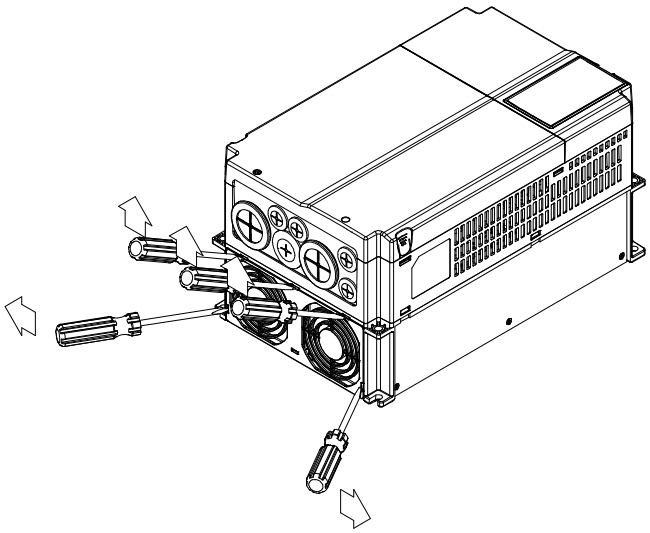

Figure 1

2. (As shown in Figure 2), remove the power connector, loosen the screw and remove the fan kit. When installing the fan kit, have the label on the fan kit facing inside of the motor drive.
   Screw's torque force: 10~12kgf-cm [8.7~10.4lb-in][0.98~1.18 Nm]

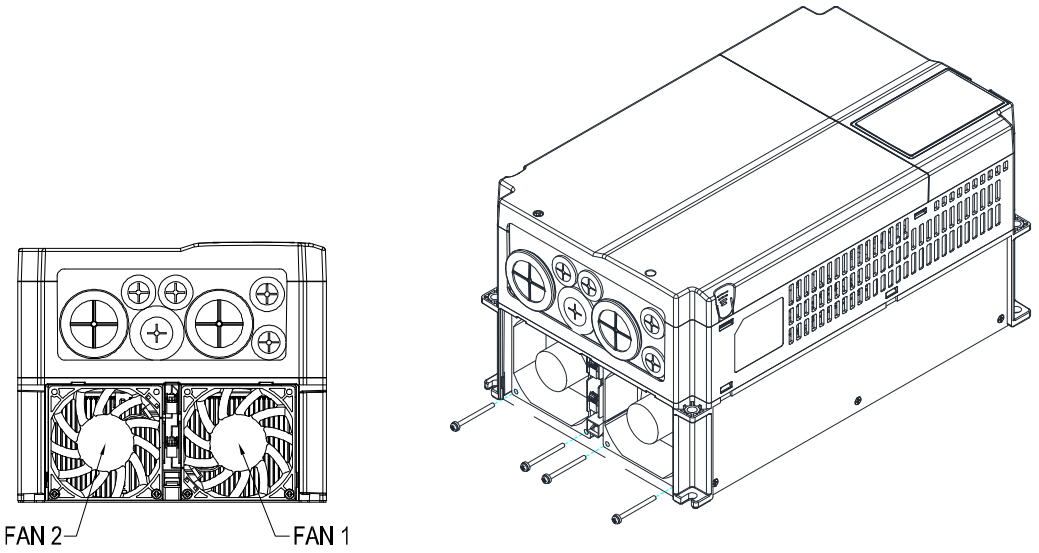

Figure 2

Frame C

Model『MKC-CFKB3』Capacitor Fan

Applicable model
VFD185C63B-21; VFD220C63B-21; VFD300C63B-21; VFD370C63B-21

When removing, unplug the power connector of the fan first, and then remove the cover of the fan by using a slotted screwdriver.
(As shown in partial enlarged view in Figure 1)

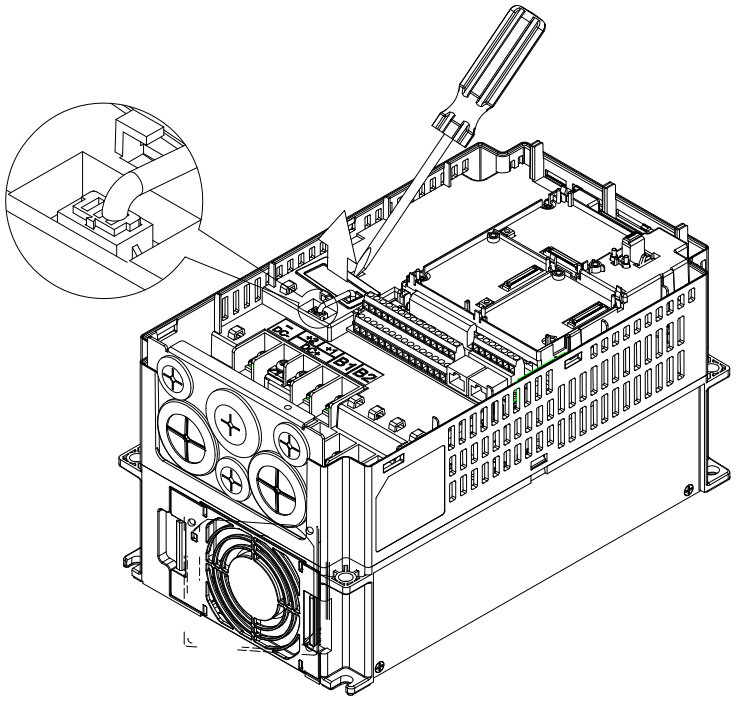

Figure 1

Frame D

Model 『MKC-DFKB』 Capacitor Fan

Applicable model
VFD450C63B-00; VFD550C63B-00; VFD450C63B-21; VFD550C63B-21

1. Loosen screw 1 and screw 2, press the on the right and the left to remove the cover, follow the direction the arrows indicate. Press on top of digital keypad to properly remove it.
   Screw 1, 2 Torque :12~15kgf-cm [10.4~13lb-in] [1.18~1.47 Nm]

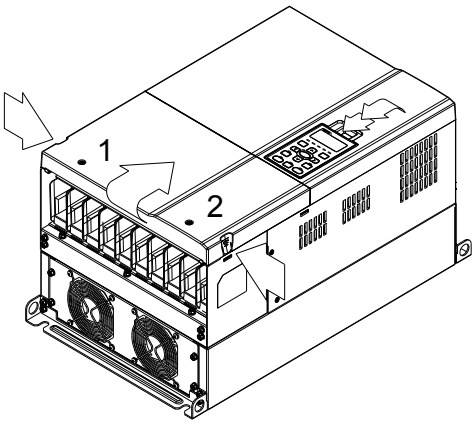

Figure 1

2. (Figure 2) Loosen screw 3, press the tab on the right and the left to remove the cover.
   Screw 3, 4 Torque : 6~8kgf-cm [5.2~6.9lb-in][0.59~0.78 Nm]

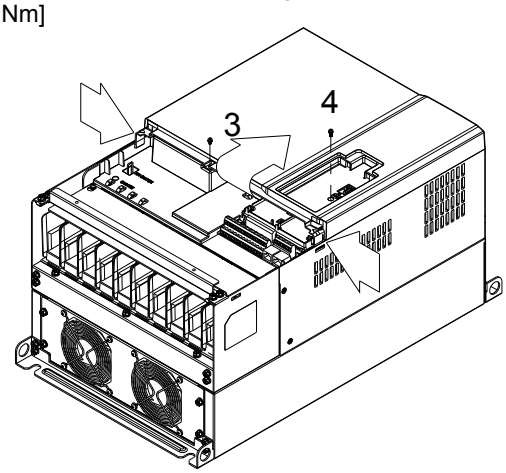

Figure 2

3. Loosen screw 5 (figure 3) and disconnect fan power and pull out the fan. (As shown in the enlarged picture 3)
   Screw 5 Torque :10~12kgf-cm [8.6~10.4lb-in][0.98~1.18 Nm]

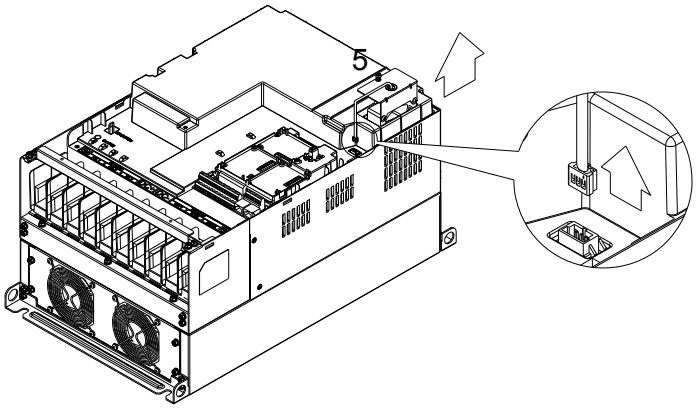

Figure 3

Frame D

Model『MKC-DFKM』Heat Sink Fan

Applicable model

VFD450C63B-00; VFD550C63B-00; VFD450C63B-21; VFD550C63B-21

1. Loosen the screw and remove the fan kit. Screw torque: 24~26kgf-cm [20.8~22.6lb-in][2.35~2.55 Nm]
2. (As shown Figure 1) Before removing the fan, remove the cover by using a slotted screwdriver.

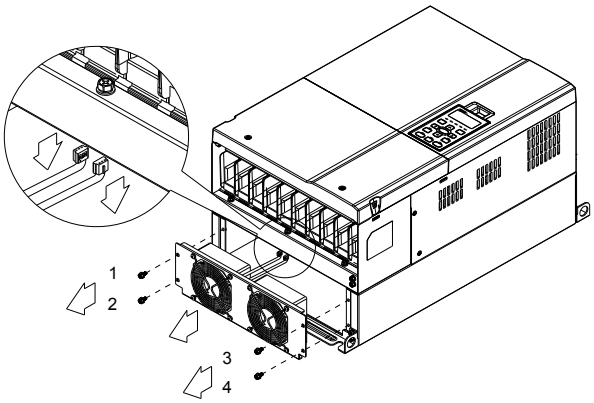

Figure 1

Frame E

Applicable model

VFD750C63B-00; VFD900C63B-00; VFD1100C63B-00; VFD1320C63B-00; VFD750C63B-21; VFD900C63B-21; VFD1100C63B-21; VFD1320C63B-21

Model『MKC-EFKM3』Heat Sink Fan

1. Loosen screw 1~4 (figure 2) and disconnect fan power and pull out the fan. (As shown in the enlarged picture 3)
Screw1~4 Torque : 24~26kgf-cm [20.8~22.6lb-in][2.35~2.55 Nm]

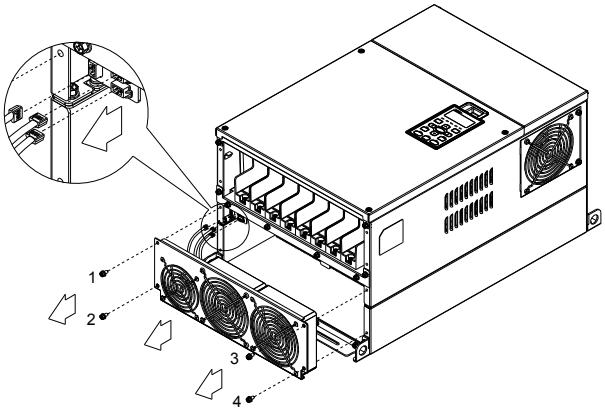

Figure 2

Model『MKC-EFKB』Capacitor Fan

1. Loosen screw 1~2 (figure 3) and disconnect fan power and pull out the fan. (As shown in the enlarged picture 3)
Screw1~2 Torque : 24~26kgf-cm [20.8~22.6lb-in] [2.35~2.55 Nm]

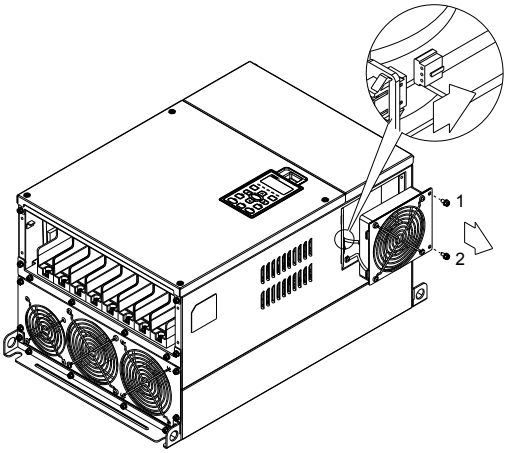

Figure 3

Frame F

Applicable model

VFD1600C63B-00; VFD2000C63B-00; VFD1600C63B-21; VFD2000C63B-21;

Fan model『MKC-FFKM』Heat Sink Fan

Loosen the screws and plug out the power of fan before removing (figure 1).
Screw torque: 12~15kg-cm [10.4~13lb-in][1.18~1.47 Nm]

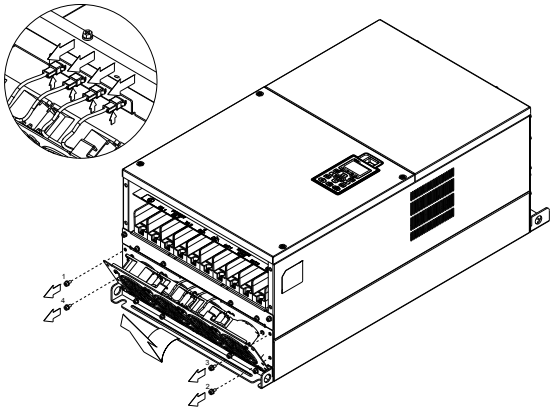

Figure 1

Fan model 『MKC-FFKB』Capacitor Fan

1. Loosen the screw (figure 1) and removes the cover.
   Screw torque: 14~16kg-cm [12.2~13.9lb-in][1.18~1.47 Nm].

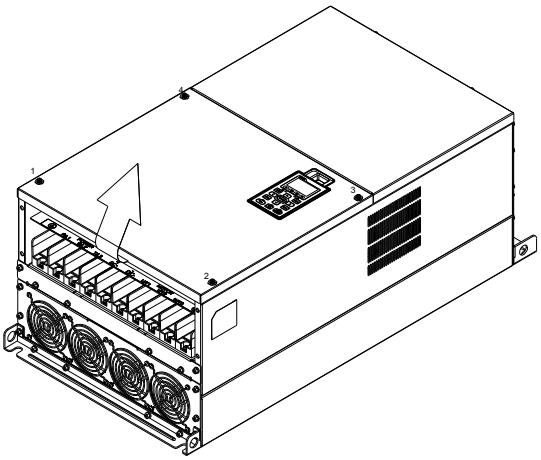

Figure 1

2. Loosen the screw (figure 2) and removes the cover. Screw torque: 24~26kg-cm [20.8~22.6lb-in][2.35~2.55 Nm].

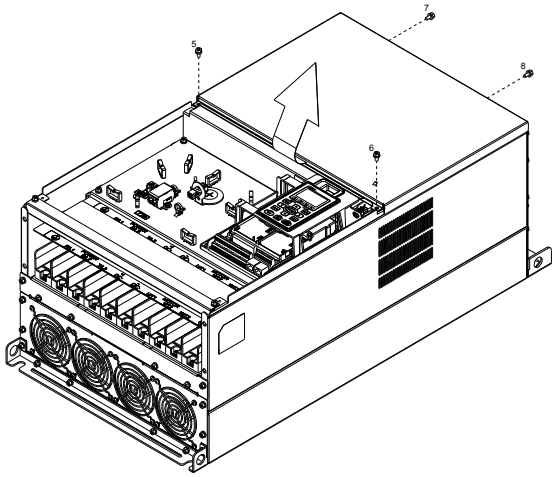

Figure 2

3. Loosen the screws and remove the fan. (figure 3 and figure 4) Screw torque: 24~26kg-cm [20.8~22.6lb-in][2.35~2.55 Nm].

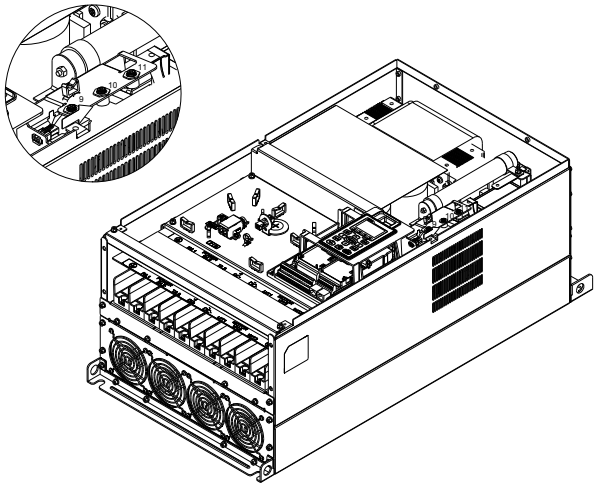

Figure 3

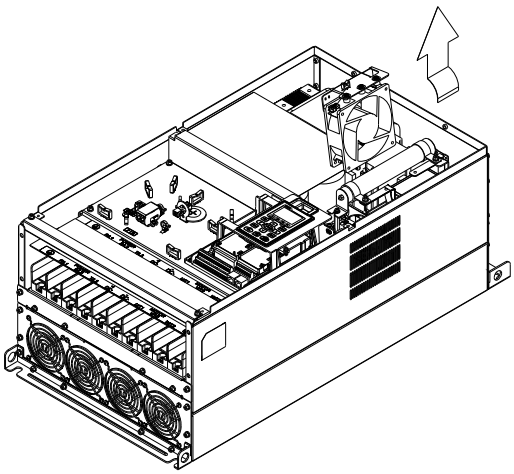

Figure 4

Frame G
Applicable model
VFD2500C63B-00; VFD3150C63B-00; VFD2500C63B-21; VFD3150C63B-21

Fan model『MKC-GFKM』Heat Sink Fan

1. Loosen the screw (figure 1) and remove the cover.
   Screw torque: 12~15kg-cm [10.4~13lb-in][1.18~1.47 Nm].

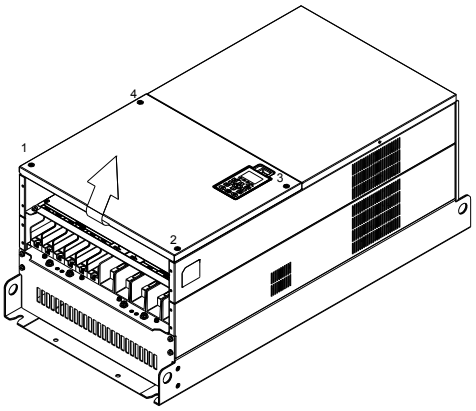

Figure 1

2. For 1~8 shown in the figure 2: Loosen the screws
   Screw torque:35~40kg-cm (30.4~34.7lb-in)[3.43~3.92 Nm]
3. For 9~10 shown in the figure 2: Loosen the screws and removes the cover.
   Screw M4 torque: 14~16kg-cm [12.2~13.9 lb-in][1.37~1.57 Nm].

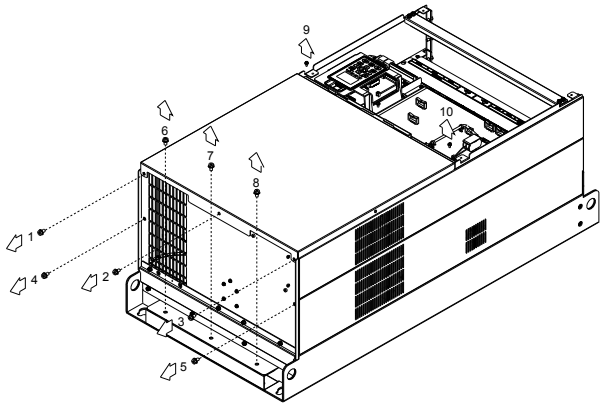

Figure 2

4. Loosen screw 1,2,3 and remove the protective ring (as shown in figure 3) Screw torque: 14~16kg-cm [12.2~13.9 lb-in][1.37~1.57 Nm].

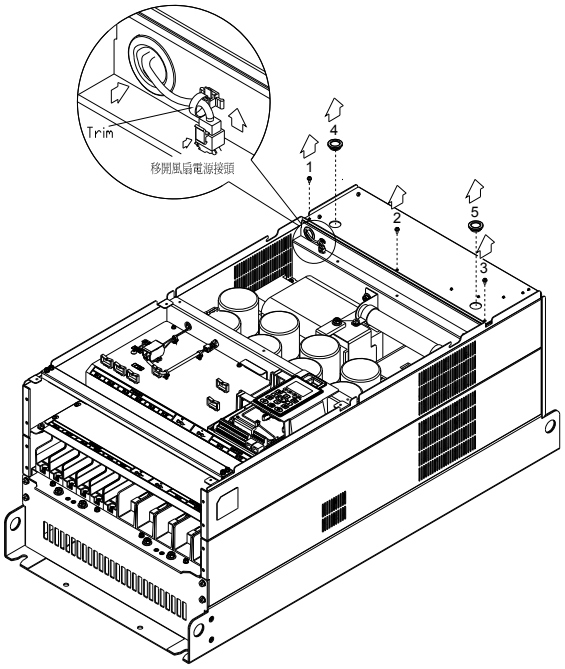

Figure 3

5. Lift the fan by putting your finger through the protective holes, as indicates in 1 and 2 on the figure 4.

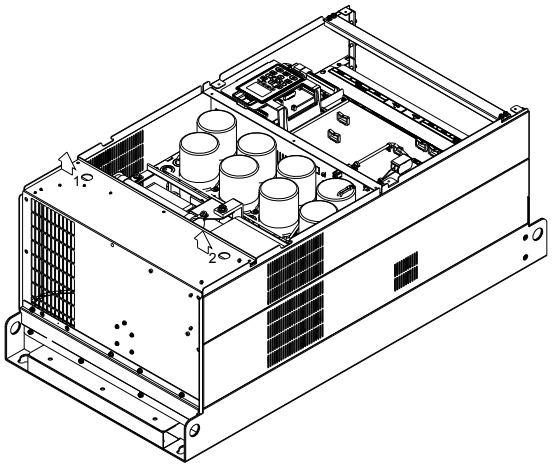

Figure 4

Frame H
Applicable model
VFD4000C63B-00; VFD4500C63B-00; VFD5600C63B-00; VFD6300C63B-00; VFD4000C63B-21; VFD4500C63B-21; VFD5600C63B-21; VFD6300C63B-21

Fan model 『MKC-HFKM』 Heat Sink Fan

1. Loosen the screw and remove the top cover (figure 1)
   Screw torque: 14~16kg-cm [12.2~13.9lb-in][1.37~1.57 Nm]

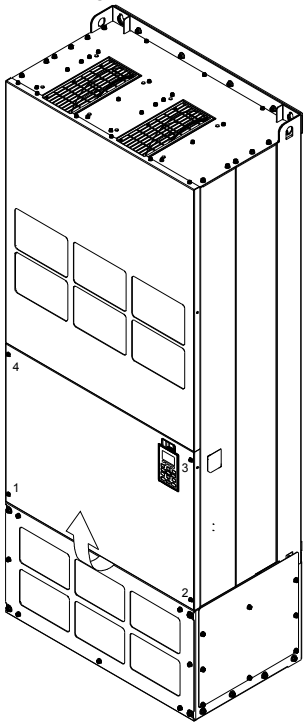

Figure 1

2. Loosen the screw and remove the top cover (figure 2).
   Screw torque: 24~26kg-cm [20.8~22.6lb-in][2.35~2.55 Nm].

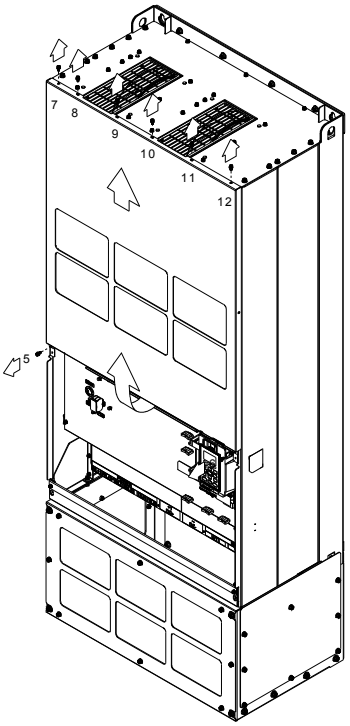

Figure 2

3. Disconnect the fan (figure 3).

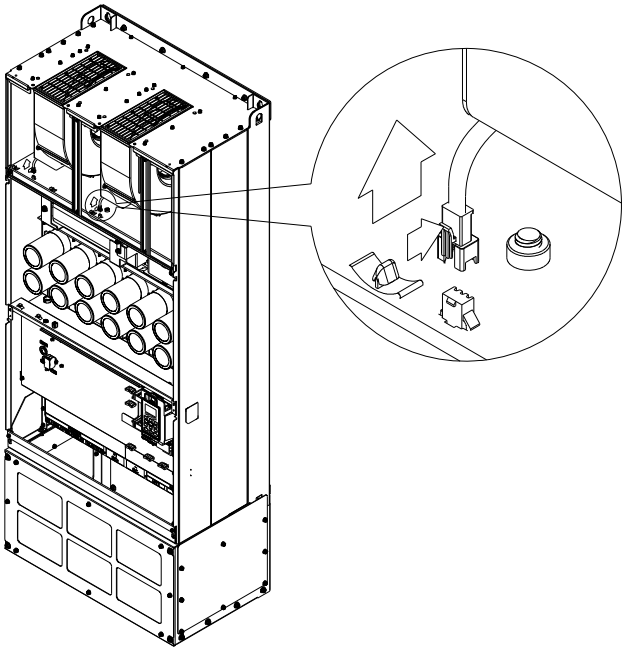

Figure 3

4. Loosen the screw and remove the fan. Make sure fan power is properly disconnected before removal. Screw torque: 24~26kg-cm [20.8~22.6lb-in][2.35~2.55 Nm]. (figure 4)

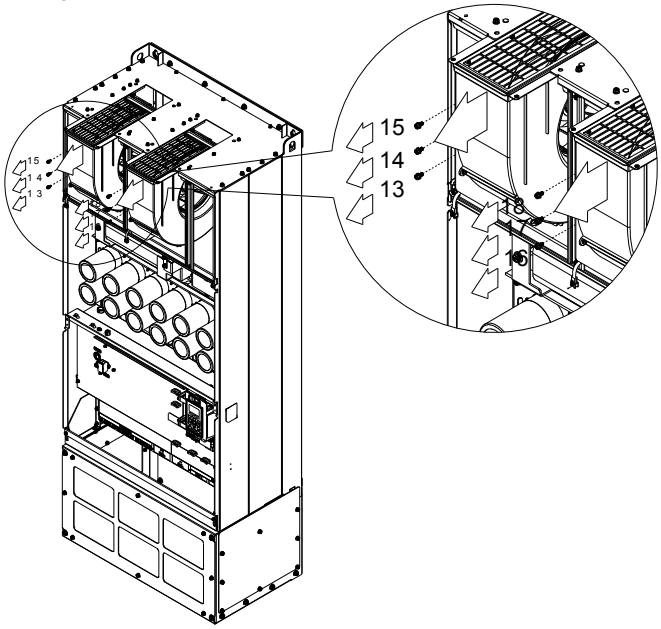

Figure 4

7-11 Flange Mounting Kit

Applicable Models, Frame A~F

Frame A

『MKC-AFM1』

Applicable model

VFD015C53A-21,VFD022C53A-21,VFD037C53A-21

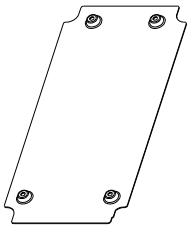

Accessories 1*1

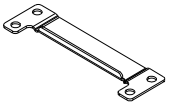

Accessories 2 2

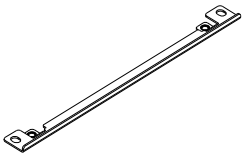

Accessories 3*2

Screw 1 *4
M3*P 0.5; L=6mm

Screw 2*8
M6*P 1.0; L=16mm

Cutout dimension

Unit: mm [inch]

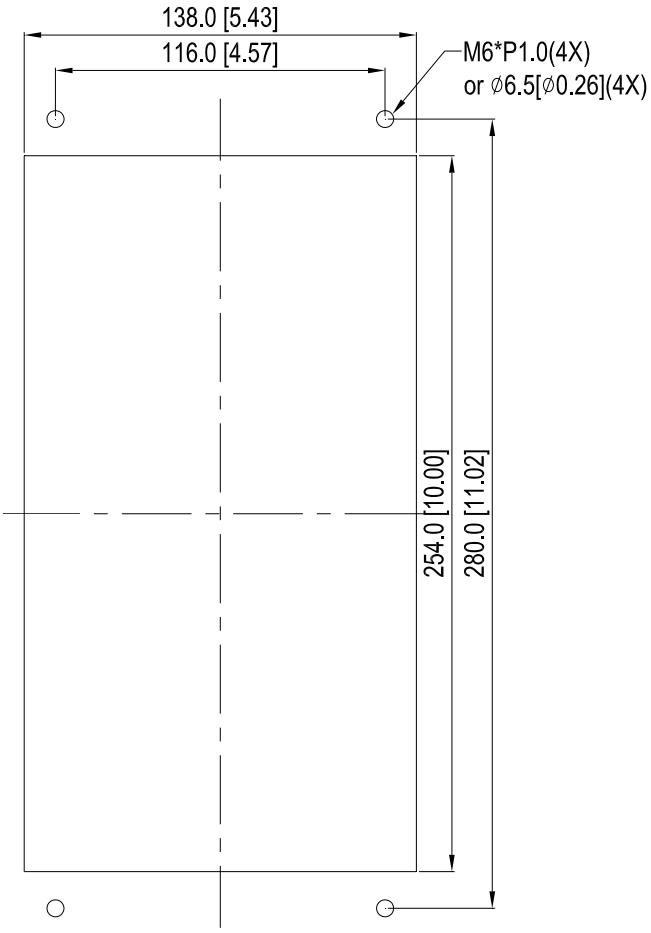

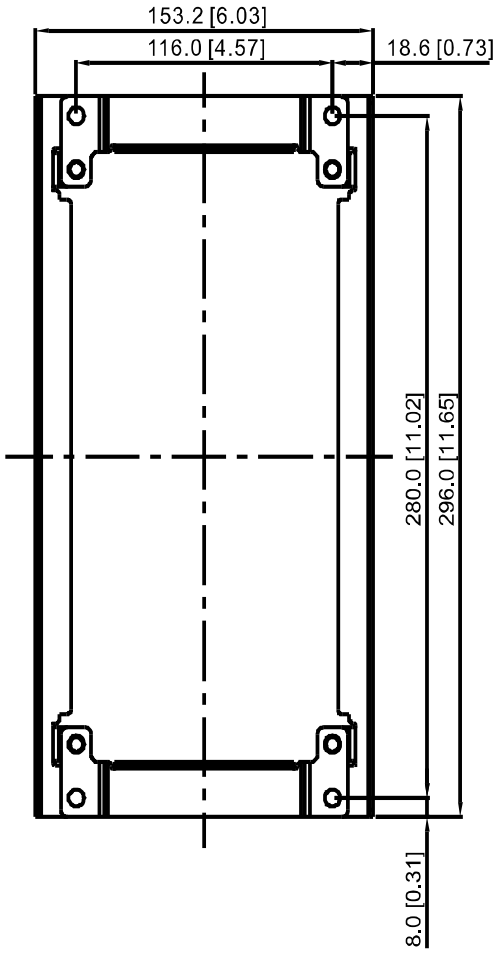

『MKC-AFM1』Installation

1. Install accessory 1 by fastening 4 of the screw 1(M3) (figure 1).
   Screw torque: 6~8kg-cm (5.21~6.94lb-in)[0.59~0.78Nm].

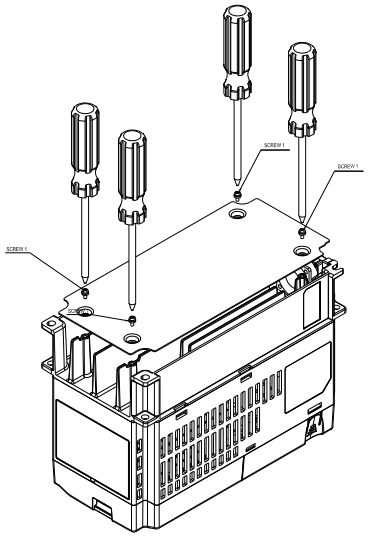

Figure 1

2. Install accessory 2&3 by fastening 2 of the screw 2(M6) (figure 2).
   Screw torque: 25~30kg-cm (21.7~26lb-in)[2.45~2.94Nm].

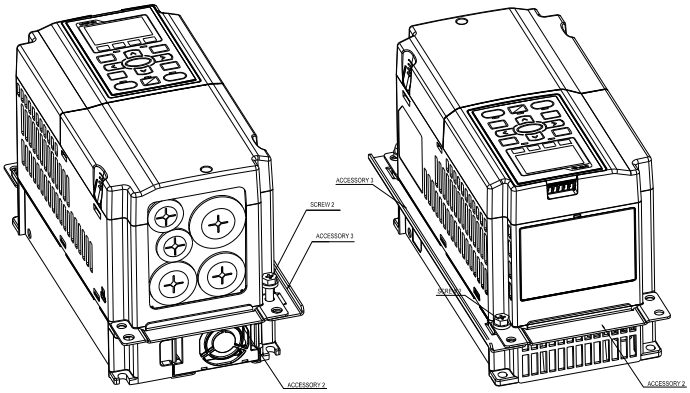

Figure 2

3. Install accessory 2&3 by fastening 2 of the screw 2(M6) (figure 3).
   Screw torque: 25~30kg-cm (21.7~26lb-in)[2.45~2.94Nm].

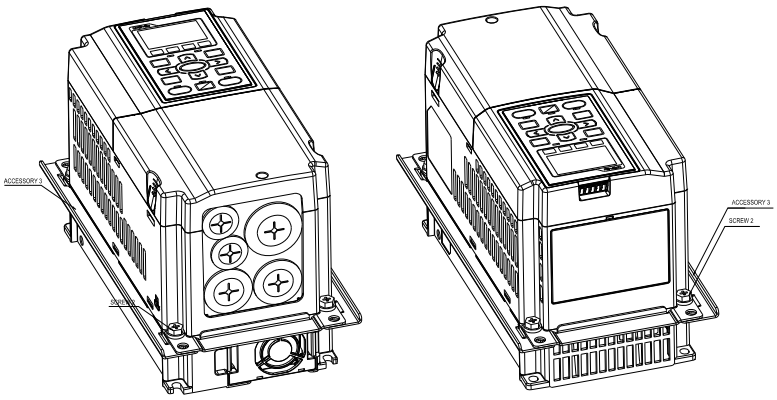

Figure 3

4. Plate installation, place 4 of the screw 2 (M6) (figure 4) through accessory 2&3 and the plate then fasten the screws. Screw torque: 25~30kg-cm (21.7~26lb-in)[2.45~2.94Nm].

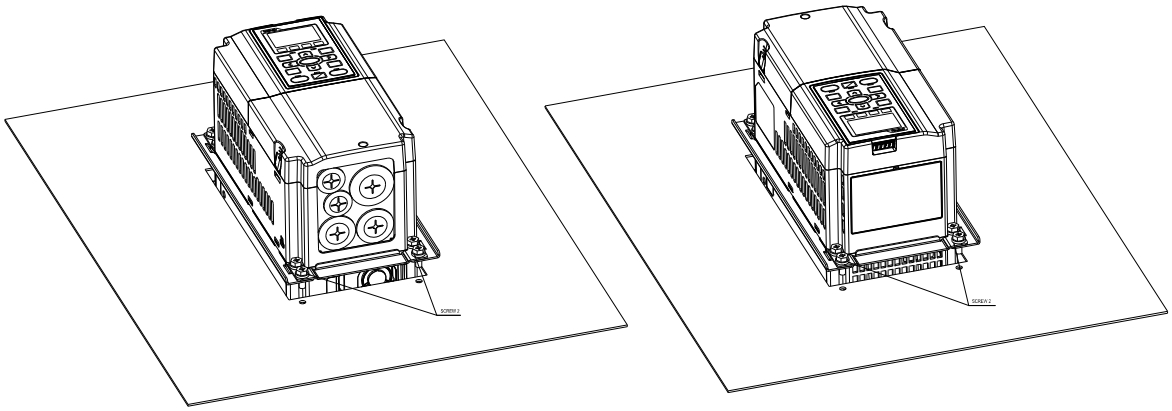

Figure 4

Frame B

『MKC-BFM』

Applicable model

VFD055C53A-21,VFD075C53A-21,VFD110C53A-21,VFD150C53A-21

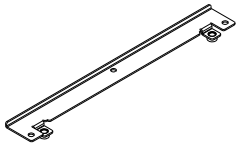

Accessory 1*2

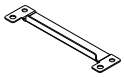

Accessory 2*2

Screw 1 *4 ~ M8*P 1.25;
Screw 2*6 ~ M6*P 1.0;

Cutout dimension

Unit: mm [inch]

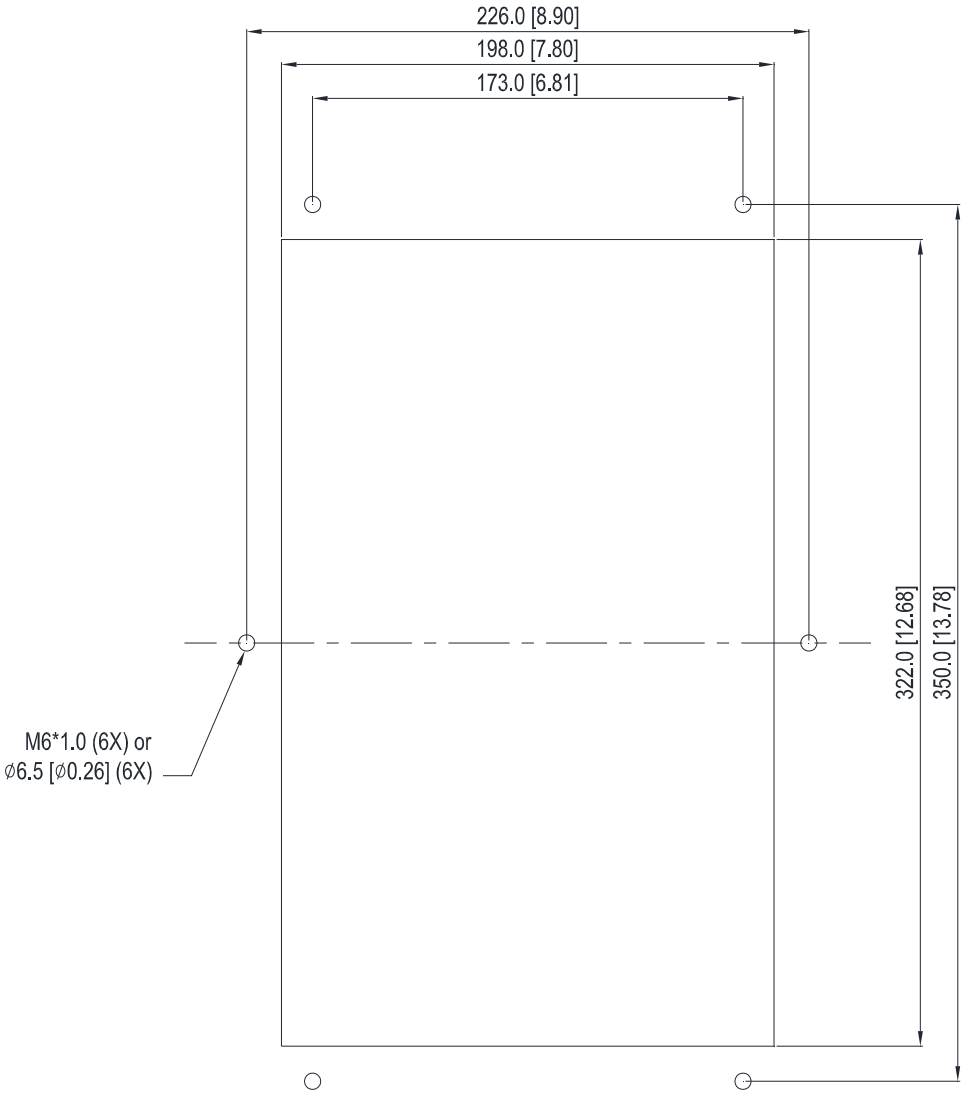

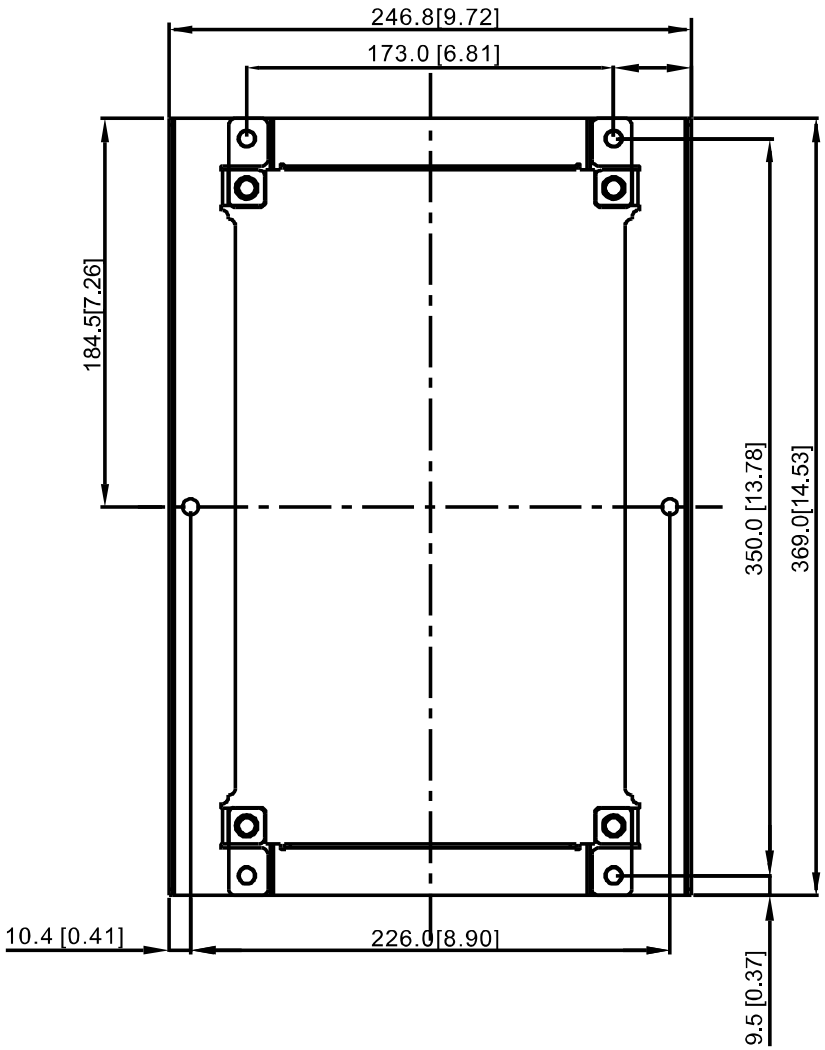
10.4 [0.41]
184.5[7.26]
226.0[8.90]
350.0 [13.78]
9.5 [0.37]
246.8[9.72]
369.0[14.53]
173.0 [6.81]

『MKC-BFM』Installation

1. Install accessory 1& 2 by fastening 4 of the screw 1(M8). Screw torque: 40~45kg-cm (34.7~39.0lb-in) [3.92~4.41Nm]. (As shown in the following figure)

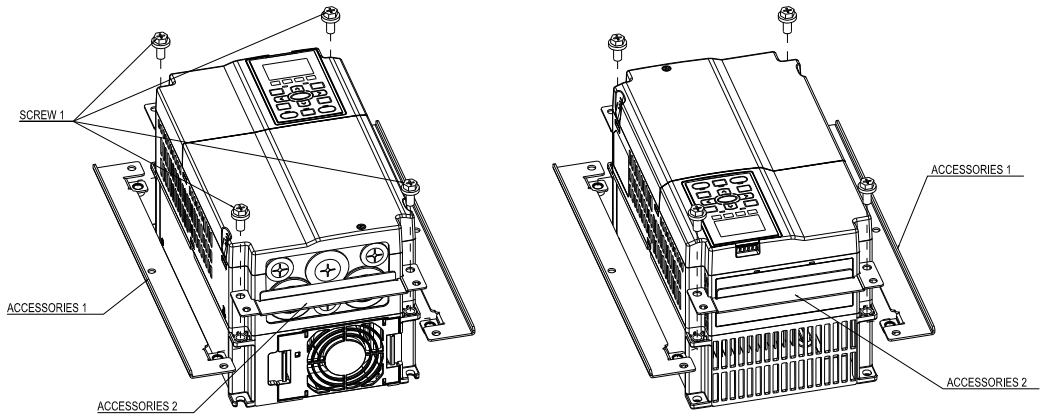

2. Plate installation, place 6 of the screw 2 (M6) through accessory 1&2 and the plate then fasten the screws. Screw torque: 25~30kg-cm (21.7~26lb-in) [2.45~2.94Nm]. (As shown in the following figure)

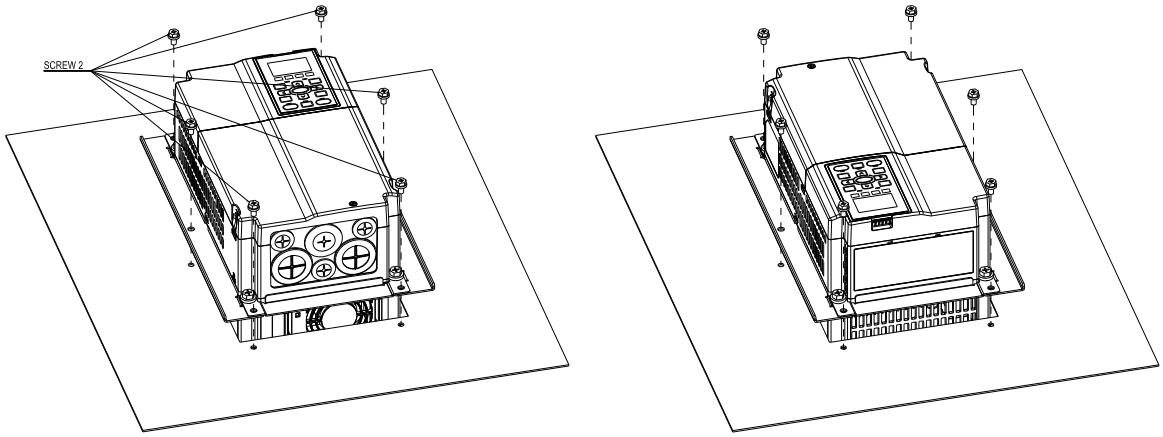

Frame C

『MKC-CFM』

Applicable model

VFD185C63B-21; VFD220C63B-21; VFD300C63B-21; VFD370C63B-21

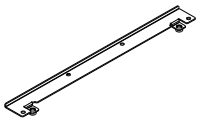

Accessory 1*2

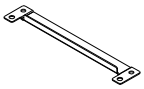

Accessory 2*2

Screw 1*4 ~ M8*P 1.25;
Screw 2*8 ~ M6*P 1.0;

Cutout dimension

Unit: mm [inch]

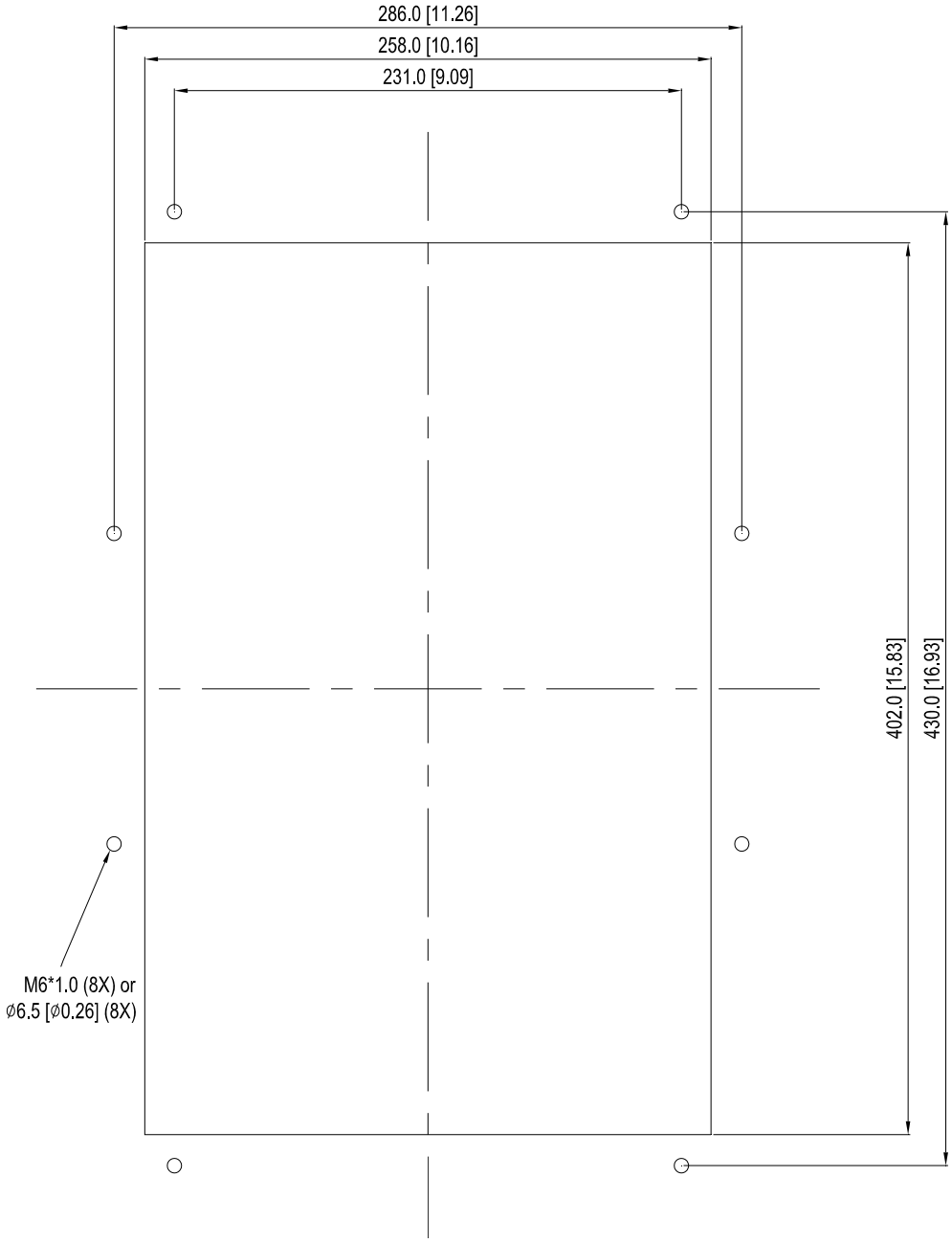

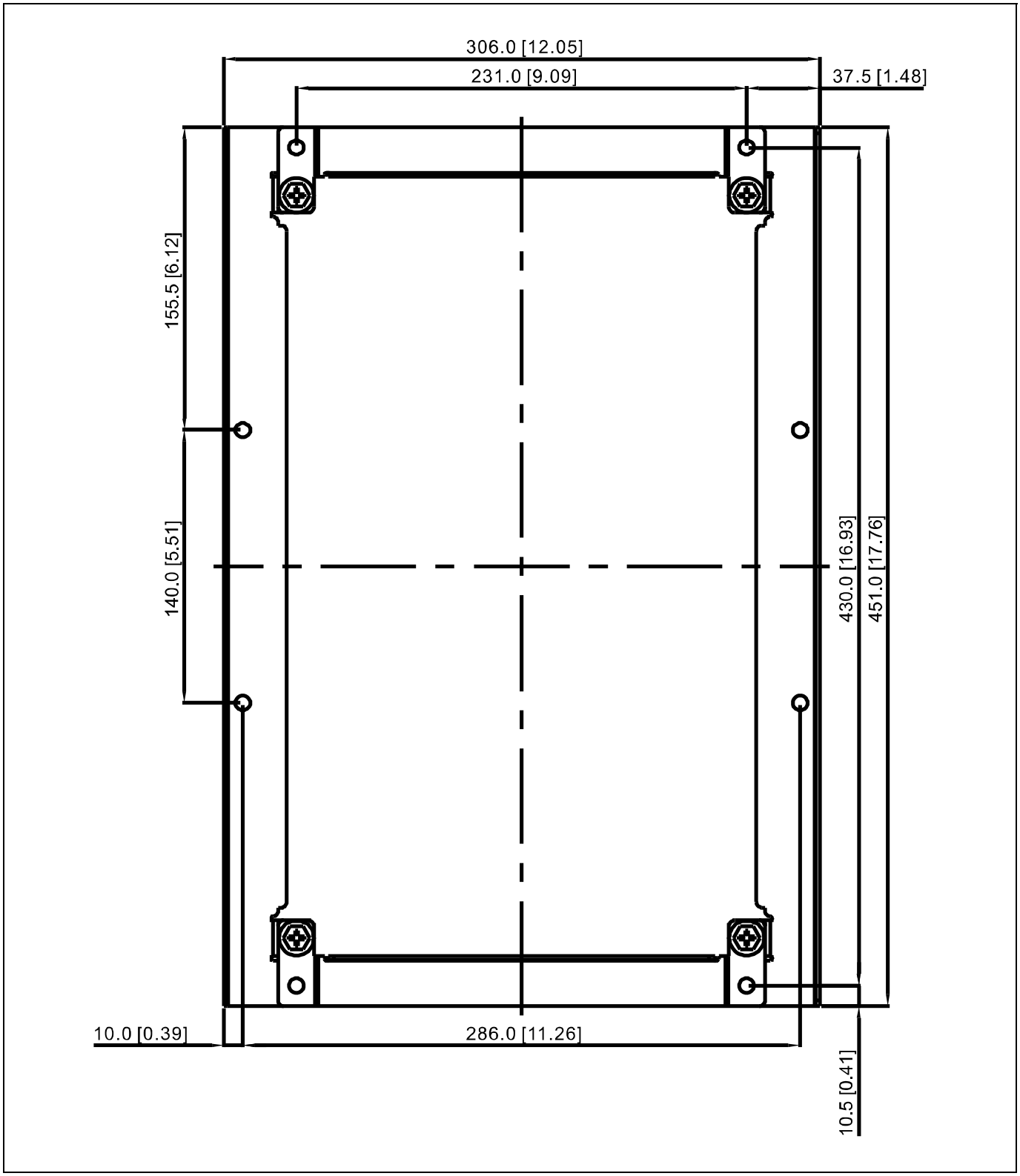
306.0 [12.05]
231.0 [9.09]
37.5 [1.48]
155.5 [6.12]
140.0 [5.51]
430.0 [16.93]
451.0 [17.76]
10.0 [0.39]
286.0 [11.26]
10.5 [0.41]

『MKC-CFM』Installation

1. Install accessory 1& 2 by fastening 4 of the screw 1(M8). Screw torque: 50~55kg-cm (43.4~47.7lb-in) [4.9~5.39 Nm]. (As shown in the following figure)

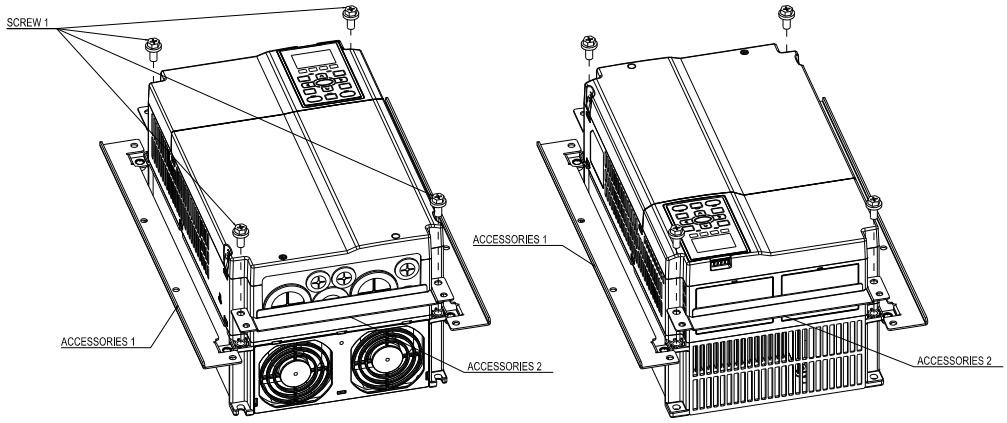

2. Plate installation, place 8 of the screw 2 (M6) through Accessory 1&2 and the plate then fasten the screws. Screw torque: 25~30kg-cm (21.7~26lb-in)[2.45~2.94Nm]. (As shown in the following figure)

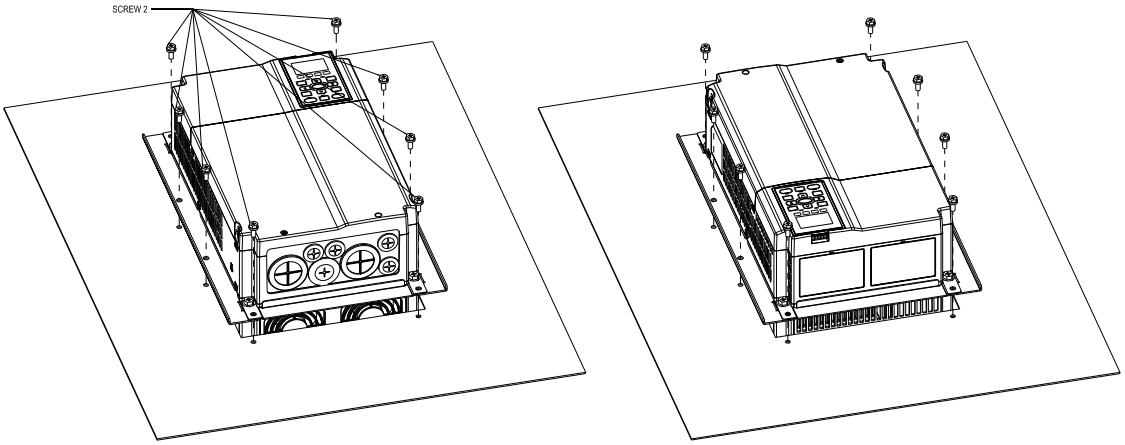

Frame D

Applicable model

VFD450C63B-00; VFD550C63B-00; VFD450C63B-21; VFD550C63B-21

Cutout dimension

Unit: mm [inch]

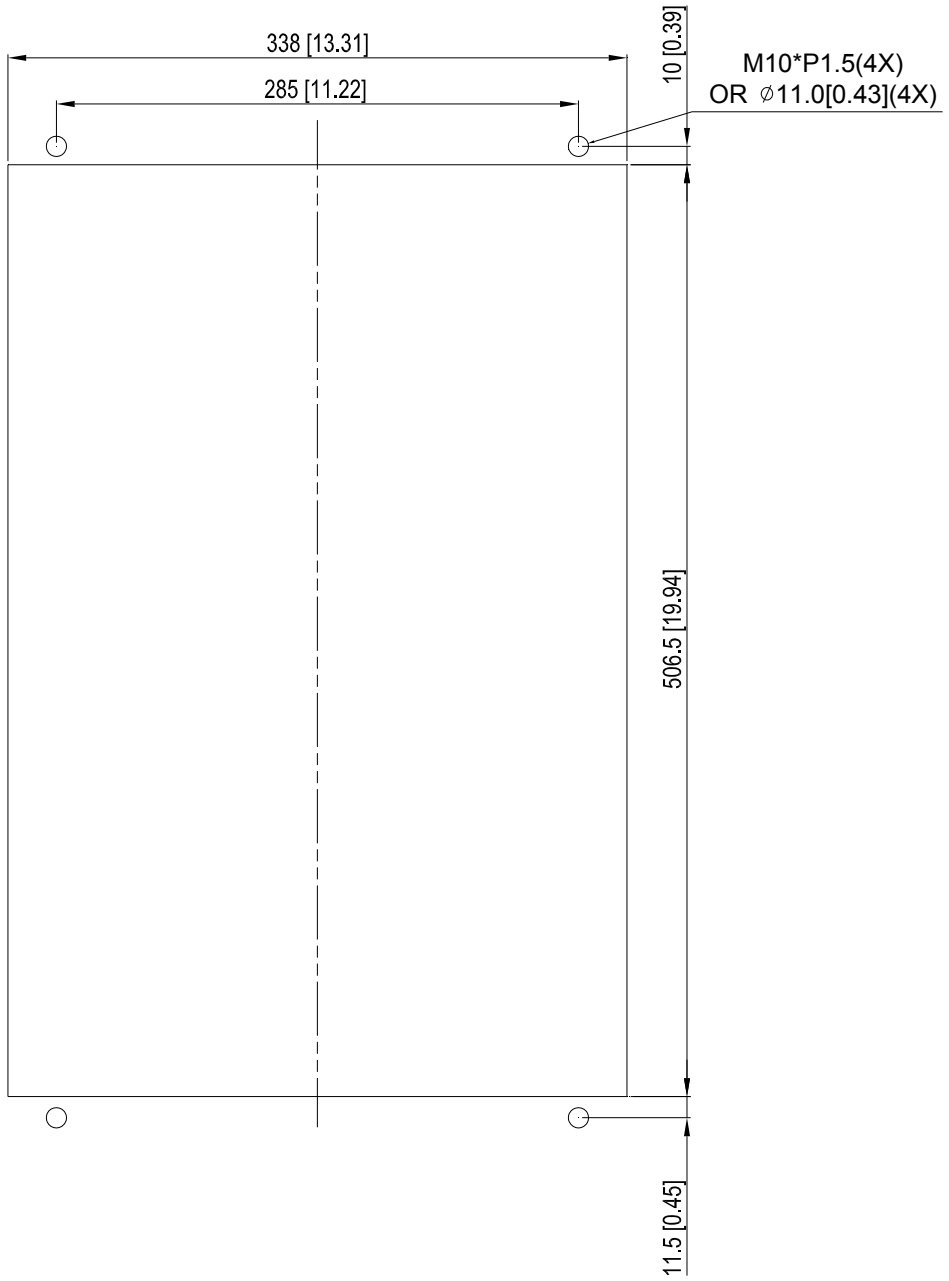

Frame E

Applicable model

VFD750C63B-00; VFD900C63B-00; VFD1100C63B-00; VFD1320C63B-00; VFD750C63B-21; VFD900C63B-21; VFD1100C63B-21; VFD1320C63B-21;

Cutout dimension Unit: mm [inch]

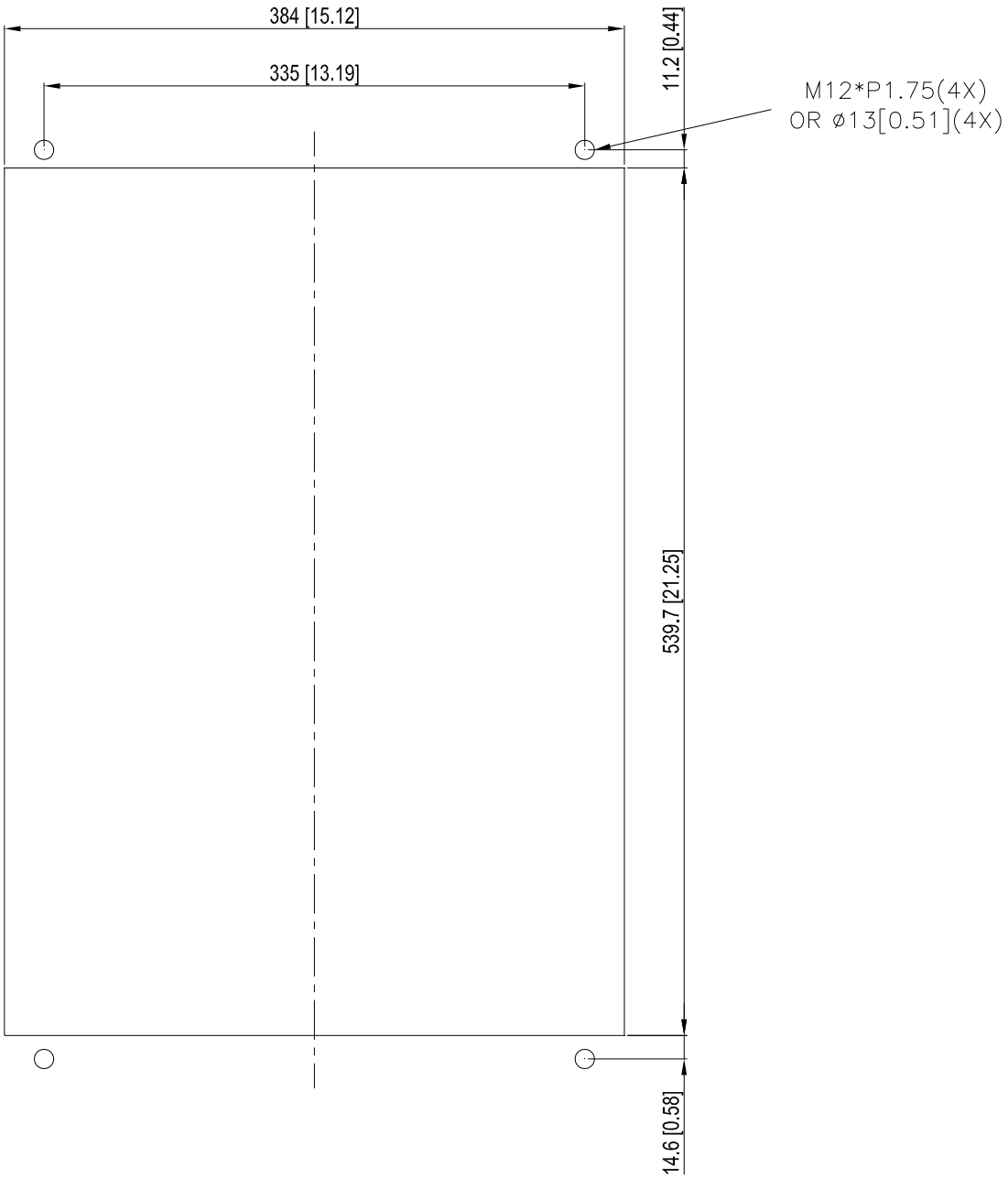

Frame D & E

1. Loosen 8 screws and remove Fixture 2 (as shown in the following figure).

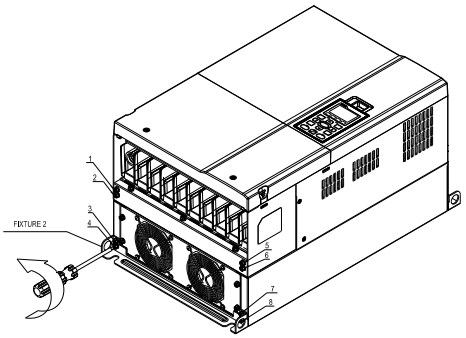

2. Loosen 10 screws and remove Fixture 1 (as shown in the following figure).

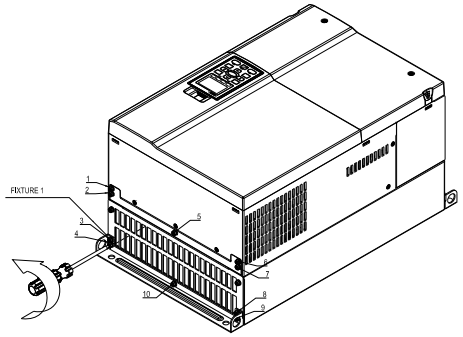

3. Fasten 4 screws (as shown in the following figure). Screw torque: 30~32kg-cm (26.0~27.8lb-in) [2.94~3.14Nm].

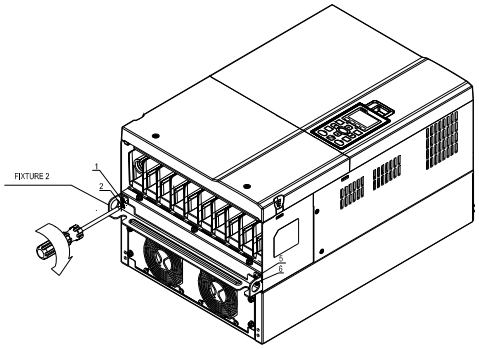

4. Fasten 5 screws (as shown in the following figure). Screw torque: 30~32kg-cm (26.0~27.8lb-in) [2.35~2.55Nm].

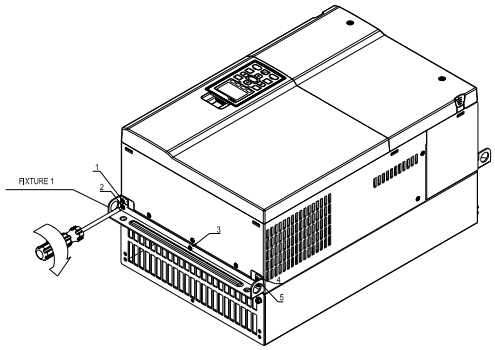

5. Fasten 4 screws (as shown in the following figure). Screw torque: 24~26kg-cm (20.8~22.6lb-in) [2.35~2.55Nm].

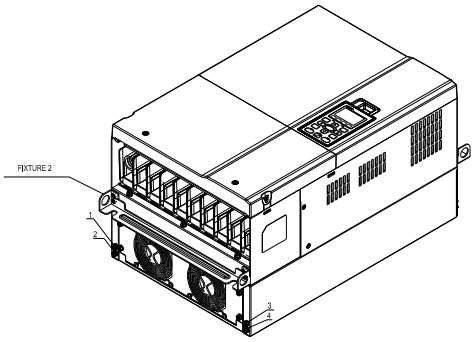

6. Fasten 5 screws (as shown in the following figure). Screw torque: 24~26kg-cm (20.8~22.6lb-in) [2.94~3.14Nm].

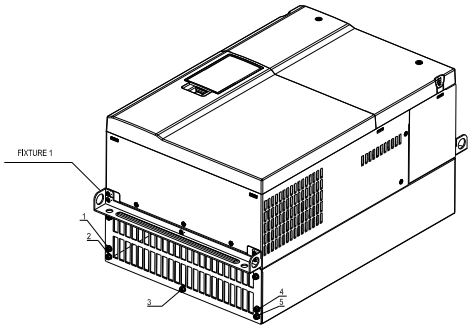

7. Place 4 screws (M10) through Fixture 1&2 and the plate then fasten the screws. (as shown in the following figure)
   Frame D0/D M10*4
   Screw torque: 200~240kg-cm (173.6~208.3lb-in)[19.6~23.52Nm].
   Frame E M12*4
   Screw torque: 300~400kg-cm (260~347lb-in)[29.4~39.2Nm].

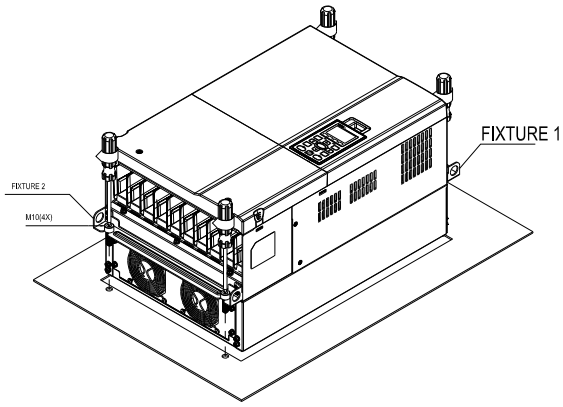

Frame F

Applicable model

VFD1600C63B-00; VFD2000C63B-00; VFD1600C63B-21; VFD2000C63B-21

Cutout dimension

Unit: mm [inch]

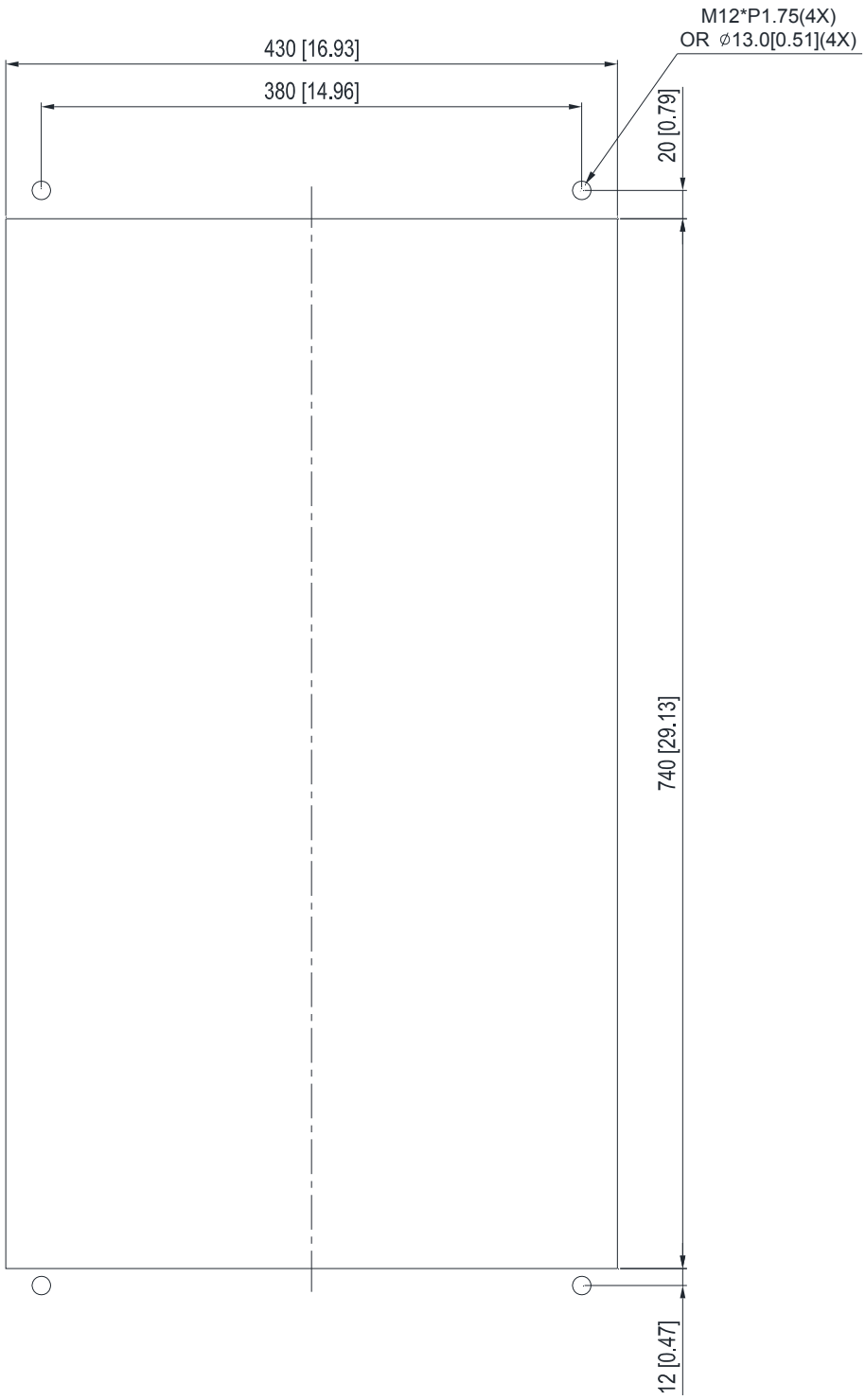

Frame F

1. Loosen 12 screws and remove Fixture 2.

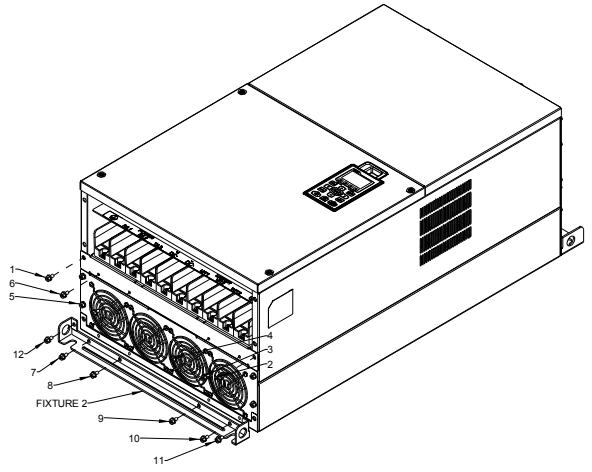

2. Loosen 12 screws and remove Fixture 2.
   Screw torque: 24~26kg-cm (20.8~22.6Ib-in) [2.35~2.55Nm].

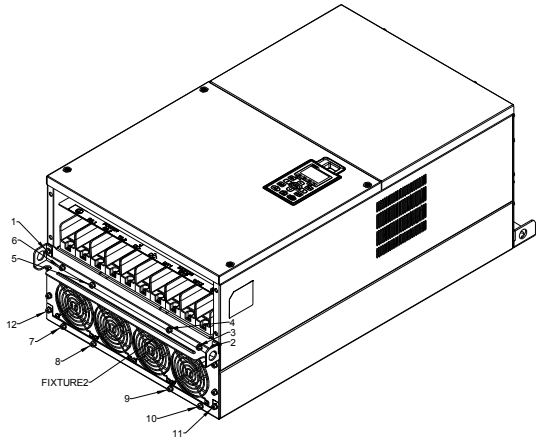

3. Loosen screw 13 ~26 and remove Fixture 1.

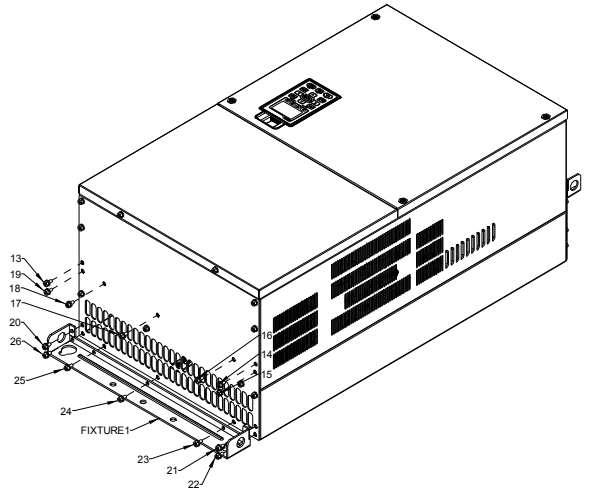

4. Install Fixture 1 by fasten screw 13 ~26
   Screw torque: 24~26kg-cm (20.8~22.6Ib-in) [2.35~2.55Nm].

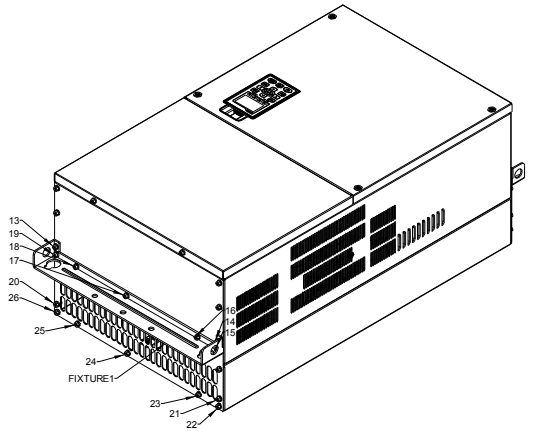

5. Place 4 of the M12 screws through Fixture 1&2 and plate then fasten the screws.
   Screw torque: 300~400kg-cm (260~347Ib-in)[29.4~39.2Nm].

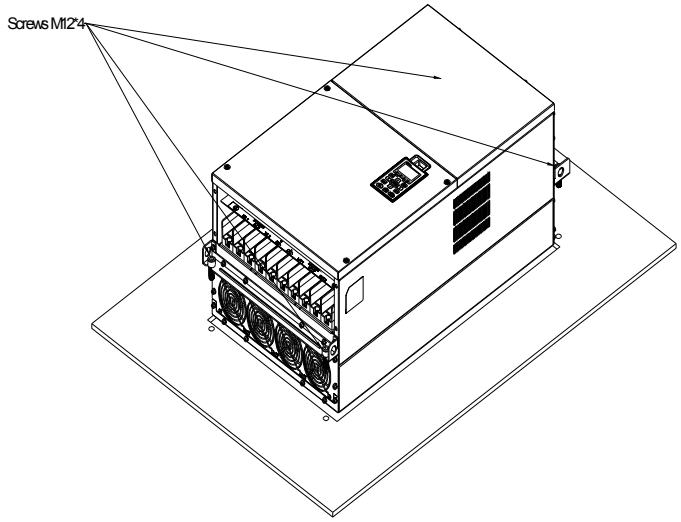

7-12 USB/RS-485 Communication Interface IFD6530

⚠ Warning

✓ *Please thoroughly read this instruction sheet before installation and putting it into use.*

✓ *The content of this instruction sheet and the driver file may be revised without prior notice. Please consult our distributors or download the most updated instruction/driver version at http://www.delta.com.tw/product/em/control/cm/control_cm_main.asp*

1. Introduction

IFD6530 is a convenient RS-485-to-USB converter, which does not require external power-supply and complex setting process. It supports baud rate from 75 to 115.2kbps and auto switching direction of data transmission. In addition, it adopts RJ-45 in RS-485 connector for users to wire conveniently. And its tiny dimension, handy use of plug-and-play and hot-swap provide more conveniences for connecting all DELTA IABU products to your PC.

Applicable Models: All DELTA IABU products.

(Application & Dimension)

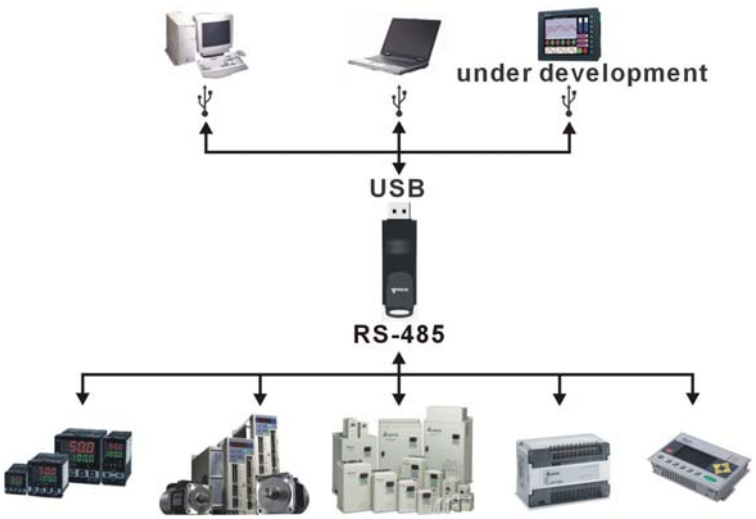

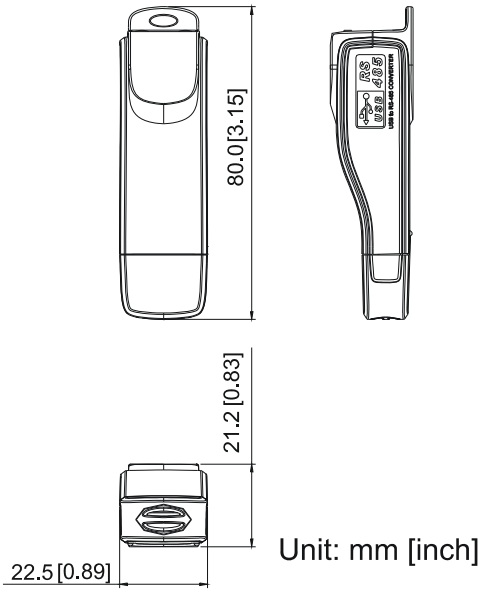

2. Specifications

Power supply	No external power is needed
Power consumption	1.5W
Isolated voltage	2,500VDC
Baud rate	75, 150, 300, 600, 1,200, 2,400, 4,800, 9,600, 19,200, 38,400, 57,600, 115,200 bps
RS-485 connector	RJ-45
USB connector	A type (plug)
Compatibility	Full compliance with USB V2.0 specification
Max. cable length	RS-485 Communication Port: 100 m
Support RS-485 half-duplex transmission	

■ **RJ-45**

PIN	Description
1	Reserved
2	Reserved
3	GND
4	SG-

PIN	Description
5	SG+
6	GND
7	Reserved
8	+9V

3. Preparations before Driver Installation

Please extract the driver file (IFD6530_Drivers.exe) by following steps. You could find driver file (IFD6530_Drivers.exe) in the CD supplied with IFD6530.

✐ **Note:** DO NOT connect IFD6530 to PC before extracting the driver file.

STEP 1

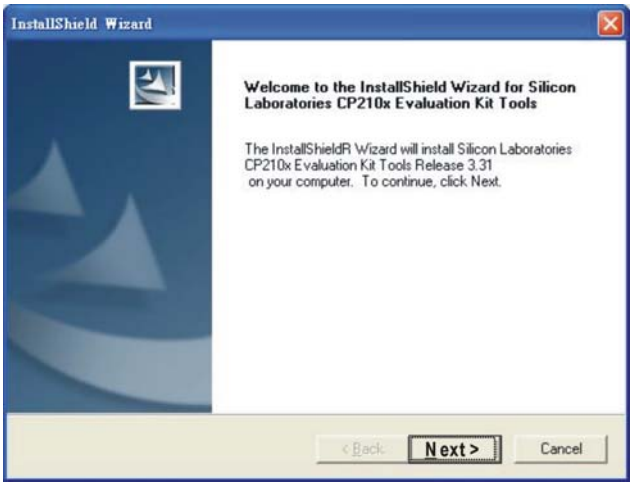

STEP 2

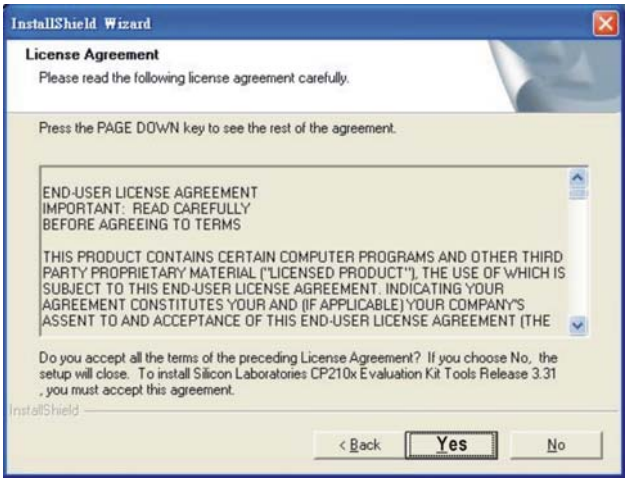

STEP 3

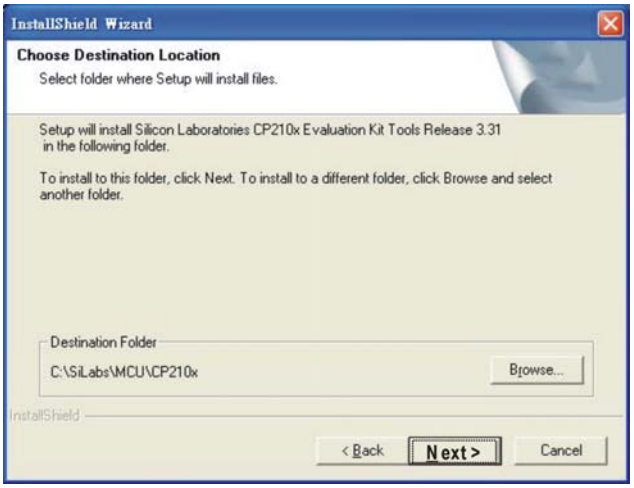

STEP 4

STEP 5

You should have a folder marked SiLabs under drive C. c:\ SiLabs

4. Driver Installation

After connecting IFD6530 to PC, please install driver by following steps.

STEP 1

STEP 2

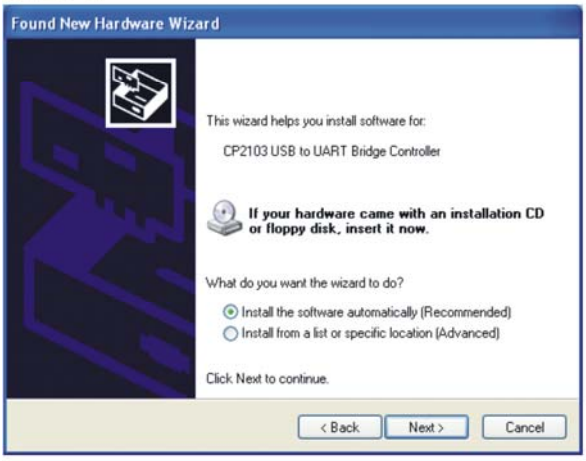

OR

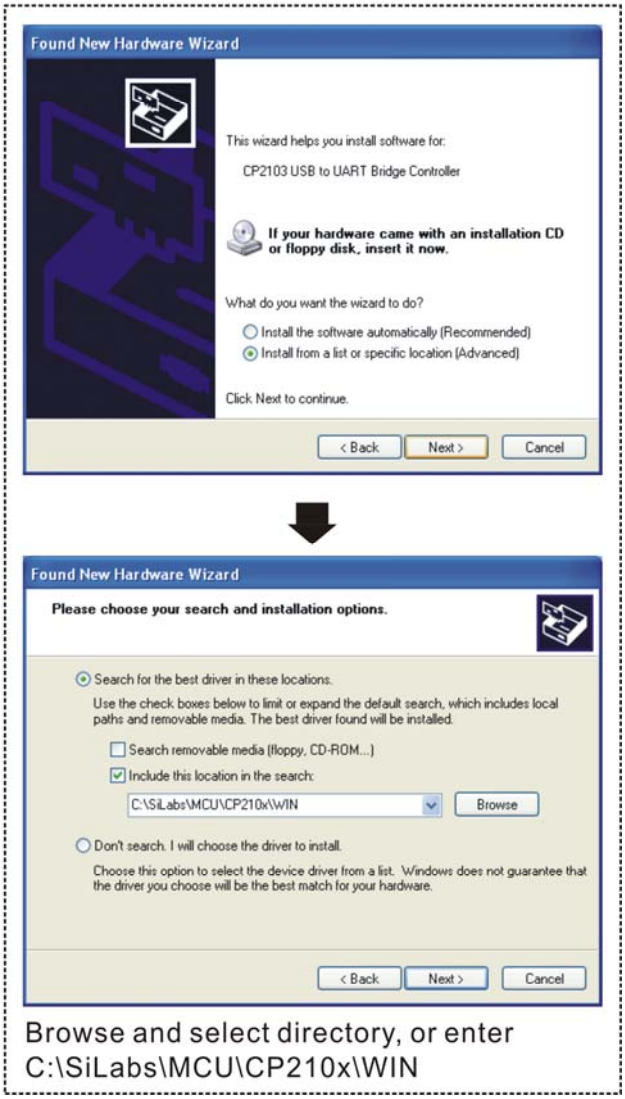

Browse and select directory, or enter C:\SiLabs\MCU\CP210x\WIN

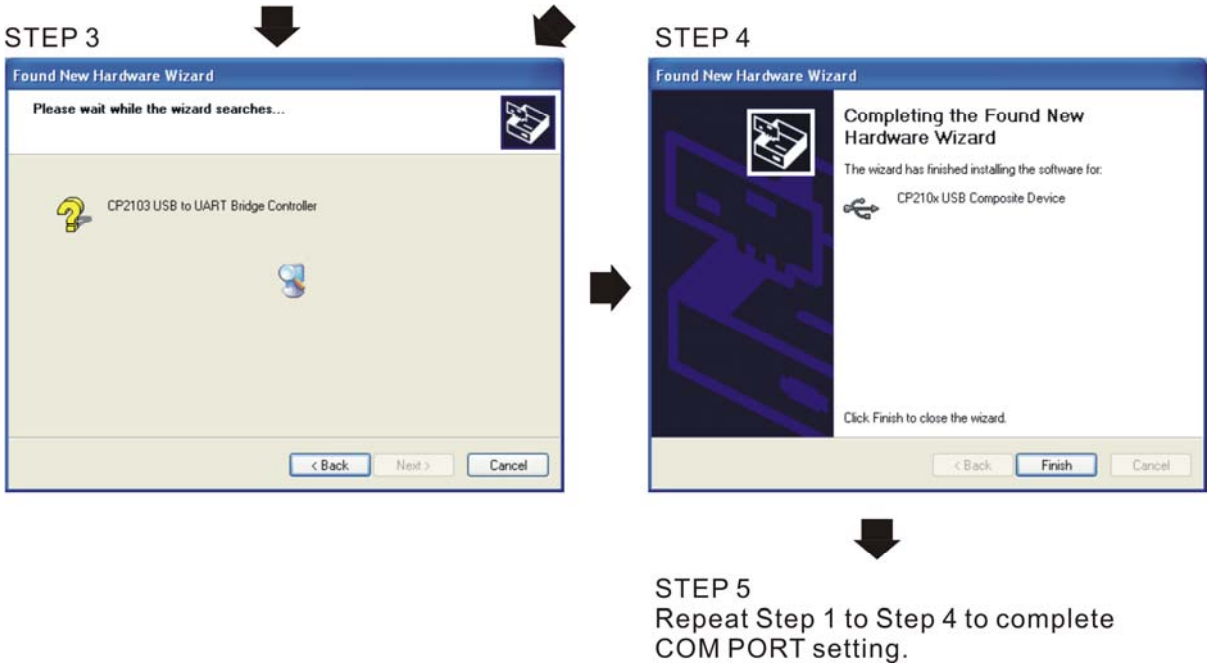

5. LED Display

1. Steady Green LED ON: power is ON.
2. Blinking orange LED: data is transmitting.

Chapter 8 Option Cards

8-1 Removed Key Cover

8-2 Srews Specification for Option Card Terminals

8-3 EMC-D42A

8-4 EMC-D611A

8-5 EMC-R6AA

8-6 EMC-BPS01

8-7 CMC-MOD01

8-8 CMC-PD01

8-9 CMC-DN01

8-10 CMC-EIP01

8-11 EMC-COP01

Please select applicable option cards for your drive or contact local distributor for suggestion. To prevent drive damage during installation, please removes the digital keypad and the cover before wiring. Refer to the following instruction.

8-1 Removed key cover

Frame A & B & C Screw Torque: 8~10 Kg-cm [6.9~8.7 lb-in.] (0.78~0.98 Nm)

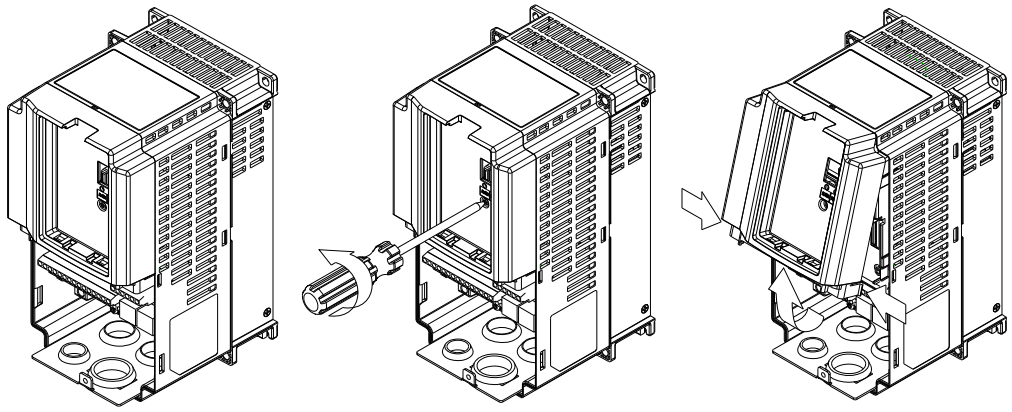

Frame D Screw Torque: 8~10 Kg-cm [6.9~8.7 lb-in.] (0.78~0.98 Nm)

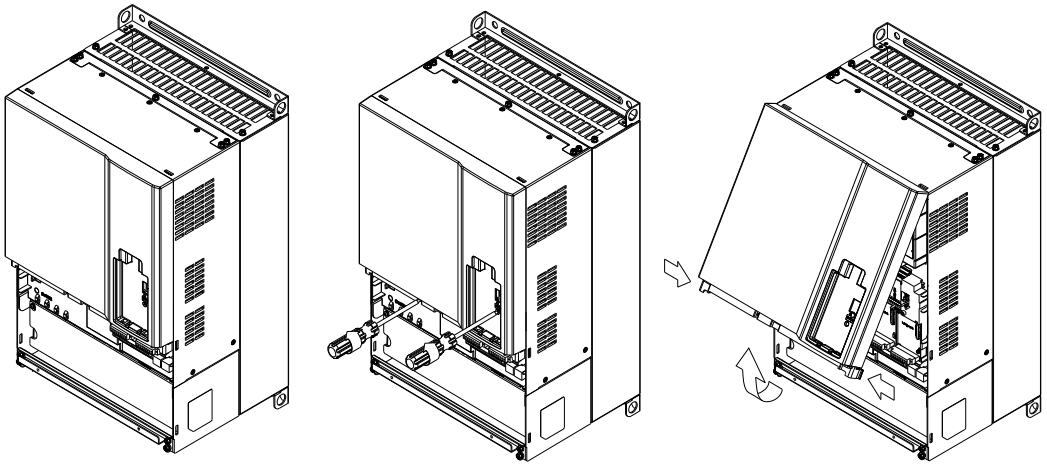

Frame E Slightly lift the cover then pull to remove.

Screw Torque: 12~15 Kg-cm [10.4~13 lb-in.] (1.18~1.47 Nm)

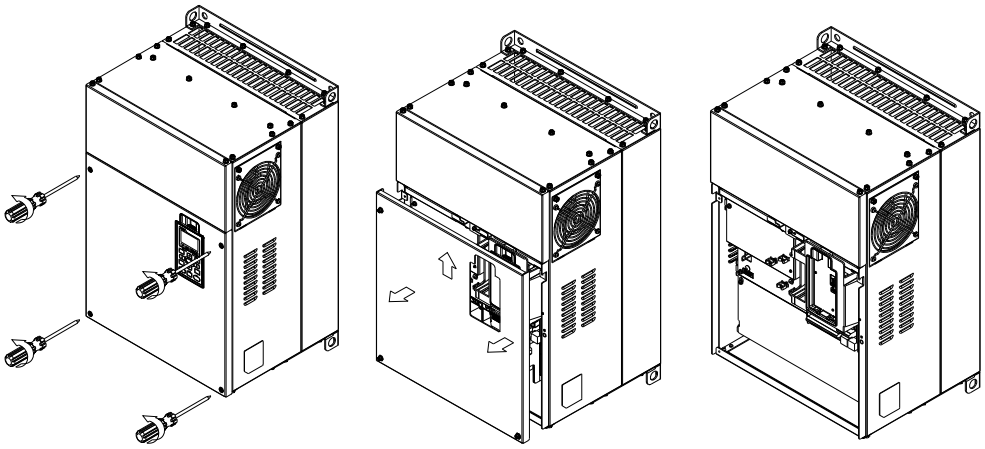

Frame F Screw Torque: 12~ 15 Kg-cm [10.4~13 lb-in.] (1.18~1.47 Nm)

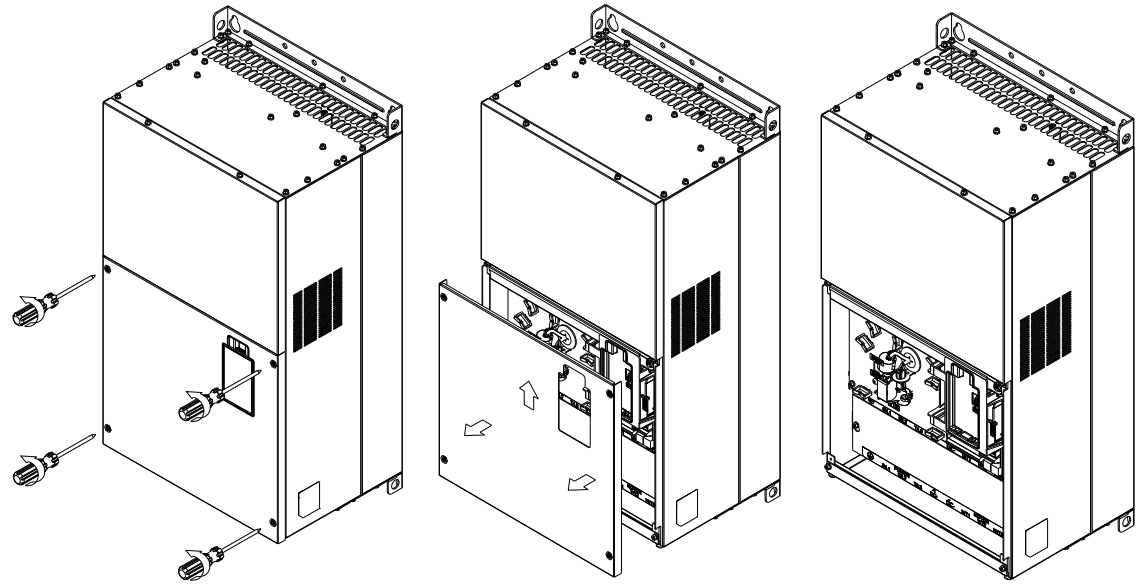

Frame G Screw Torque: 12~15 Kg-cm [10.4~13 lb-in.] (1.18~1.47 Nm)

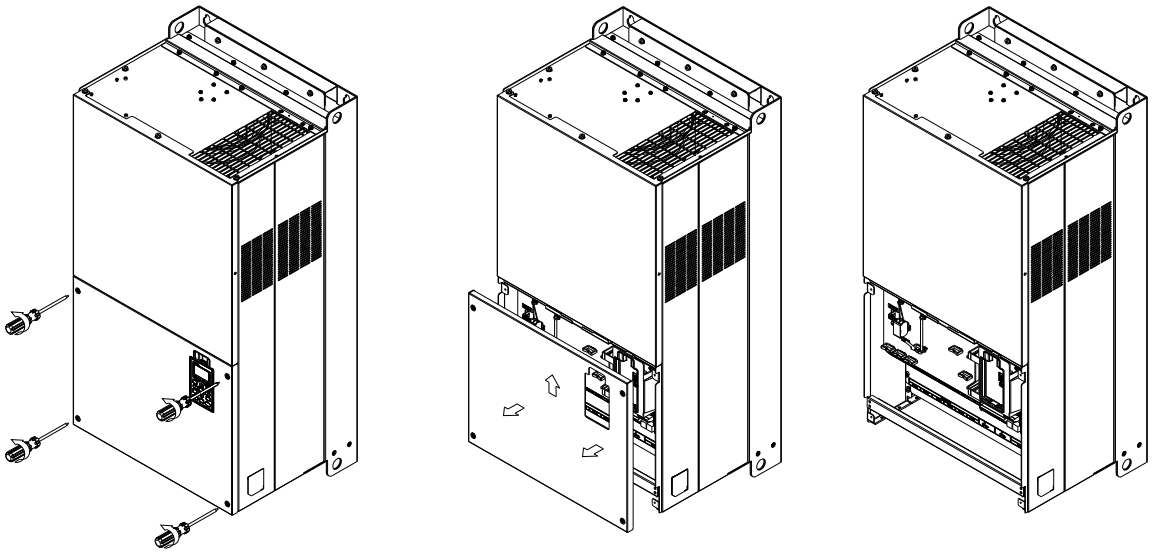

Frame H Screw Torque: 14~16 Kg-cm [12.15~13.89 lb-in.] (1.37~1.57 Nm)

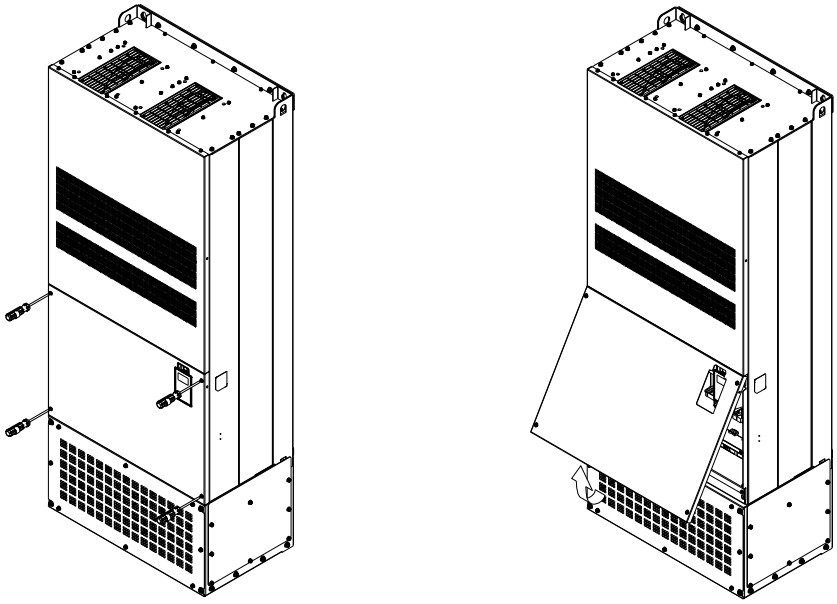

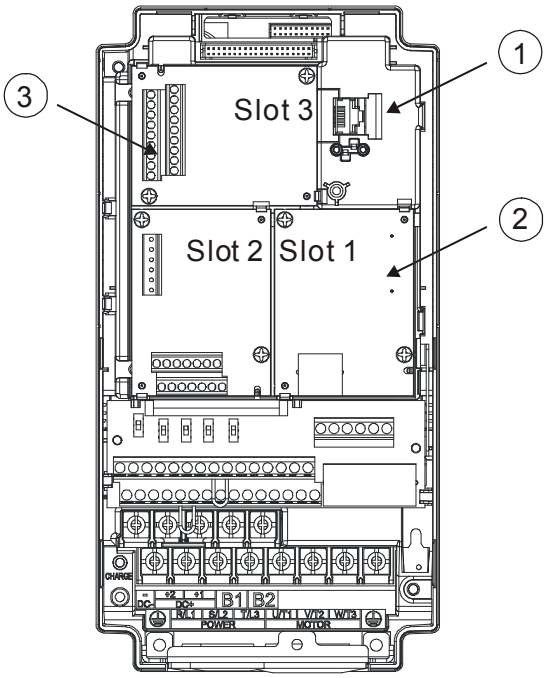

1	RJ45 (Socket) for digital keypad KPC-CC01; KPC-CE01 Please refer to CH10 Digital Keypad for more details on KPC-CE01. Please refer to CH10 Digital Keypad for more details on optional accessory RJ45 extension cable.
2	Communication extension card (Slot 1) CMC-MOD01; CMC-PD01; CMC-DN01; CMC-EIP01; EMC-COP01;
3	I/O & Relay extension card (Slot 3) EMC-D42A; EMC-D611A; EMC-R6AA; EMC-BPS01;

8-2 Screws Specification for option card terminals:

EMC-D42A EMC-D611A EMC-BPS01	Wire gauge	24~12 AWG（0.205~3.31 mm2）
	Torque	5 Kg-cm [4.4 lb-in] (0.5 Nm)
EMC-R6AA	Wire gauge	26~16 AWG（0.128~1.31 mm2）
	Torque	8 Kg-cm [7 lb-in] (0.8 Nm)

I/O & Relay extension card (Slot 3)

EMC-D42A

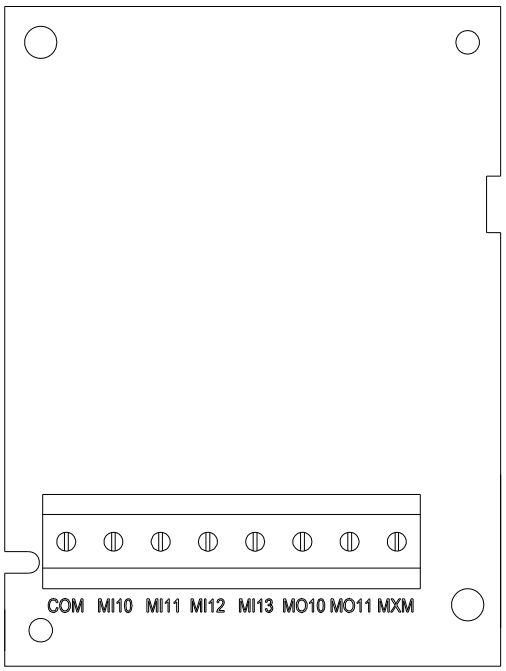

EMC-R6AA

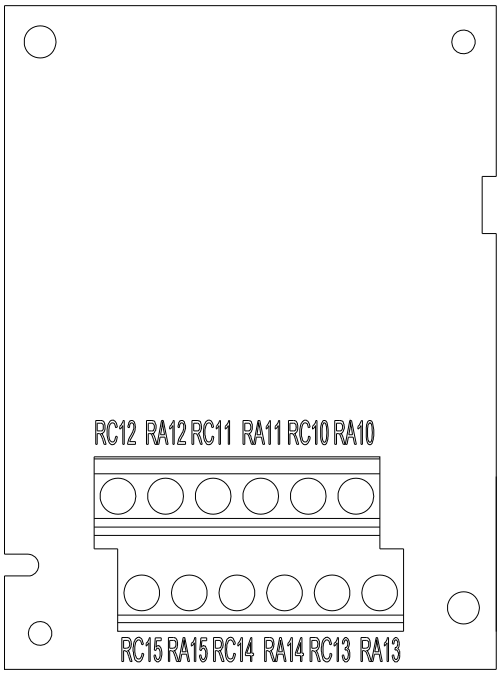

EMC-BPS01

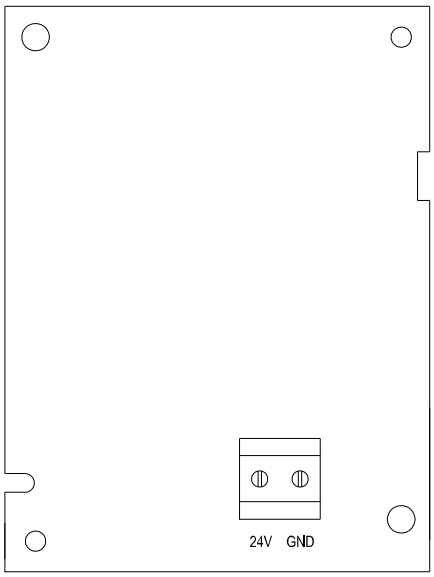

EMC-D611A

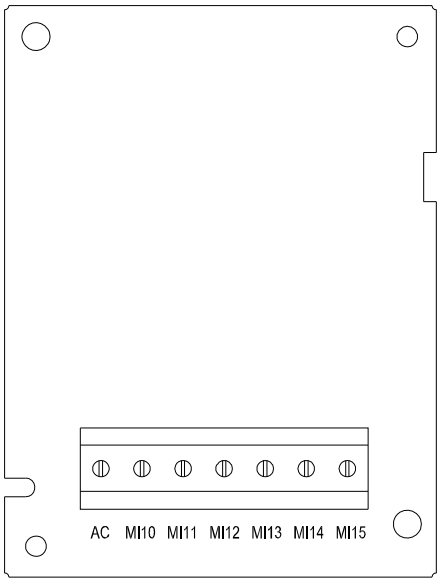

Communication extension card (Slot 1)

CMC-PD01 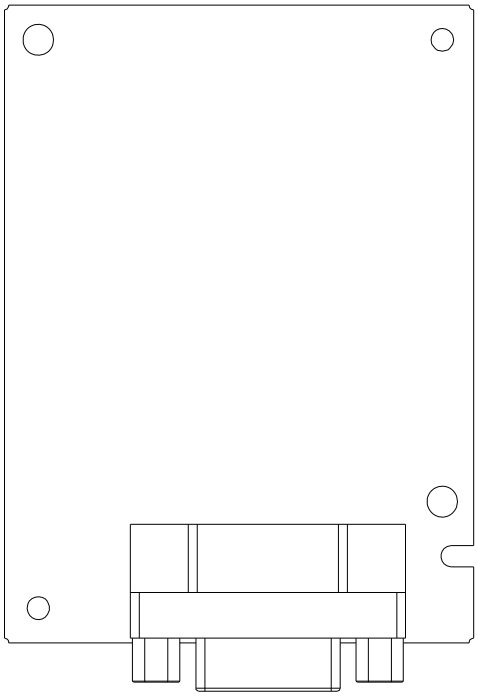	CMC-DN01 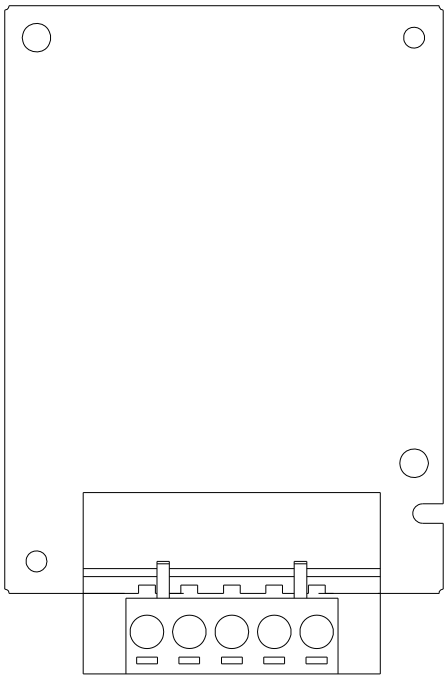
CMC-MOD01/ CMC-EIP01 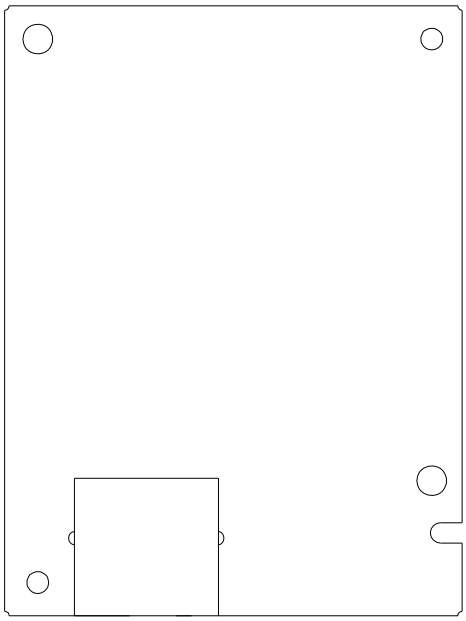	EMC-COP01 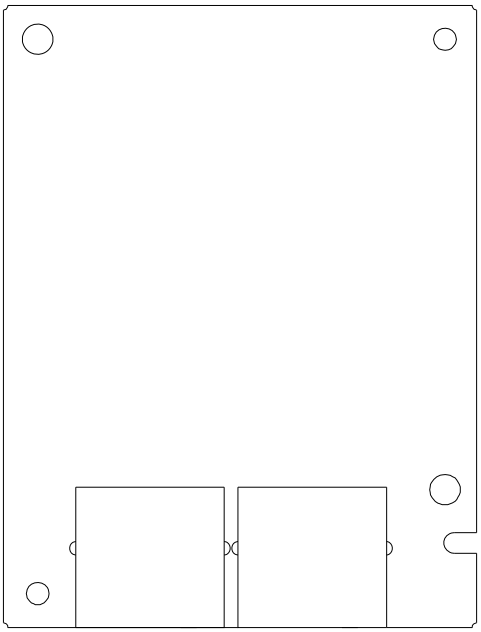

8-3 EMC-D42A

	Terminals	Descriptions
I/O Extension Card	COM	Common for Multi-function input terminals Select SINK（NPN）/SOURCE（PNP）in J1 jumper / external power supply
	MI 10~ MI 13	Refer to parameters 02-26~02-29 to program the multi-function inputs MI 10~MI 13. Internal power is applied from terminal E24: +24 Vdc±5% 200mA, 5W External power +24 VDC: max. voltage 30 VDC, min. voltage 19 VDC, 30W ON: the activation current is 6.5mA OFF: leakage current tolerance is 10 μA
	MO10~MO11	Multi-function output terminals (photocoupler) The AC motor drive releases various monitor signals, such as drive in operation, frequency attained and overload indication, via transistor (open collector). 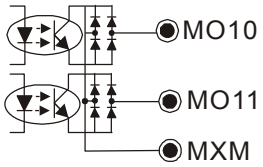
	MXM	Common for multi-function output terminals MO10, MO11(photocoupler) Max 48 VDC 50mA

8-4 EMC-D611A

	Terminals	Descriptions
I/O Extension Card	AC	AC power Common for multi-function input terminal (Neutral)
	MI 10~ MI 15	Refer to Pr. 02.26~ Pr. 02.31 for multi-function input selection Input voltage: 100~130 VAC Input frequency: 47~63 Hz Input impedance: 27 Kohm Terminal response time: ON: 10 ms OFF: 20 ms

8-5 EMC-R6AA

	Terminals	Descriptions
Relay Extension Card	R10A~R15A R10C~R15C	Refer to Pr. 02.36~ Pr. 02.41 for multi-function output selection Resistive load: 5A (N.O.) 250 VAC 5A (N.O.) 30 VDC Inductive load (COS 0.4) 2.0A (N.O.) 250 VAC 2.0A (N.O.) 30 VDC It is used to output each monitor signal, such as drive is in operation, frequency attained or overload indication.

8-6 EMC-BPS01

	Terminals	Descriptions
External Power Supply	24V GND	Input power: 24V±5% Maximum input current:0.5A Note: 1) Do not connect control terminal +24V (Digital control signal common: SOURCE) directly to the EMC-BPS01input terminal 24V. 2) Do not connect drive control terminal GND directly to the EMC-BPS01 input termina GND.
		Function: When the drive only powered by EMC-BPS01, the communication can be assured and support all communication cards and following functions: Parameters read and write Keypad can be displayed Keypad buttom can be operated (except RUN) Analog input is effective Multi-input (FWD, RV, MI 1~MI 8) needs external power supply to operate Following functions are not supported： Relay output (including extension card), PLC function

8-7 CMC-MOD01

■ Features

1. Supports Modbus TCP protocol
2. MDI/MDI-X auto-detect
3. Baud rate: 10/100Mbps auto-detect
4. E-mail alarm
5. AC motor drive keypad/EtherNet configuration
6. Virtual serial port.

■ Product File

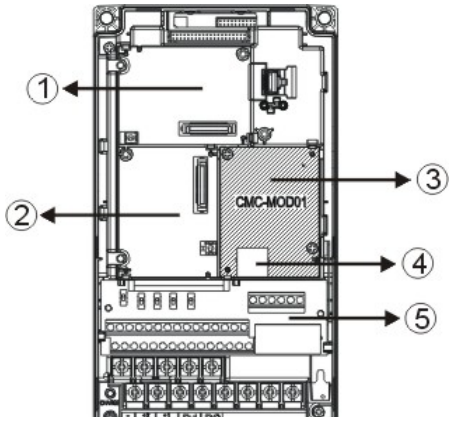

①	I/O CARD & Relay Card
②	PG Card
③	Comm. Card
④	RJ-45 connection port
⑤	Removable control circuit terminal

■ Specifications

Network Interface

Interface	RJ-45 with Auto MDI/MDIX
Number of ports	1 Port
Transmission method	IEEE 802.3, IEEE 802.3u
Transmission cable	Category 5e shielding 100 M
Transmission speed	10/100 Mbps Auto-Detect
Network protocol	ICMP, IP, TCP, UDP, DHCP, HTTP, SMTP, MODBUS OVER TCP/IP, Delta Configuration

Electrical Specification

Power supply voltage	5 VDC (supply by the AC motor drive)
Insulation voltage	500 Vdc
Power consumption	0.8 W
Weight	25 g

Environment

Noise immunity	ESD (IEC 61800-5-1, IEC 61000-4-2) EFT (IEC 61800-5-1, IEC 61000-4-4) Surge Test (IEC 61800-5-1, IEC 61000-4-5) Conducted Susceptibility Test (IEC 61800-5-1, IEC 61000-4-6)
Operation/storage	Operation: -10°C ~ 50°C (temperature), 90% (humidity) Storage: -25°C ~ 70°C (temperature), 95% (humidity)
Vibration/shock immunity	International standard: IEC 61800-5-1, IEC 60068-2-6/IEC 61800-5-1, IEC 60068-2-27

■ Install CMC-MOD01 to VFD-C2000 (690V)

1. Switch off the power supply of VFD-C2000.(690V)
2. Open the front cover of VFD-C2000 (690V).
3. Place the insulation spacer into the positioning pin at Slot 1 (shown in Figure 3), and aim the two holes on the PCB at the positioning pin. Press the pin to clip the holes with the PCB (shown in Figure 4).
4. Screw up at torque 6 ~ 8 kg-cm (5.21 ~ 6.94 in-lbs) after the PCB is clipped with the holes (shown in Figure 5).

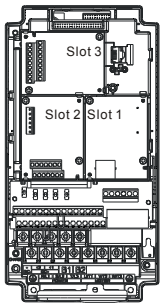

[Figure 3]

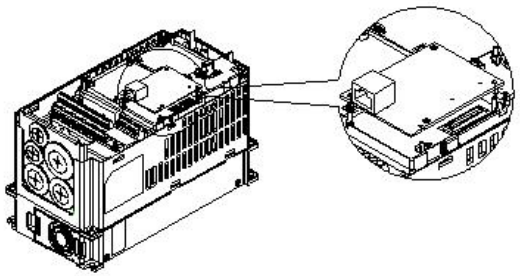

[Figure 4]

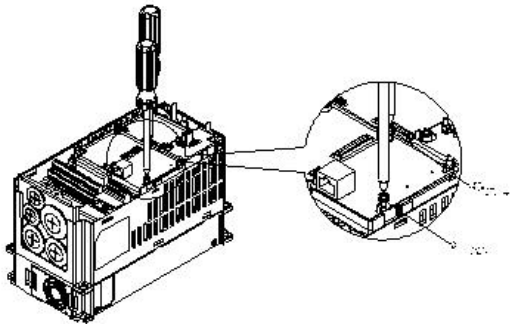

[Figure 5]

■ Communication Parameters for VFD-C2000 (690V) Connected to EtherNet

When VFD-C2000 (690V) is link to EtherNet, please set up the communication parameters base on the table below. EtherNet master will be able to read/write the frequency word and control word of VFD-C2000 (690V) after communication parameters setup.

Parameter	Function	Set value (Dec)	Explanation
P00-20	Source of frequency command setting	8	The frequency command is controlled by communication card.
P00-21	Source of operation command setting	5	The operation command is controlled by communication card.
P09-30	Decoding method for communication	0	Decoding method for Delta AC motor drive
P09-75	IP setting	0	Static IP(0) / Dynamic distribution IP(1)
P09-76	IP address -1	192	IP address 192.168.1.5
P09-77	IP address -2	168	IP address 192.168.1.5
P09-78	IP address -3	1	IP address 192.168.1.5
P09-79	IP address -4	5	IP address 192.168.1.5
P09-80	Netmask -1	255	Netmask 255.255.255.0
P09-81	Netmask -2	255	Netmask 255.255.255.0
P09-82	Netmask -3	255	Netmask 255.255.255.0
P09-83	Netmask -4	0	Netmask 255.255.255.0
P09-84	Default gateway -1	192	Default gateway 192.168.1.1
P09-85	Default gateway -2	168	Default gateway 192.168.1.1
P09-86	Default gateway -3	1	Default gateway 192.168.1.1
P09-87	Default gateway -4	1	Default gateway 192.168.1.1

■ Disconnecting CMC- MOD01 from VFD-C2000 (690V)

1. Switch off the power supply of VFD-C2000 (690V).
2. Remove the two screws (shown in Figure 6).
3. Twist opens the card clip and inserts the slot type screwdriver to the hollow to prize the PCB off the card clip (shown in Figure 7).
4. Twist opens the other card clip to remove the PCB (shown in Figure 8).

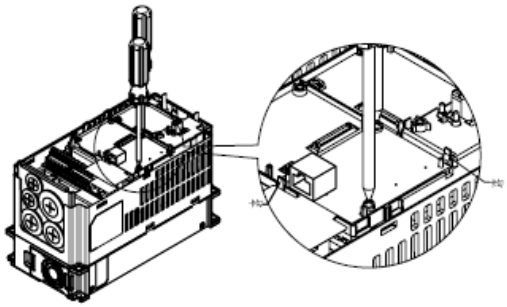

[Figure 6]

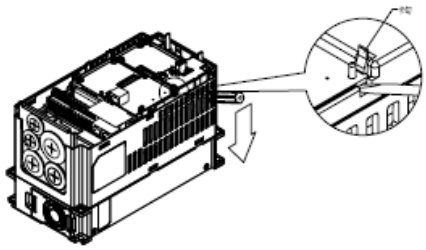

[Figure 7]

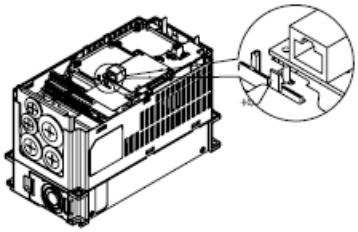

[Figure 8]

■ Basic Registers

BR#	R/W	Content	Explanation
#0	R	Model name	Set up by the system; read only. The model code of CMC-MOD01=H'0203
#1	R	Firmware version	Displaying the current firmware version in hex, e.g. H'0100 indicates the firmware version V1.00.
#2	R	Release date of the version	Displaying the data in decimal form. 10,000s digit and 1,000s digit are for "month"; 100s digit and 10s digit are for "day". For 1 digit: 0 = morning; 1 = afternoon.
#11	R/W	Modbus Timeout	Pre-defined setting: 500 (ms)
#13	R/W	Keep Alive Time	Pre-defined setting: 30 (s)

■ LED Indicator & Troubleshooting

LED Indicators

LED	Status		Indication	How to correct it?
POWER	Green	On	Power supply in normal status	--
		Off	No power supply	Check the power supply
LINK	Green	On	Network connection in normal status	--
		Flashes	Network in operation	--
		Off	Network not connected	Check if the network cable is connected

Troubleshooting

Abnormality	Cause	How to correct it?
POWER LED off	AC motor drive not powered	Check if AC motor drive is powered, and if the power supply is normal.
	CMC-MOD01 not connected to AC motor drive	Make sure CMC-MOD01 is connected to AC motor drive.
LINK LED off	CMC-MOD01 not connected to network	Make sure the network cable is correctly connected to network.
	Poor contact to RJ-45 connector	Make sure RJ-45 connector is connected to EtherNet port.
No module found	CMC-MOD01 not connected to network	Make sure CMC-MOD01 is connected to network.
	PC and CMC-MOD01 in different networks and blocked by network firewall.	Search by IP or set up relevant settings by AC motor drive keypad.
Fail to open CMC-MOD01 setup page	CMC-MOD01 not connected to network	Make sure CMC-MOD01 is connected to the network.
	Incorrect communication setting in DCISoft	Make sure the communication setting in DCISoft is set to EtherNet.
	PC and CMC-MOD01 in different networks and blocked by network firewall.	Conduct the setup by AC motor drive keypad.
Able to open CMC-MOD01 setup page but fail to utilize webpage monitoring	Incorrect network setting in CMC-MOD01	Check if the network setting for CMC-MOD01 is correct. For the Intranet setting in your company, please consult your IT staff. For the Internet setting in your home, please refer to the network setting instruction provided by your ISP.
Fail to send e-mail	Incorrect network setting in CMC-MOD01	Check if the network setting for CMC-MOD01 is correct.
	Incorrect mail server setting	Please confirm the IP address for SMTP-Server.

8-8 CMC-PD01

■ Features

1. Supports PZD control data exchange.
2. Supports PKW polling AC motor drive parameters.
3. Supports user diagnosis function.
4. Auto-detects baud rates; supports Max. 12Mbps.

■ Product Profile

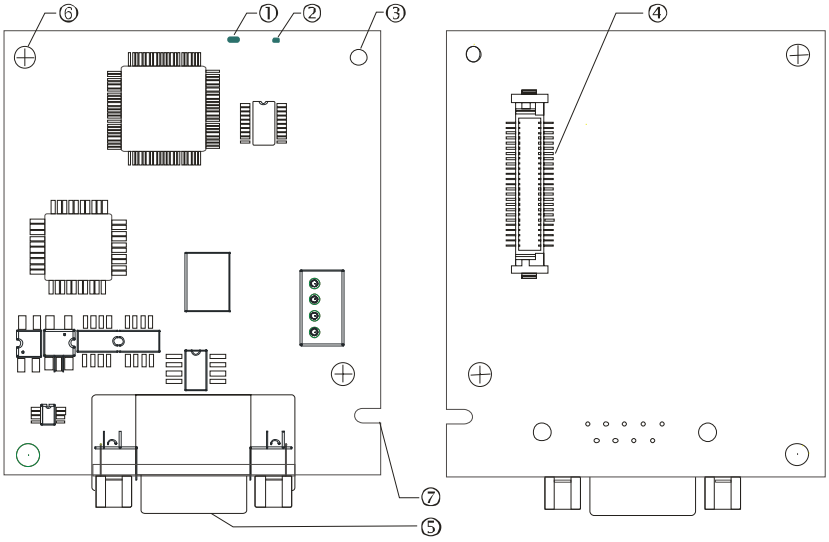

1. NET indicator
2. POWER indicator
3. Positioning hole
4. AC motor drive connection port
5. PROFIBUS DP connection port
6. Screw fixing hole
7. Fool-proof groove

■ Specifications

PROFIBUS DP Connector

Interface	DB9 connector
Transmission method	High-speed RS-485
Transmission cable	Shielded twisted pair cable
Electrical isolation	500 VDC

Communication

Message type	Cyclic data exchange
Module name	CMC-PD01
GSD document	DELA08DB.GSD
Company ID	08DB (HEX)
Serial transmission speed supported (auto-detection)	9.6 kbps; 19.2 kbps; 93.75 kbps; 187.5 kbps; 125 kbps; 250 kbps; 500 kbps; 1.5 Mbps; 3 Mbps; 6 Mbps; 12 Mbps (bit per second)

Electrical Specification

Power supply	5 VDC (supplied by AC motor drive)
Insulation voltage	500 VDC
Power consumption	1 W
Weight	28 g

Environment

Noise immunity	ESD (IEC 61800-5-1, IEC 6100-4-2) EFT (IEC 61800-5-1, IEC 6100-4-4) Surge Teat (IEC 61800-5-1, IEC 6100-4-5) Conducted Susceptibility Test (IEC 61800-5-1, IEC 6100-4-6)
Operation /storage	Operation: -10ºC ~ 50ºC (temperature), 90% (humidity) Storage: -25ºC ~ 70ºC (temperature), 95% (humidity)
Shock / vibration resistance	International standards: IEC 61131-2, IEC 68-2-6 (TEST Fc)/ IEC 61131-2 & IEC 68-2-27 (TEST Ea)

■ Installation

PROFIBUS DP Connector

PIN	PIN name	Definition
1	-	Not defined
2	-	Not defined
3	Rxd/Txd-P	Sending/receiving data P(B)
4	-	Not defined
5	DGND	Data reference ground
6	VP	Power voltage – positive
7	-	Not defined
8	Rxd/Txd-N	Sending/receiving data N(A)
9	-	Not defined

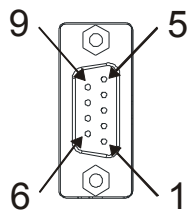

■ LED Indicator & Troubleshooting

There are 2 LED indicators on CMC-PD01. POWER LED displays the status of the working power. NET LED displays the connection status of the communication.

POWER LED

LED status	Indication	How to correct it?
Green light on	Power supply in normal status.	--
Off	No power	Check if the connection between CMC-PD01 and AC motor drive is normal.

NET LED

LED status	Indication	How to correct it?
Green light on	Normal status	--
Red light on	CMC-PD01 is not connected to PROFIBUS DP bus.	Connect CMC-PD01 to PROFIBUS DP bus.
Red light flashes	Invalid PROFIBUS communication address	Set the PROFIBUS address of CMC-PD01 between 1 ~ 125 (decimal)
Orange light flashes	CMC-PD01 fails to communication with AC motor drive.	Switch off the power and check whether CMC-PD01 is correctly and normally connected to AC motor drive.

8-9 CMC-DN01

■ Functions

1. Based on the high-speed communication interface of Delta HSSP protocol, able to conduct immediate control to AC motor drive.
2. Supports Group 2 only connection and polling I/O data exchange.
3. For I/O mapping, supports Max. 32 words of input and 32 words of output.
4. Supports EDS file configuration in DeviceNet configuration software.
5. Supports all baud rates on DeviceNet bus: 125 kbps, 250 kbps, 500 kbps and extendable serial transmission speed mode.
6. Node address and serial transmission speed can be set up on AC motor drive.
7. Power supplied from AC motor drive.

■ Product Profile

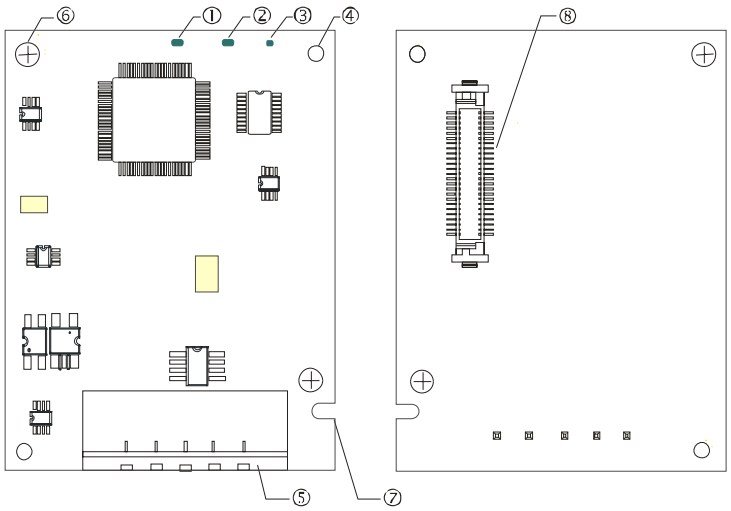

1. NS indicator
2. MS indicator
3. POWER indicator
4. Positioning hole
5. DeviceNet connection port
6. Screw fixing hole
7. Fool-proof groove
8. AC motor drive connection port

■ Specifications

DeviceNet Connector

Interface	5-PIN open removable connector. Of 5.08mm PIN interval
Transmission	CAN
Transmission cable	Shielded twisted pair cable (with 2 power cables)
Transmission speed	125 kbps, 250 kbps, 500 kbps and extendable serial transmission speed mode
Network protocol	DeviceNet protocol

AC Motor Drive Connection Port

Interface	50 PIN communication terminal
Transmission method	SPI communication
Terminal function	1. Communicating with AC motor drive 2. Transmitting power supply from AC motor drive
Communication	Delta HSSP protocol

Electrical Specification

Power supply voltage	5 VDC (supplied by AC motor drive)
Insulation voltage	500 VDC
Communication wire power consumption	0.85 W
Power consumption	1 W
Weight	23 g

Environment

Noise immunity	ESD (IEC 61800-5-1, IEC 6100-4-2) EFT (IEC 61800-5-1, IEC 6100-4-4) Surge Teat (IEC 61800-5-1, IEC 6100-4-5) Conducted Susceptibility Test (IEC 61800-5-1, IEC 6100-4-6)
Operation /storage	Operation: -10ºC ~ 50ºC (temperature), 90% (humidity) Storage: -25ºC ~ 70ºC (temperature), 95% (humidity)
Shock / vibration resistance	International standards: IEC 61800-5-1, IEC 60068-2-6 / IEC 61800-5-1, IEC 60068-2-27

DeviceNet Connector

PIN	Signal	Color	Definition
1	V+	Red	DC24V
2	H	White	Signal+
3	S	-	Earth
4	L	Blue	Signal-
5	V-	Black	0V

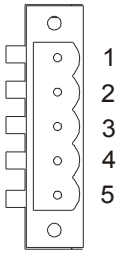

■ LED Indicator & Troubleshooting

There are 3 LED indicators on CMC-DN01. POWER LED displays the status of power supply. MS LED and NS LED are dual-color LED, displaying the connection status of the communication and error messages.

POWER LED

LED status	Indication	How to correct it?
On	Power supply in abnormal status.	Check the power supply of CMC-DN01.
Off	Power supply in normal status	--

NS LED

LED status	Indication	How to correct it?
Off	No power supply or CMC-DN01 has not completed MAC ID test yet.	1. Check the power of CMC-DN01 and see if the connection is normal. 2. Make sure at least one or more nodes are on the bus. 3. Check if the serial transmission speed of CMC-DN01 is the same as that of other nodes.
Green light flashes	CMC-DN01 is on-line but has not established connection to the master.	1. Configure CMC-DN01 to the scan list of the master. 2. Re-download the configured data to the master.
Green light on	CMC-DN01 is on-line and is normally connected to the master	--
Red light flashes	CMC-DN01 is on-line, but I/O connection is timed-out.	1. Check if the network connection is normal. 2. Check if the master operates normally.
Red light on	1. The communication is down. 2. MAC ID test failure. 3. No network power supply. 4. CMC-DN01 is off-line.	1. Make sure all the MAC IDs on the network are not repeated. 2. Check if the network installation is normal. 3. Check if the baud rate of CMC-DN01 is consistent with that of other nodes. 4. Check if the node address of CMC-DN01 is illegal. 5. Check if the network power supply is normal.

MS LED

LED status	Indication	How to correct it?
Off	No power supply or being off-line	Check the power supply of CMC-DN01 and see of the connection is normal.
Green light flashes	Waiting for I/O data	Switch the master PLC to RUN status
Green light on	I/O data are normal	--
Red light flashes	Mapping error	1. Reconfigure CMC-DN01 2. Re-power AC motor drive
Red light on	Hardware error	1. See the error code displayed on AC motor drive. 2. Send back to the factory for repair if necessary.
Orange light flashes	CMC-DN01 is establishing connection with AC motor drive.	If the flashing lasts for a long time, check if CMC-DN01 and AC motor drive are correctly installed and normally connected to each other.

8-10 CMC-EIP01

■ Features

1. Supports Modbus TCP and EtherNet/IP protocol
2. MDI/MDI-X auto-detect
3. Baud rate: 10/100 Mbps auto-detect
4. AC motor drive keypad/EtherNet configuration
5. Virtual serial port

■ Product Profile

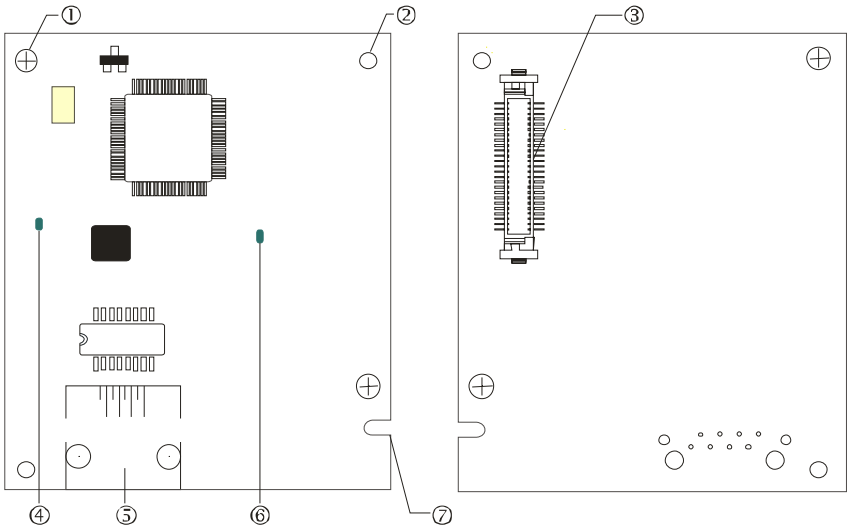

[Figure1]

1. Screw fixing hole
2. Positioning hole
3. AC motor drive connection port
4. LINK indicator
5. RJ-45 connection port
6. POWER indicator
7. Fool-proof groove

■ Specifications

Network Interface

Interface	RJ-45 with Auto MDI/MDIX
Number of ports	1 Port
Transmission method	IEEE 802.3, IEEE 802.3u
Transmission cable	Category 5e shielding 100 M
Transmission speed	10/100 Mbps Auto-Detect
Network protocol	ICMP, IP, TCP, UDP, DHCP, HTTP, SMTP, MODBUS OVER TCP/ IP, EtherNet/ IP, Delta Configuration

Electrical Specification

Weight	25 g
Insulation voltage	500 VDC
Power consumption	0.8 W
Power supply voltage	5 VDC

Environment

Noise immunity	ESD (IEC 61800-5-1, IEC 61000-4-2) EFT (IEC 61800-5-1, IEC 61000-4-4) Surge Test (IEC 61800-5-1, IEC 61000-4-5) Conducted Susceptibility Test (IEC 61800-5-1, IEC 61000-4-6)
Operation/storage	Operation: -10°C ~ 50°C (temperature), 90% (humidity) Storage: -25°C ~ 70°C (temperature), 95% (humidity)
Vibration/shock immunity	International standard: IEC 61800-5-1, IEC 60068-2-6/ IEC 61800-5-1, IEC 60068-2-27

■ Installation

Connecting CMC-EIP01 to Network

1. Turn off the power of AC motor drive.
2. Open the cover of AC motor drive.
3. Connect CAT-5e network cable to RJ-45 port on CMC-EIP01 (See Figure 2).

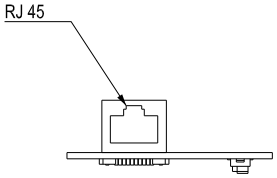

[Figure 2]

RJ-45 PIN Definition

PIN	Signal	Definition
1	Tx+	Positive pole for data transmission
2	Tx-	Negative pole for data transmission
3	Rx+	Positive pole for data receiving
4	--	N/C

PIN	Signal	Definition
5	--	N/C
6	Rx-	Negative pole for data receiving
7	--	N/C
8	--	N/C

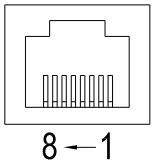

■ Connecting CMC-EIP01 to VFD-C2000 (690V)

1. Switch off the power of AC motor drive.
2. Open the front cover of AC motor drive.
3. Place the insulation spacer into the positioning pin at Slot 1 (shown in Figure 3), and aim the two holes on the PCB at the positioning pin. Press the pin to clip the holes with the PCB (see Figure 4).
4. Screw up at torque 6 ~ 8 kg-cm (5.21 ~ 6.94 in-lbs) [0.59~0.78 Nm] after the PCB is clipped with the holes (see Figure 5).

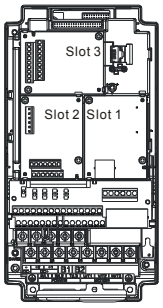

[Figure 3]

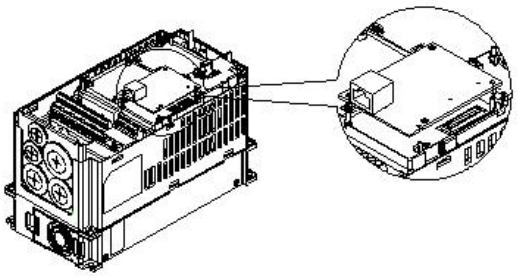

[Figure 4]

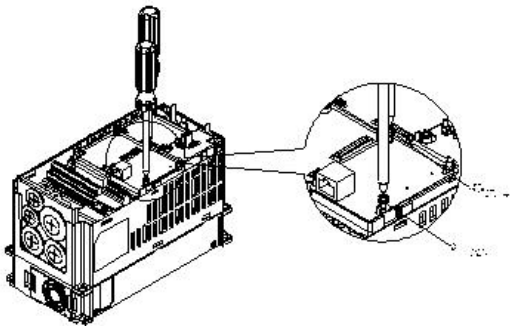

[Figure 5]

■ Communication Parameters for VFD-C2000 (690V) Connected to EtherNet

When VFD-C2000(690V) is connected to EtherNet network, please set up the communication parameters for it according to the table below. The EtherNet master is only able to read/write the frequency word and control word of VFD-C2000(690V) after the communication parameters are set.

Parameter	Function	Set value (Dec)	Explanation
P00-20	Source of frequency command setting	8	The frequency command is controlled by communication card.
P00-21	Source of operation command setting	5	The operation command is controlled by communication card.
P09-30	Decoding method for communication	0	The decoding method for Delta AC motor drive
P09-75	IP setting	0	Static IP(0) / Dynamic distribution IP(1)
P09-76	IP address -1	192	IP address 192.168.1.5
P09-77	IP address -2	168	IP address 192.168.1.5
P09-78	IP address -3	1	IP address 192.168.1.5
P09-79	IP address -4	5	IP address 192.168.1.5
P09-80	Netmask -1	255	Netmask 255.255.255.0
P09-81	Netmask -2	255	Netmask 255.255.255.0
P09-82	Netmask -3	255	Netmask 255.255.255.0
P09-83	Netmask -4	0	Netmask 255.255.255.0
P09-84	Default gateway -1	192	Default gateway 192.168.1.1
P09-85	Default gateway -2	168	Default gateway 192.168.1.1
P09-86	Default gateway -3	1	Default gateway 192.168.1.1
P09-87	Default gateway -4	1	Default gateway 192.168.1.1

■ Disconnecting CMC- EIP01 from VFD-C2000 (690V)

1. Switch off the power supply of VFD-C2000(690V).
2. Remove the two screws (see Figure 6).
3. Twist opens the card clip and inserts the slot type screwdriver to the hollow to prize the PCB off the card clip (see Figure 7).
4. Twist opens the other card clip to remove the PCB (see Figure 8).

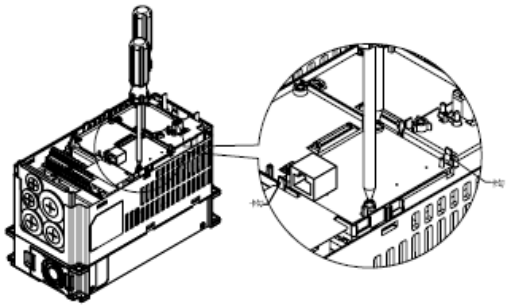

[Figure 6]

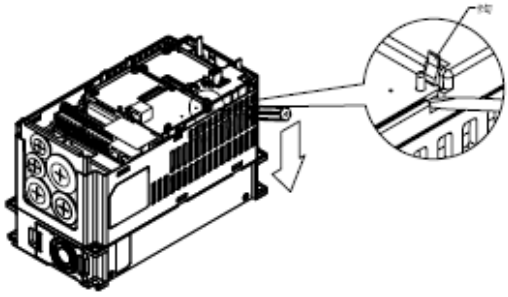

[Figure 7]

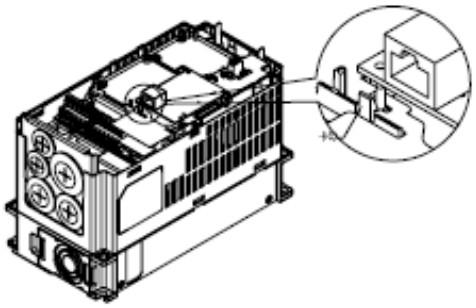

[Figure 8]

- **LED Indicator & Troubleshooting**

There are 2 LED indicators on CMC-EIP01. The POWER LED displays the status of power supply, and the LINK LED displays the connection status of the communication.

LED Indicators

LED	Status		Indication	How to correct it?
POWER	Green	On	Power supply in normal status	--
		Off	No power supply	Check the power supply.
LINK	Green	On	Network connection in normal status	--
		Flashes	Network in operation	--
		Off	Network not connected	Check if the network cable is connected.

Troubleshooting

Abnormality	Cause	How to correct it?
POWER LED off	AC motor drive not powered	Check if AC motor drive is powered, and if the power supply is normal.
	CMC-EIP01 not connected to AC motor drive	Make sure CMC-EIP01 is connected to AC motor drive.
LINK LED off	CMC-EIP01 not connected to network	Make sure the network cable is correctly connected to network.
	Poor contact to RJ-45 connector	Make sure RJ-45 connector is connected to EtherNet port.
No communication card found	CMC-EIP01 not connected to network	Make sure CMC-EIP01 is connected to network.
	PC and CMC-EIP01 in different networks and blocked by network firewall.	Search by IP or set up relevant settings by AC motor drive keypad.

Abnormality	Cause	How to correct it?
Fail to open CMC-EIP01 setup page	CMC-EIP01 not connected to network	Make sure CMC-EIP01 is connected to the network.
	Incorrect communication setting in DCISoft	Make sure the communication setting in DCISoft is set to EtherNet.
	PC and CMC-EIP01 in different networks and blocked by network firewall.	Conduct the setup by AC motor drive keypad.
Able to open CMC-EIP01 setup page but fail to utilize webpage monitoring	Incorrect network setting in CMC-EIP01	Check if the network setting for CMC-EIP01 is correct. For the Intranet setting in your company, please consult your IT staff. For the Internet setting in your home, please refer to the network setting instruction provided by your ISP.
Fail to send e-mail	Incorrect network setting in CMC-EIP01	Check if the network setting for CMC-EIP01 is correct.
	Incorrect mail server setting	Please confirm the IP address for SMTP-Server.

8-11 EMC-COP01

■ Position map of terminating resistor

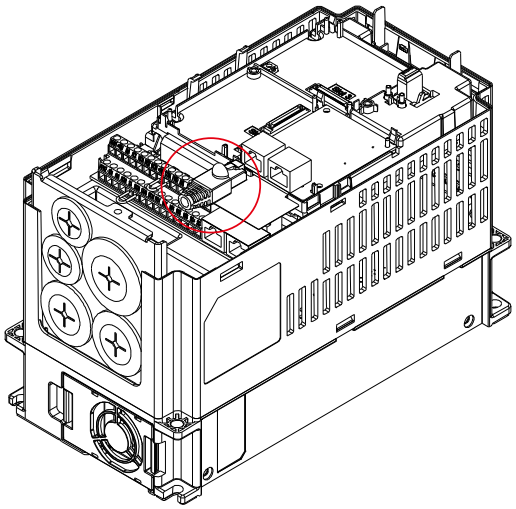

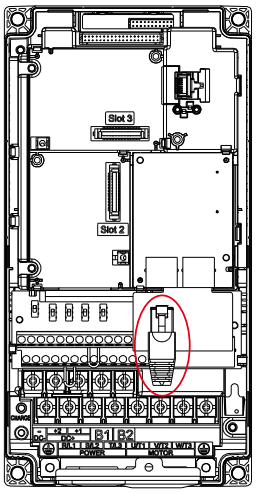

■ RJ-45 Pin definition

RS485 socket

Pin	Pin name	Definition
1	CAN_H	CAN_H bus line (dominant high)
2	CAN_L	CAN_L bus line (dominant low)
3	CAN_GND	Ground/0V/V-
7	CAN_GND	Ground/0V/V-

■ Specifications

Interface	RJ-45
Number of ports	1 Port
Transmission method	CAN
Transmission cable	CAN standard cable
Transmission speed	1Mbps, 500kbps, 250kbps, 125kbps, 100kbps, 50kbs
Communication protocol	CANopen

■ CANopen Communication Cable

Model:

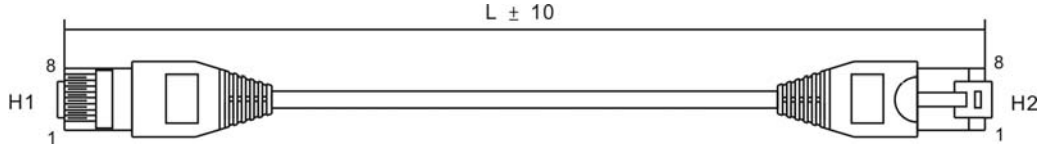

Title	Part No.	L	
		mm	inch
1	UC-CMC003-01A	300	11.8
2	UC-CMC005-01A	500	19.6
3	UC-CMC010-01A	1000	39
4	UC-CMC015-01A	1500	59
5	UC-CMC020-01A	2000	78.7
6	UC-CMC030-01A	3000	118.1
7	UC-CMC050-01A	5000	196.8
8	UC-CMC100-01A	10000	393.7
9	UC-CMC200-01A	20000	787.4

■ CANopen Dimension

Model: TAP-CN03

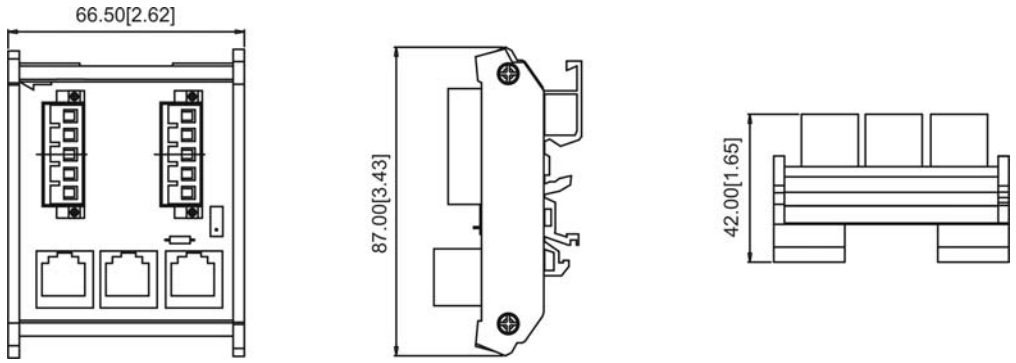

NOTE

For more information on CANopen, please refer to Chapter 15 CANopen Overview.

Chapter 9 Specification

9-1 575V Series

9-2 690V Series

9-3 Environment for Operation, Storage and Transportation

9-4 Specification for Operation Temperature and Protection Level

9-5 Derating of ambient temperature and altitude

9-1 575V Series

Frame			A			B			
Model VFD-_ _ _ C53A-21			015	022	037	055	075	110	150
Output*	Light Duty	Rated Output Capacity (kVA)	3	4.3	6.7	9.9	12.1	18.6	24.1
		Rated Output Current (A)	3	4.3	6.7	9.9	12.1	18.7	24.2
		Applicable Motor Output (kW)	1.5	2.2	3.7	5.5	7.5	11	15
		Applicable Motor Output (HP)	2	3	5	7.5	10	15	20
	Normal Duty	Rated Output Capacity (kVA)	2.5	3.6	5.5	8.2	10	15.4	19.9
		Rated Output Current (A)	2.5	3.6	5.5	8.2	10	15.5	20
		Applicable Motor Output (kW)	0.75	1.5	2.2	3.7	5.5	7.5	11
		Applicable Motor Output (HP)	1	2	3	5	7.5	10	15
	Heavy Duty	Rated Output Capacity (kVA)	2.1	3	4.6	6.9	8.3	12.9	16.7
		Rated Output Current (A)	2.1	3	4.6	6.9	8.3	13	16.8
		Applicable Motor Output (kW)	0.75	1.5	2.2	3.7	3.7	7.5	7.5
		Applicable Motor Output (HP)	1	2	3	5	5	10	10
	Efficiency (%)		97	97	97	98	98	98	98
	Fundamental wave PF		>0.98	>0.98	>0.98	>0.98	>0.98	>0.98	>0.98
	Carrier Frequency (kHz)		2~15 (Default 4 kHz)						
Input	Input current (A) Light duty		3.8	5.4	10.4	14.9	16.9	21.3	26.3
	Input current (A) Normal duty		3.1	4.5	7.2	12.3	15	18	22.8
	Input current (A) Heavy duty		2.6	3.8	5.8	10.7	12.5	16.9	19.7
	Rated Voltage/Frequency		3 Phases AC 525~600 V (-15%~+10%), 50/60 Hz						
	Operating Voltage Range		446~660 Vac						
	Frequency Tolerance		47~63 Hz						
Drive Weight			3 ± 0.3 Kg			4.8 ± 1 Kg			
Cooling method			Natural cooling		Fan cooling				
Braking Chopper			Built-in						
DC reactor			Optional						

9-2 690V Series

Frame			C				D		E				F	
Model VFD-_ _ _ C63B-00/21			185	220	300	370	450	550	750	900	1100	1320	1600	2000
Output*	Light Duty	Rated Output Capacity (kVA)	29	36	43	54	65	80	103	124	149	179	215	263
		Applicable Motor Output (690V, kW)	18.5	22	30	37	45	55	75	90	110	132	160	200
		Applicable Motor Output (690V, HP)	25	30	40	50	60	75	100	125	150	175	215	270
		Applicable Motor Output (575V, HP)	20	25	30	40	50	60	75	100	125	150	150	200
		Rated Output Current (A)	24	30	36	45	54	67	86	104	125	150	180	220
	Normal Duty	Rated Output Capacity (kVA)	24	29	36	43	54	65	80	103	124	149	179	215
		Applicable Motor Output (690V, kW)	15	18.5	22	30	37	45	55	75	90	110	132	160
		Applicable Motor Output (690V, HP)	20	25	30	40	50	60	75	100	125	150	175	215
		Applicable Motor Output (575V, HP)	15	20	25	30	40	50	60	75	100	125	150	150
		Rated Output Current (A)	20	24	30	36	45	54	67	86	104	125	150	180
	Heavy Duty	Rated Output Capacity (kVA)	17	24	29	36	43	54	65	80	103	124	149	179
		Applicable Motor Output (690V, kW)	11	15	18.5	22	30	37	45	55	75	90	110	132
		Applicable Motor Output (690V, HP)	15	20	25	30	40	50	60	75	100	125	150	175
		Applicable Motor Output (575V, HP)	10	15	20	25	30	40	50	60	75	100	125	150
		Rated Output Current (A)	14	20	24	30	36	45	54	67	86	104	125	150
	Efficiency (%)		97	97	97	97	97	97	97	97	97	97	97	97
	Fundamental wave PF		>0.98	>0.98	>0.98	>0.98	>0.98	>0.98	>0.98	>0.98	>0.98	>0.98	>0.98	>0.98
	Carrier Frequency (kHz)		2~9 (Default 4 kHz)											
Input	Input current (A) Light duty		29	36	43	54	65	81	84	102	122	147	178	217
	Input current (A) Normal duty		24	29	36	43	54	65	66	84	102	122	148	178
	Input current (A) Heavy duty		20	24	29	36	43	54	53	66	84	102	123	148
	Rated Voltage/Frequency		3 phases AC 525 V~690 V (-15%~+10%), 50/60 Hz											
	Operating Voltage Range		446~759 Vac											
	Frequency Tolerance		47~63 Hz											
Drive Weight			10 ± 1.5 Kg				39 ± 1.5 Kg		61 ± 1.5 Kg				88 ± 1.5 Kg	
Cooling method			Fan cooling											
Braking Chopper			Built-in				Optional							
DC reactor			Optional				Built-in							

Frame			G		H			
Model VFD-_ _ _ C63B-00/21			2500	3150	4000	4500	5600	6300
Output*	Light Duty	Rated Output Capacity (kVA)	347	418	494.5	534.7	678.5	776
		Applicable Motor Output (690V, kW)	250	315	400	450	560	630
		Applicable Motor Output (690V, HP)	335	425	530	600	745	850
		Applicable Motor Output (575V, HP)	250	350	400	450	500	675
		Rated Output Current (A)	290	350	430	465	590	675
	Normal Duty	Rated Output Capacity (kVA)	239	347	402.5	442.7	534.7	776
		Applicable Motor Output (690V, kW)	200	250	315	355	450	630
		Applicable Motor Output (690V, HP)	270	335	425	475	600	850
		Applicable Motor Output (575V, HP)	200	250	350	400	450	500
		Rated Output Current (A)	220	290	350	385	465	675
	Heavy Duty	Rated Output Capacity (kVA)	215	263	333.5	356.5	483	776
		Applicable Motor Output (690V, kW)	160	200	250	280	400	630
		Applicable Motor Output (690V, HP)	215	270	335	375	530	850
		Applicable Motor Output (575V, HP)	150	200	250	350	450	500
		Rated Output Current (A)	180	220	290	310	420	675
	Efficiency (%)		98	98	98	98	98	98
	Fundamental wave PF		>0.98	>0.98	>0.98	>0.98	>0.98	>0.98
	Carrier Frequency (kHz)		2~9 (Default 4kHz)					2~9 (Default 3kHz)
Input	Input current (A) Light duty		292	353	454	469	595	681
	Input current (A) Normal duty		222	292	353	388	504	681
	Input current (A) Heavy duty		181	222	292	313	423	681
	Rated Voltage/Frequency		3 phases AC 525 V~690 V (-15%~+10%), 50/60 Hz					
	Operating Voltage Range		446~759 Vac					
	Frequency Tolerance		47~63 Hz					
Drive Weight			135 ± 4 Kg		243 ± 5 Kg			
Cooling method			Fan cooling					
Braking Chopper			Optional					
DC reactor			Built-in					

NOTE

* Three different duties can be selected in Pr. 00-16: Light duty, normal duty, and heavy duty. The default setting is light duty.

General Specifications

Control Characteristics	Control Method	LD/ ND/ HD: 1: V/F 2: V/F+PG 3: SVC
	Starting Torque	Reach up to 150% or above at 0.5 Hz
	V/F Curve	4 point adjustable V/F curve and square curve
	Speed Response Ability	5 Hz (vector control can reach up to 40 Hz)
	Torque Limit	Max. of 200% torque current
	Torque Accuracy	± 5%
	Max. Output Frequency (Hz)	Light duty and normal duty: 0.01~599.00 Hz; Heavy duty: 0.00 ~ 300.00 Hz
	Frequency Output Accuracy	Digital command: ± 0.01%, -10°C ~+40°C; Analog command: ± 0.1%, 25 ± 10°C
	Output Frequency Resolution	Digital command: 0.01 Hz, Analog command: 0.03 X max. output frequency/60 Hz (±11 bit)
	Overload Tolerance	Light duty: 120% of rated current can endure for 1 minute Normal duty: 120% of rated current can endure for 1 minute 160% of rated current can endure for 3 seconds d Heavy duty: 150% of rated current can endure for1 minute during every 5 minutes 180% of rated current can endure for 3 seconds during every 30 seconds.
	Frequency Setting Signal	+10 V~-10, 0~+10 V, 4~20 mA, 0~20 mA, Pulse input
	Accel. / decel. Time	0.00~600.00/0.0~6000.0 seconds
	Main control function	Momentary power loss ride thru, Speed search, Over-torque detection, 16-step speed (max), Accel/decel time switch, S-curve accel/decel, 3-wire sequence, Auto-Tuning (rotational, stationary), Dwell, Slip compensation, Torque compensation, JOG frequency, Frequency upper/lower limit settings, DC injection braking at start/stop, High slip braking, PID control (with sleep function),Energy saving control, MODOBUS communication (RS-485 RJ45, max. 115.2 kbps), Fault restart, Parameter copy
	Fan Control	PWM control
Protection Characteristics	Motor Protection	Electronic thermal relay protection
	Over-current Protection	For drive model 230 V and 440 V Over-current protection for 225% rated normal duty current current clamp 『Light duty: 128~141%』;『Normal duty: 170~175%』;『Heavy duty: 202~210%』
	Over-voltage Protection	Drive will stop when DC-BUS voltage exceeds 1189 V
	Over-temperature Protection	Built-in temperature sensor
	Stall Prevention	Stall prevention during acceleration, deceleration and running independently
	Restart After Instantaneous Power Failure	Parameter setting up to 20 seconds
	Grounding Leakage Current Protection	Leakage current is higher than 50% of rated current of the AC motor drive
Certifications		GB/T12668-2

9-3 Environment for Operation, Storage and Transportation

DO NOT expose the AC motor drive in the bad environment, such as dust, direct sunlight, corrosive/inflammable gasses, humidity, liquid and vibration environment. The salt in the air must be less than 0.01 mg/cm^2 every year.			
Environment	Installation location	IEC 60364-1/IEC 60664-1 Pollution degree 2, Indoor use only	
	Surrounding Temperature	Storage	-25 °C ~ +70 °C
		Transportation	-25 °C ~ +70 °C
		Non-condensation, non-frozen	
	Rated Humidity	Operation	Max. 90%
		Storage/ Transportation	Max. 95%
		No condense water	
	Air Pressure	Operation/ Storage	86 to 106 kPa
		Transportation	70 to 106 kPa
	Pollution Level	IEC60721-3-3	
		Operation	Class 3C2; Class 3S2
		Storage	Class 1C2; Class 1S2
		Transportation	Class 2C2; Class 2S2
		If the AC motor drive is to be used under harsh environment with high level of contamination (e.g. dew, water, dust), make sure it is installed in an environment qualified for IP54 such as in a cabinet.	
	Altitude	Operation	If AC motor drive is installed at altitude 0~1000 m, follow normal operation restriction. If it is install at altitude 1000~2000 m, decrease 1% of rated current or lower 0.5°C of temperature for every 100m increase in altitude. Maximum altitude for Corner Grounded is 2000m. If use at 2000 meters above sea level, please consult Delta Electronics, Inc.
Package Drop	Storage	ISTA procedure 1A (according to weight) IEC 60068-2-31	
	Transportation		
Vibration	1.0 mm, peak to peak value range from 2 Hz to 13.2 Hz; 0.7 G~1.0 G range from 13.2 Hz to 55 Hz; 1.0G range from 55 Hz to 512 Hz. Comply with IEC 60068-2-6		
Impact	IEC/EN 60068-2-27		
Installed Position	Installed vertically. Max. allowed offset angle ±10° (under normal installation position)	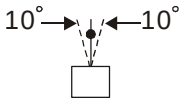	

9-4 Specification for Operation Temperature and Protection Level

Model	Frame	Top cover	Conduit Box	Protection Level	Operation Temperature	Carrier Frequency
VFDxxxC53A-21 VFDxxxC63B-21	Frame A~C 1.5~37 kW	Top cover removed	Standard conduit plate	IP20/ UL Open Type	-10°C~50°C	4k
		Standard with top cover		IP20/ UL Type1/ NEMA1	-10°C~40°C	4k
VFDxxxC63B-21	Frame D ~H 45 kW and above	N/A	Standard conduit plate	IP20/ UL Type1/ NEMA1	-10°C~40°C	45~560 kW: 4K 630 kW: 3K
VFDxxxC63B-00	Frame D~H 45 kW and above	N/A	No conduit box	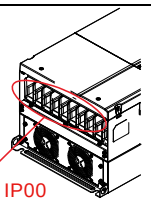	-10°C~50°C	45~560 kW: 4K 630 kW: 3K

NOTE **HD**= Heavy duty; **ND**= Normal duty; **LD** = Light duty

Efficiency Chart

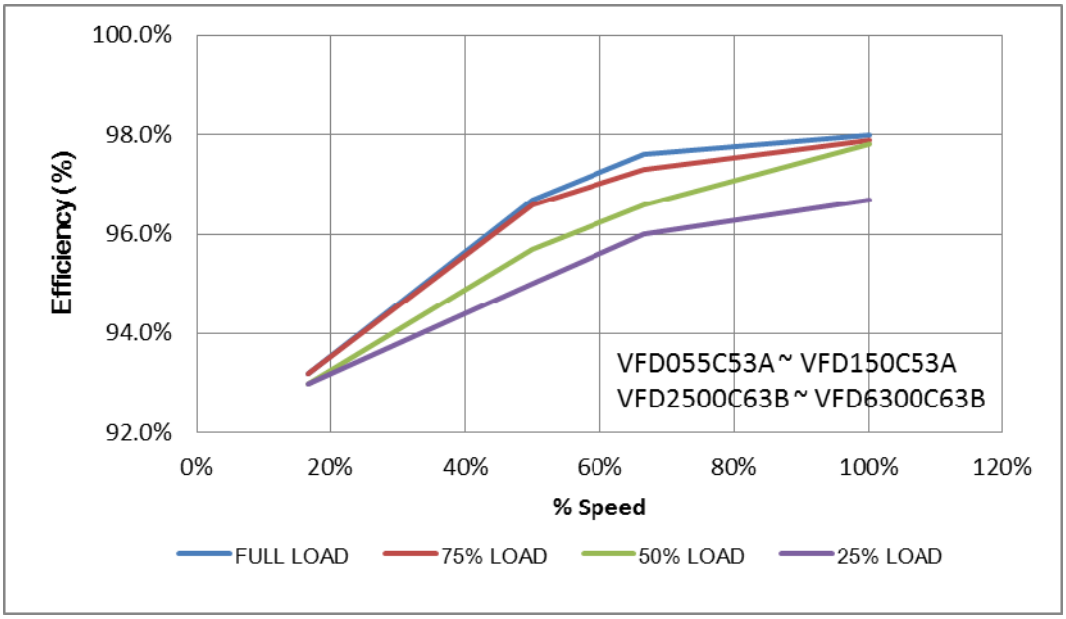

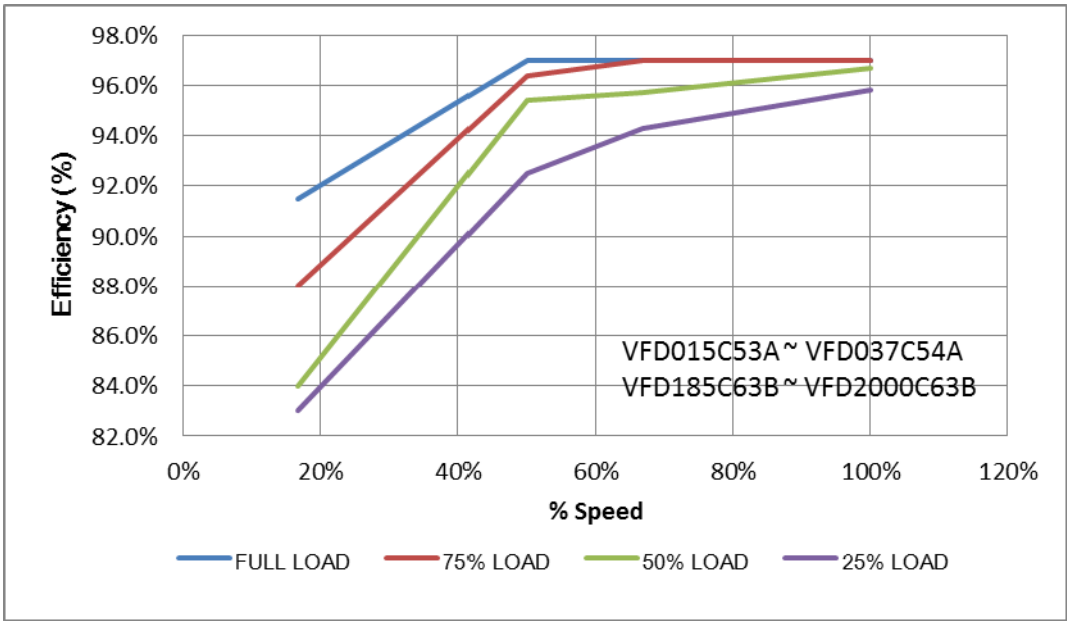

9-5 Derating of ambient temperature and altitude

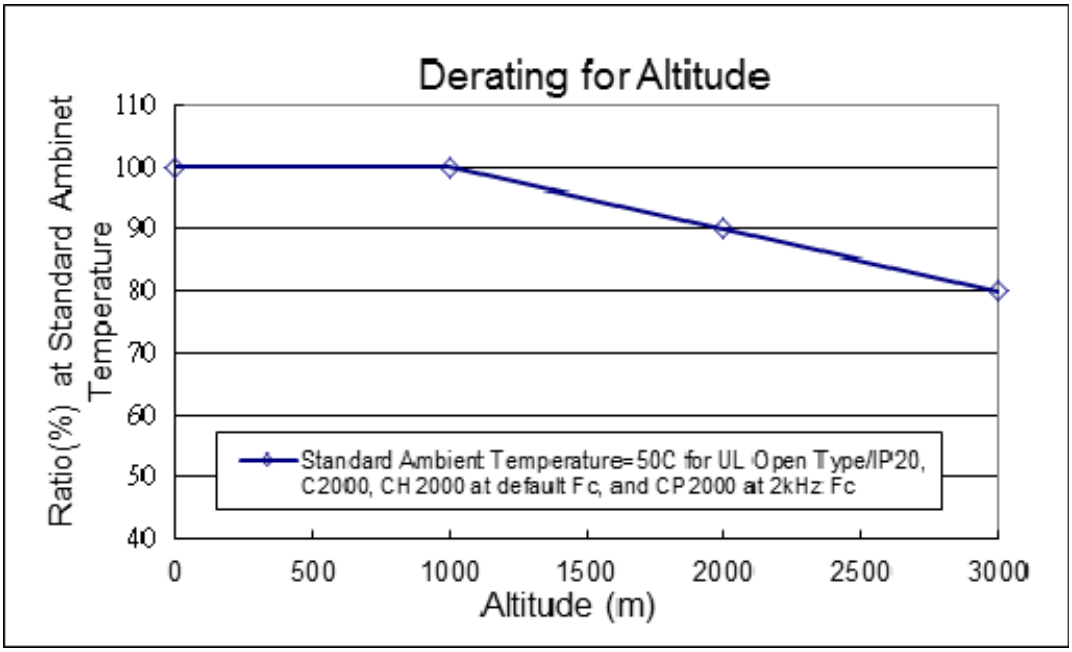

Operating altitude above sea level	Current derating at ambient temperature (inlet air temperature)				
m	30°C 20°C	35°C 25°C	40°C 30°C	45°C 35°C	50°C 40°C
0-1000					
1001-1500					95%
1501-2000					90%
2001-2500				95%	85%
2501-3000				90%	80%
3001-3500			95%	85%	75%
3501-4000			90%	80%	70%
4001-4500		95%	85%	75%	65%
4501-5000		90%	80%	70%	60%

Operating Conditions	Limitations of Ambient Temperature
UL Type I / IP20	When the AC motor drive is operating at the rated current and the ambient temperature has to be between -10°C ~ +40°C. When the temperature is over 40°C, for every increase by 1°C, decrease 2% of the rated current. The maximum allowable temperature is 60°C.
UL Open Type / IP20	When the AC motor drive is operating at the rated current and the ambient temperature has to be between -10°C ~ +50°C. When the temperature is over 50°C, for every increase by 1°C, decrease 2% of the rated current. The maximum allowable temperature is 60°C.
High Altitude	If AC motor drive is installed at altitude 0~1000 m, follow normal operation restriction. If it is installed at altitude 1000~2000 m, decrease 1% of rated current or lower 0.5°C of temperature for every 100 m increase in altitude. Maximum altitude for Corner Grounded is 2000 m. If use at 2000 meters above sea level, please consult Delta Electronics, Inc.

[The page intentionally left blank]

Chapter 10 Digital Keypad

10-1 Descriptions of Digital Keypad

10-2 Function of Digital Keypad KPC-CC01

10-3 TPEditor Installation Instruction

10-4 Fault Code Description of Digital Keypad KPC-CC01

10-5 Functions which are not supported when using TPEditor with KPC-CC01

10-1 Descriptions of Digital Keypad

KPC-CC01

KPC-CE01(Option)

Communication Interface
RJ-45 (socket)、RS-485 interface;

Installation Method
1. Embedded type and can be put flat on the surface of the control box. The front cover is water proof.
2. Buy a MKC-KPPK model to do wall mounting or embedded mounting. Its protection level is IP66.
3. The maximum RJ45 extension lead is 5 m (16ft)
4. This keypad can only be used on Delta's motor drive C2000, CH2000 and CP2000.

Descriptions of Keypad Functions

Key	Descriptions
RUN	Start Operation Key 1. It is only valid when the source of operation command is from the keypad. 2. It can operate the AC motor drive by the function setting and the RUN LED will be ON. 3. It can be pressed again and again at stop process.
STOP RESET	Stop Command Key. This key has the highest processing priority in any situation. 1. When it receives STOP command, no matter the AC motor drive is in operation or stop status, the AC motor drive needs to execute "STOP" command. 2. The RESET key can be used to reset the drive after the fault occurs. 3. The resons why the error cannot be reset: a. Becsuae the condition which triggers the fault is not cleared. When the condition is cleared, the fault can be reset. b. Because it's the fault status checking when power-on. When the condition is cleared, repower again, and the fault can be reset.
FWD REV	Operation Direction Key 1. This key is only control the operation direction NOT for activate the drive. FWD: forward, REV: reverse. 2. Refer to the LED descriptions for more details.
ENTER	ENTER Key Press ENTER and go to the next level. If it is the last level then press ENTER to execute the command.
ESC	ESC Key ESC key function is to leave current menu and return to the last menu. It is also functioned as a return key or cancel key in the sub-menu.
MENU	Press menu to return to main menu. Menu content: KPC-CE01 does not support function 5 ~13. 1. Parameter setup 7. Quick start 13. PC Link 2. Copy Parameter 8. Display Setup 3. Keypad Locked 9. Time Setup 4. PLC Function 10. Language Setup 5. Copy PLC 11. Startup Menu 6. Fault Record 12. Main Page
^ < > v	Direction: Left / Right / Up / Down 1. In the numeric value setting mode, it is used to move the cursor and change the numeric value. 2. In the menu/text selection mode, it is used for item selection.

Key	Descriptions
F1 F2 F3 F4	Function Key 1. The functions keys have factory settings and can be defined by users. The factory settings of F1 and F4 work with the function list below. For example, F1 is JOG function, F4 is a speed setting key for adding/deleting user defined parameters. 2. Other functions must be defined by TPEditor first (please use version 1.40 or above). TPEditor software can be downloaded at: http://www.deltaww.com/services/DownloadCenter2.aspx?secID=8&pid=2&tid=0&CID=06&itemID=060302&typeID=1&downloadID=,&title=-- Select Product Series --&dataType=8;&check=1&hl=en-US Please refer to instruction for TPEditor in Chapter 10-3.
HAND	HAND ON Key 1. This key is executed by the parameter settings of the source of Hand frequency and hand operation. The factory settings of both source of Hand frequency and hand operation are the digital keypad. 2. Press HAND ON key at stop status, the setting will switch to hand frequency source and hand operation source. Press HAND ON key at operation status, it stops the AC motor drive first (display AHSP warning), and switch to hand frequency source and hand operation source. 3. Successful mode switching for KPC-CE01, “HAND” LED will be on; for KPC-CC01, it will display HAND mode on the screen.
AUTO	1. This key is executed by the parameter settings of the source of AUTO frequency and AUTO operation. The factory setting is the external terminal (source of operation is 4-20mA). 2. Press Auto key at stop status, the setting will switch to hand frequency source and hand operation source. Press Auto key at operation status, it stops the AC motor drive first (display AHSP warning), and switch to auto frequency source and auto operation source. 3. Successful mode switching for KPC-CE01, “AUTO” LED will be on; for KPC-CC01, it will display AUTO mode on the screen

Descriptions of LED Functions

LED	Descriptions
RUN	Steady ON: operation indicator of the AC motor drive, including DC brake, zero speed, standby, restart after fault and speed search. Blinking: drive is decelerating to stop or in the status of base block. Steady OFF: drive doesn’t execute the operation command
STOP RESET	Steady ON: stop indicator of the AC motor drive. Blinking: drive is in the standby status. Steady OFF: drive doesn’t execute “STOP” command.
FWD REV	Operation Direction LED 1. Green light is on, the drive is running forward. 2. Red light is on, the drive is running backward. 3. Twinkling light: the drive is changing direction.
HAND	(Only KPC-CE01 support this function) Steady On: In HAND/LOC mode Steady Off: In AUTO/REM mode
AUTO	(Only KPC-CE01Support this function) Steady On: In AUTO/REM mode Steady Off: In HAND/LOC mode

<table>
<tr><th>LED</th><th>Descriptions</th></tr>
<tr><td>CANopen~ “RUN”</td><td>RUN LED:
<table>
<tr><th>LED status</th><th>Condition/State</th></tr>
<tr><td>OFF</td><td>CANopen at initial
No LED</td></tr>
<tr><td>Blinking</td><td>CANopen at pre-operation
 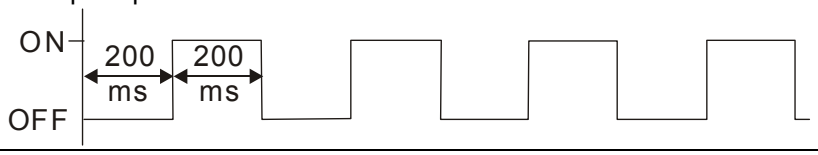
</td></tr>
<tr><td>Single flash</td><td>CANopen at stopped
 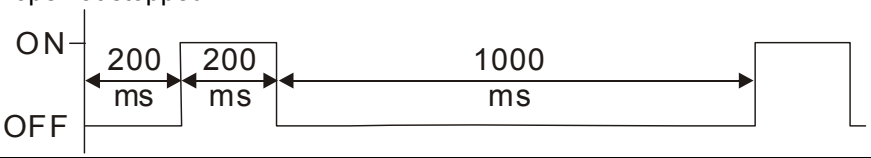
</td></tr>
<tr><td>ON</td><td>CANopen at operation status
No LED</td></tr>
</table></td></tr>
<tr><td>CANopen~ “ERR”</td><td>ERR LED:
<table>
<tr><th>LED status</th><th>Condition/ State</th></tr>
<tr><td>OFF</td><td>No Error</td></tr>
<tr><td>Single flash</td><td>One message fail
 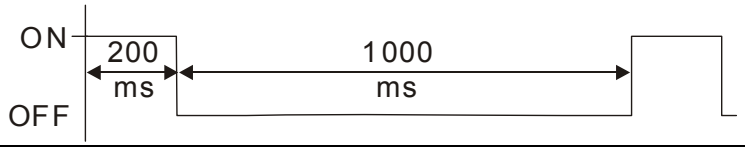
</td></tr>
<tr><td>Double flash</td><td>Guarding fail or heartbeat fail
 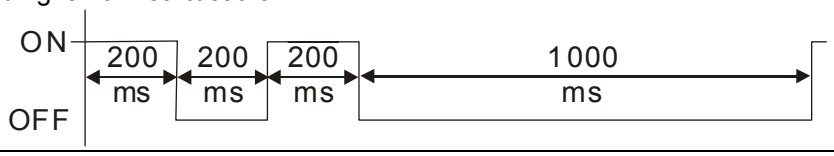
</td></tr>
<tr><td>Triple flash</td><td>SYNC fail
 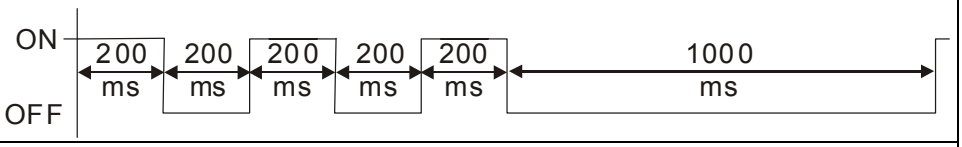
</td></tr>
<tr><td>ON</td><td>Bus off</td></tr>
</table></td></tr>
</table>

10-2 Function of Digital Keypad KPC-CC01

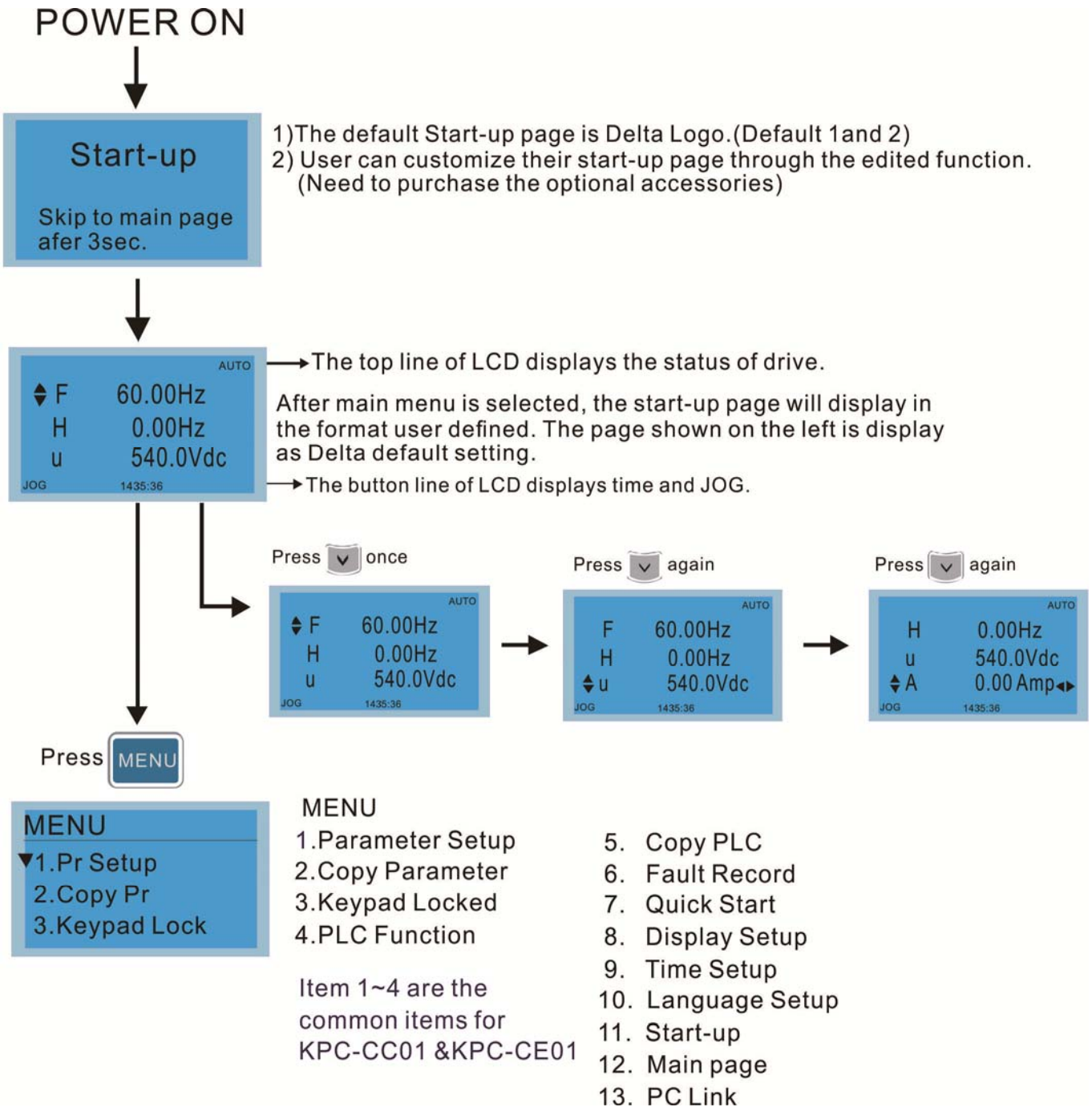

NOTE

1. Startup page can only display pictures, no flash.
2. When Power ON, it will display startup page then the main page. The main page displays Delta's default setting F/H/A/U, the display order can be set by Pr.00.03 (Startup display). When the selected item is U page, use left key and right key to switch between the items, the display order of U page is set by Pr.00.04 (User display).

Display Icon

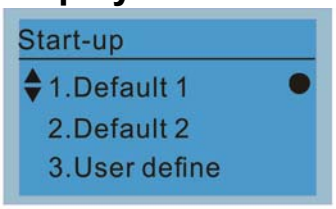

● : present setting

▲▼: roll down the page for more options

Press ^ v for more options.

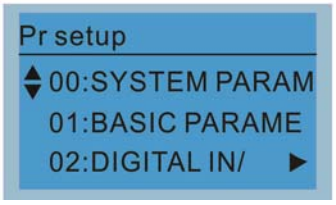

▶ : show complete sentence

Press < > for complete information

Display item

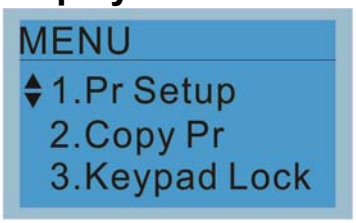

MENU
1.Parameter Setup
2.Copy Parameter
3.Keypad Locked
4.PLC Function
5. Copy PLC
6. Fault Record
7. Quick Start
8. Display Setup
9. Time Setup
10. Language Setup
11. Start-up
12. Main page
13. PC Link

Item 1~4 are the common items for KPC-CC01 &KPC-CE01

1. Parameter Setup

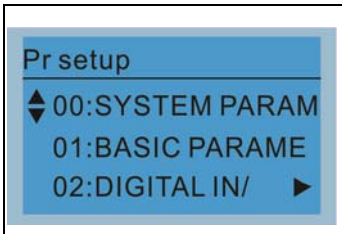

Press ENTER to select.

Press ^ v to select a parameter group.

Once a parameter group is selected, press ENTER to go into that group.

For example: Setup source of master frequency command.

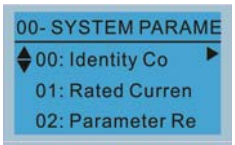

Once in the Group 00 Motor Drive Parameter, Use Up/Down key to select parameter 20: Auto Frequency Command.

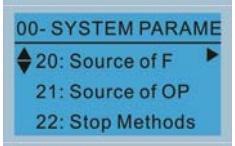

When this parameter is selected, press ENTER key to go to this parameter's setting menu.

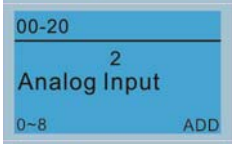

Use Up/Down key to choose a setting.
For example: Choose "2 Analogue Input, then press the ENTER key.

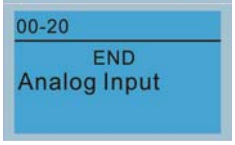

After pressing the ENTER key, an END will be displayed which means that the parameter setting is done.

2. Copy Parameter

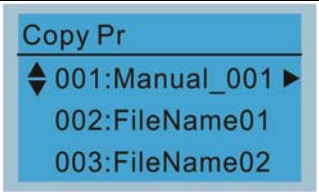

Press ENTER key to go to 001~004: content storage

4 duplicates are provided

The steps are shown in the example below.

Example: Saved in the motor drive.

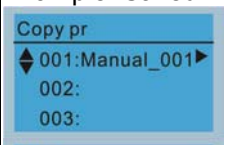

1 Go to Copy Parameter

2 Select the parameter group which needs to be copied and press ENTER key.

1 Select 1: Save in the motor drive.
2. Press ENTER key to go to "Save in the motor drive" screen.

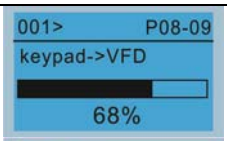

Begin to copy parameters until it is done.

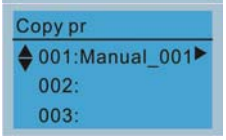

Once copying parameters is done, keypad will automatically be back to this screen.

Example: Saved in the keypad.

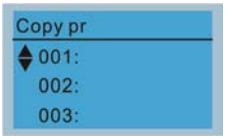

1. Once copying parameters is done, keypad will automatically be back to this screen.
2. Select the parameter group which needs to be copied and press ENTER key.

Press ENTER key to go to “Save in the motor drive” screen.

Use Up/Down key to select a symbol.
Use Left/Right key to move the cursor to select a file name.

String & Symbol Table:
！” ＃＄％＆’ （）＊＋，－．／０１２３４５６７８９：；＜＝＞？@ＡＢＣＤＥＦＧＨＩＪＫＬＭＮＯＰＱＲＳＴＵＶＷＸＹＺ〔＼〕＾＿ ‘ａｂｃｄｆｇｈｉｊｋｌｍｎｏｐｑｒｓｔｕｖｗｘｙｚ｛｜｝～

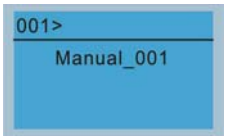

Once the file name is confirmed, press ENTER key.

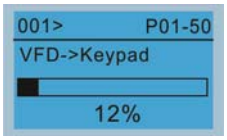

To begin copying parameters until it is done.

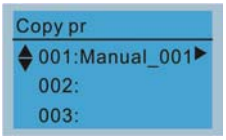

When copying parameters is completed, keypad will automatically be back to this screen.

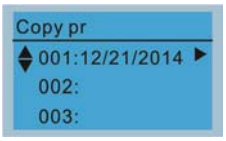

Press Right key to see the date of copying parameters.

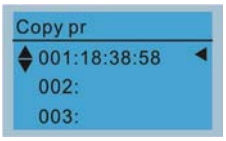

Press Right key to see the time of copying parameters.

3. Keypad locked

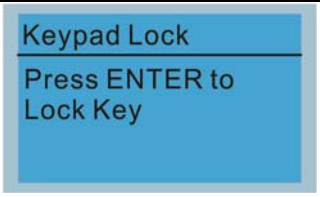

Press ENTER to lock

Keypad Locked

This function is used to lock the keypad. The main page would not display "keypad locked" when the keypad is locked, however it will display the message"please press ESC and then ENTER to unlock the keypad" when any key is pressed.

When the keypad is locked, the main screen doesn't display any status to show that.

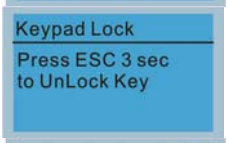

Press any key on the keypad; a screen as shown in image on the left will be displayed.

If ESC key is not pressed, the keypad will automatically be back to this screen.

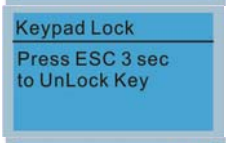

The keypad is still locked at this moment. By pressing any key, a screen as shown in the image on the left will still be displayed.

Press ESC for 3 seconds to unlock the keypad and the keypad will be back to this screen. Then each key on the keypad is functional.

Turn off the power and turn on the power again will not lock keypad.

4. PLC Function

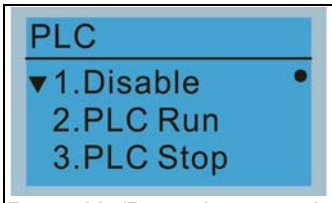

Press Up/Down key to select a PLC's function.
Then press ENTER.

When activate and stop PLC function, the PLC status will be displayed on main page of Delta default setting.

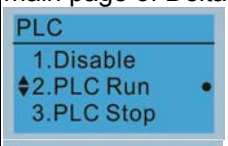

Optipn 2: Enable PLC function

Factory setting on the main screen displays PLC/RUN status bar.

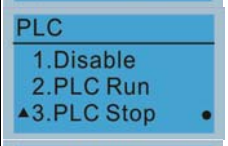

Option 3: Disable PLC function

Factory setting on the main screen displays PLC/STOP status bar

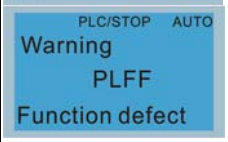

If the PLC program is not available in the control board, PLFF warning will be displayed when choosing option 2 or 3.
In this case, select option 1 : No Function to clear PLFF warning.

The PLC function of KPC-CE01 can only displays:

1. PLC0
2. PLC1
3. PLC2

5. Copy PLC

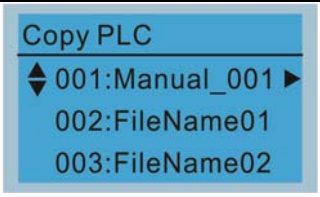

4 duplicates are provided

The steps are shown in the example below.

Example: Saved in the motor drive.

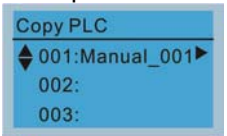

1 Go to Copy PLC

2 Select a parameter group to copy then press ENTER

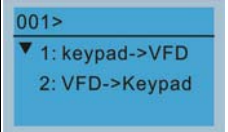

1 Select 1: Save in the motor drive.

2. Press ENTER key to go to “Save in the motor drive” screen.

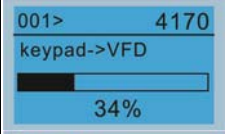

Begin to copy PLC until it is done.

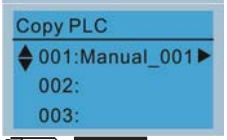

Once copying PLC is done, keypad will automatically be back to this screen.

NOTE

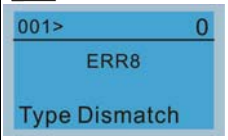

If “Option 1: Save in the motor drive” is selected, verify if the PLC program is built-in to KPC-CC01 keypad. If PLC program is not available in the keypad while “Option 1: Save in the motor drive” is selected, an “ERR8 Warning: Type not matching” will be display on the screen.

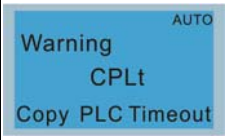

Unplug and plug back the keypad while copying the PLC program will have a CPLt warning.

Example: Saved in the keypad.

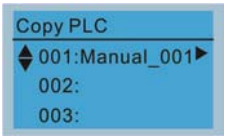

1. Once copying PLC is done, keypad will automatically be back to this screen.
2. Select the parameter group which needs to be copied and press ENTER key.

Press ENTER key to go to “Save in the motor drive” screen.

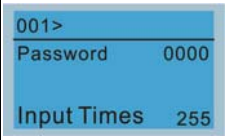

If WPLSoft editor is installed and password is set, enter the password to save the file onto digital display.

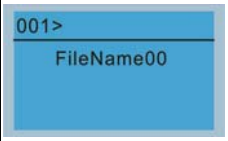

Use Up/Down key to select a symbol.
Use Left/Right key to move the cursor to select a file name.

String & Symbol Table:

！” ＃＄％＆’ （）＊＋，－．／０１２３４５６７８９：；＜＝＞？@Ａ
ＢＣＤＥＦＧＨＩＪＫＬＭＮＯＰＱＲＳＴＵＶＷＸＹＺ〔＼〕＾＿ ‘ａｂ
ｃｄｆｇｈｉｊｋｌｍｎｏｐｑｒｓｔｕｖｗｘｙｚ｛｜｝～

	001> Manual_001	Once the file name is confirmed, press ENTER key.
	001> 2010 VFD->Keypad 12%	To begin copying parameters until it is done.
	Copy PLC 001:Manual_001 002: 003:	When copying parameters is completed, keypad will automatically be back to this screen.
	Copy PLC 001:12/21/2014 002: 003:	Press Right key to see the date of copying parameters.
	Copy PLC 001:18:38:58 002: 003:	Press Right key to see the time of copying parameters.

6. Fault record

Fault record ▼1:oL 2:ovd 3:GFF Press ENTER to select. KPC-CE01 does not support this function.	Able to store 6 error code (Keypad V1.02 and previous versions) Able to store 20 error code (Keypad V1.03 and later version) The most recent error record is shown as the first record. Select an error record to see its detail such as date, tme, frequency, current, voltage, DCBUs voltage)	
	Fault record ▼1:oL 2:ovd 3:GFF	Press Up/Down key to select an error record. After selecting an error code, press ENTER to see that error record's detail
	1: oL Current: 79.57 Voltage: 189.2 BUS Voltage:409.5 1: oL Date: 01/20/2014 Time: 21:02:24 Outfreq: 32.61	Press Up/Down key to see an error record's detail such as date, time, frequency, current, voltage, DCBus voltage.
	Fault record 1:oL 2:ovd 3:GFF	Press Up/Down key to select an error record. After selecting an error code, press ENTER to see that error record's detail
	2: ovd Current: 79.57 Voltage: 189.2 BUS Voltage:409.5 2: ovd Date: 01/20/2014 Time: 21:02:24 Outfreq: 32.61	Press Up/Down key to see an error record's detail such as date, time, frequency, current, voltage, DCBus voltage.
	NOTE Fault actions of AC motor drive are record and save to KPC-CC01. When KPC-CC01 is removed and apply to another AC motor drive, the previous fault records will not be deleted. The new fault records of the present AC motor drive will accumulate to KPC-CC01.	

7. Quick Start

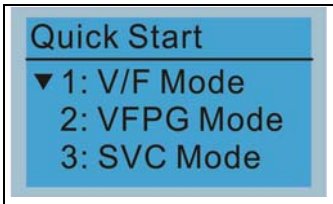

Press ENTER to select.

Quick Start:
1. V/F Mode
2. VFPG Mode
3. SVC Mode
4. FOCPG Mode (C2000 690V does not support)
5. TQCPG Mode (C2000 690V does not support)
6. My Mode

Description:

1. VF Mode

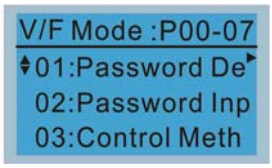

01:Password Decoder

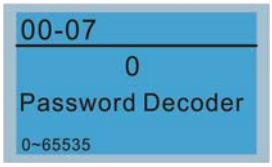

Items
1. Parameter Protection Password Input (P00-07)
2. Parameter Protection Password Setting (P00-08)
3. Control Mode (P00-10)
4. Control of Speed Mode (P00-11)
5. Load Selection (P00-16)
6. Source of the Master Frequency Command (AUTO) (P00-20)
7. Source of the Operation Command (AUTO) (P00-21)
8. Stop Method (P00-22)
9. Digital Keypad STOP function (P00-32)
10. Max. Operation Frequency (P01-00)
11. Base Frequency of Motor 1 (P01-01)
12. Max. Output Voltage Setting of Motor 1 (P01-02)
13. Min. Output Frequency of Motor 1 (P01-07)
14. Min. Output Voltage of Motor 1 (P01-08)
15. Output Frequency Upper Limit (P01-10)
16. Output Frequency Lower Limit (P01-11)
17. Accel. Time 1 (P01-12)
18. Decel Time 1 (P01-13)
19. Over-voltage Stall Prevention (P06-01)
20. Software Brake Level (P07-00)
21. Filter Time of Torque Command (P07-24)
22. Filter Time of Slip Compensation (P07-25)
23. Slip Compensation Gain (P07-27)

2. VFPG Mode

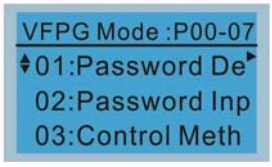

01: Password Decoder

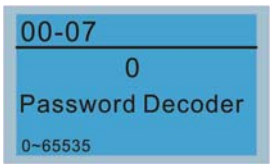

Items
1. Parameter Protection Password Input (P00-07)
2. Parameter Protection Password Setting (P00-08)
3. Control Mode (P00-10)
4. Control of Speed Mode (P00-11)
5. Load Selection (P00-16)
6. Source of the Master Frequency Command (AUTO) (P00-20)
7. Source of the Operation Command (AUTO) (P00-21)
8. Stop Method (P00-22)
9. Digital Keypad STOP function (P00-32)
10. Max. Operation Frequency (P01-00)
11. Base Frequency of Motor 1 (P01-01)
12. Max. Output Voltage Setting of Motor 1 (P01-02)
13. Min. Output Frequency of Motor 1 (P01-07)
14. Min. Output Voltage of Motor 1 (P01-08)
15. Output Frequency Upper Limit (P01-10)
16. Output Frequency Lower Limit (P01-11)
17. Accel. Time 1 (P01-12)

18. Decel Time 1 (P01-13)
19. Over-voltage Stall Prevention (P06-01)
20. Software Brake Level (P07-00)
21. Filter Time of Torque Command (P07-24)
22. Filter Time of Slip Compensation (P07-25)
23. Slip Compensation Gain (P07-27)
24. Encoder Type Selection (P10-00)
25. Encoder Pulse (P10-01)
26. Encoder Input Type Setting (P10-02)
27. ASR Control (P) 1 (P11-06)
28. ASR Control (I) 1 (P11-07)
29. ASR Control (P) 2 (P11-08)
30. ASR Control (I) 2 (P11-09)
31. P Gain of Zero Speed (P11-10)
32. I Gain of Zero Speed (P11-11)

3. SVC Mode

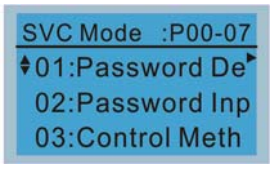

01: Password Decoder

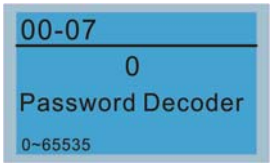

Items

1. Parameter Protection Password Input (P00-07)
2. Parameter Protection Password Setting (P00-08)
3. Control Mode (P00-10)
4. Control of Speed Mode (P00-11)
5. Load Selection (P00-16)
6. Carrier Frequency (P00-17)
7. Source of the Master Frequency Command (AUTO) (P00-20)
8. Source of the Operation Command (AUTO) (P00-21)
9. Stop Method (P00-22)
10. Digital Keypad STOP function (P00-32)
11. Max. Operation Frequency (P01-00)
12. Base Frequency of Motor 1 (P01-01)
13. Max. Output Voltage Setting of Motor 1 (P01-02)
14. Min. Output Frequency of Motor 1 (P01-07)
15. Min. Output Voltage of Motor 1 (P01-08)
16. Output Frequency Upper Limit (P01-10)
17. Output Frequency Lower Limit (P01-11)
18. Accel. Time 1 (P01-12)
19. Decel Time 1 (P01-13)
20. Full-load Current of Induction Motor 1 (P05-01)
21. Rated Power of Induction Motor 1 (P05-02)
22. Rated Speed of Induction Motor 1 (P05-03)
23. Pole Number of Induction Motor 1 (P05-04)
24. No-load Current of Induction Motor 1 (P05-05)
25. Over-voltage Stall Prevention (P06-01)
26. Over-current Stall Prevention during Acceleration (P06-03)
27. Derating Protection (P06-55)
28. Software Brake Level (P07-00)

29. Emergency Stop (EF) & Force to Stop Selection (P07-20)
30. Filter Time of Torque Command (P07-24)
31. Filter Time of Slip Compensation (P07-25)
32. Slip Compensation Gain (P07-27)

4. FOCPG Mode

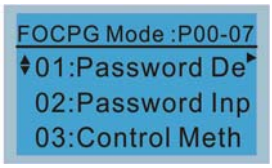

01: Password Decoder

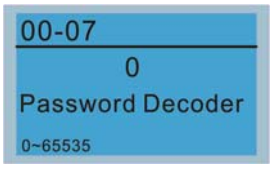

Items

1. Parameter Protection Password Input (P00-07)
2. Parameter Protection Password Setting (P00-08)
3. Control Mode (P00-10)
4. Control of Speed Mode (P00-11)
5. Source of the Master Frequency Command (AUTO) (P00-20)
6. Source of the Operation Command (AUTO) (P00-21)
7. Stop Method (P00-22)
8. Max. Operation Frequency (P01-00)
9. Base Frequency of Motor 1 (P01-01)
10. Max. Output Voltage Setting of Motor 1 (P01-02)
11. Output Frequency Upper Limit (P01-10)
12. Output Frequency Lower Limit (P01-11)
13. Accel. Time 1 (P01-12)
14. Decel Time 1 (P01-13)
15. Full-load Current of Induction Motor 1 (P05-01)
16. Rated Power of Induction Motor 1 (P05-02)
17. Rated Speed of Induction Motor 1 (P05-03)
18. Pole Number of Induction Motor 1 (P05-04)
19. No-load Current of Induction Motor 1 (P05-05)
20. Over-voltage Stall Prevention (P06-01)
21. Over-current Stall Prevention during Acceleration (P06-03)
22. Derating Protection (P06-55)
23. Software Brake Level (P07-00)
24. Emergency Stop (EF) & Force to Stop Selection (P07-20)
25. Encoder Type Selection (P10-00)
26. Encoder Pulse (P10-01)
27. Encoder Input Type Setting (P10-02)
28. System Control (P11-00)
29. Per Unit of System Inertia (P11-01)
30. ASR1 Low-speed Bandwidth (P11-03)
31. ASR2 High-speed Bandwidth (P11-04)
32. Zero-speed Bandwidth (P11-05)

5. TQCPG Mode

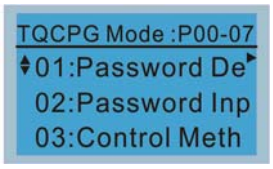

01: Password Decoder

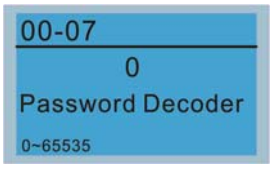

Items

1. Password Input (Decode) (P00-07)
2. Password Setting (P00-08)
3. Control Mode (P00-10)
4. Control of Speed Mode (P00-11)
5. Source of the Master Frequency Command (P00-20)
6. Source of the Operation Command (P00-21)
7. Max. Operation Frequency (P01-00)
8. Base Frequency of Motor 1 (P01-01)
9. Max. Output Voltage Setting of Motor 1 (P01-02)
10. Full-load Current of Induction Motor 1 (P05-01)
11. Rated Power of Induction Motor 1 (P05-02)
12. Rated Speed of Induction Motor 1 (P05-03)
13. Pole Number of Induction Motor 1 (P05-04)
14. No-load Current of Induction Motor 1 (P05-05)
15. Over-voltage Stall Prevention (P06-01)
16. Software Brake Level (P07-00)
17. Encoder Type Selection (P10-00)
18. Encoder Pulse (P10-01)
19. Encoder Input Type Setting (P10-02)
20. System Control (P11-00)
21. Per Unit of System Inertia (P11-01)
22. ASR1 Low-speed Bandwidth (P11-03)
23. ASR2 High-speed Bandwidth (P11-04)
24. Zero-speed Bandwidth (P11-05)
25. Max. Torque Command (P11-27)
26. Source of Torque Offset (P11-28)
27. Torque Offset Setting (P11-29)
28. Source of Torque Command (P11-33)
29. Torque Command (P11-34)
30. Speed Limit Selection (P11-36)
31. Forward Speed Limit (torque mode) (P11-37)
32. Reverse Speed Limit (torque mode) (P11-38)

6. My Mode

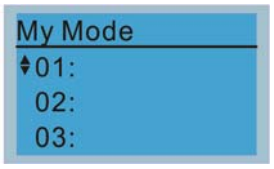

Click F4 in parameter setting page, the parameter will save to My Mode. To delete or correct the parameter, enter this parameter and click the “DEL” on the bottom right corner.

Items

It can save 01~32 sets of parameters (Pr).

Setup process

1. Go to Parameter Setup function. Press ENTER to go to the parameter which you need to use. There is an ADD on the bottom right-hand corner of the screen. Press F4 on the key pad to add this parameter to My Mode

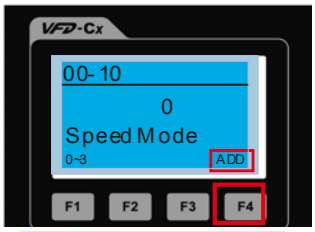

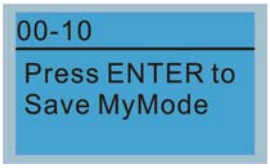

2. The parameter (Pr) will be displayed in My mode if it is properly saved. To correct or to delete this Pr. clicks DEL.

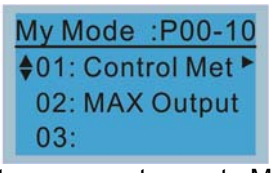

3. To delete a parameter, go to My Mode and select a parameter which you need to delete. Press ENTER to enter the parameter setting screen. There is a DEL on the bottom left-hand corner of the screen. Press F4 on the keypad to delete this parameter from My Mode.

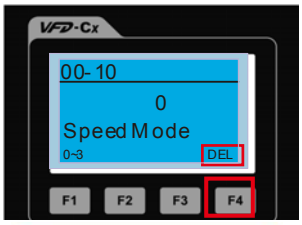

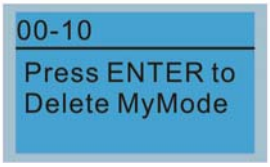

4. After pressing ENTER to delete <01 Control Mode>, the <02 Maximum Operating Frequency > will automatically replace <01 Control Mode>.

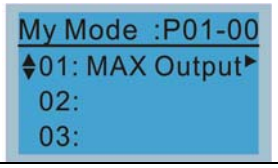

8. Display setup

Press ENTER to setting menu.

1. Contrast

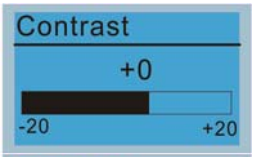

Use Up/Down key to adjust the setting value.

After selecting a setting value. Press ENTER to see screen's display after contrast is adjusted to be +10.

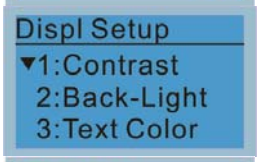

When the setting value is 0 Min, the back light will be steady on.

Then press ENTER.

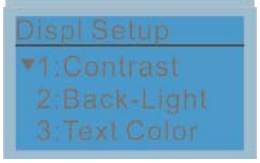

After select a setting value Press ENTER to see screen's display result after contrast is adjusted to be -10.

2. Back-light

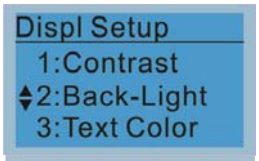

Press ENTER to go to Back Light Time Setting screen.

Use Up / Down key to adjust the setting value.

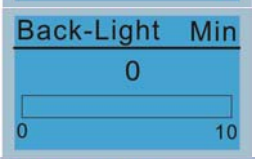

When the setting value is 0 Min, the back light will be steady on.

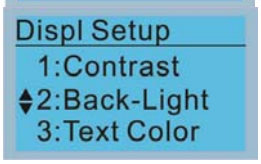

When the setting value is 10 Min, the backlight will be off in 10 minutes.

3. Text Color

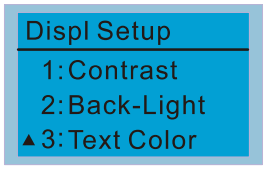

Press ENTER to go to Text Color Setting screen.

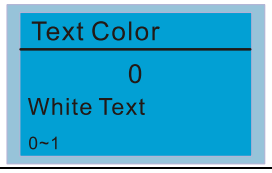

The default value is White Text.

	Text Color 1 Blue Text 0~1	Use Up / Down key to adjust the setting value.
	Displ Setup ▼1 : Contrast 2 : Back-Light 3 : Text Color	The setting value changes to Blue Text.

9. Time setting

Time setup 2009/01/01 _ _ : _ _ : _ _ Use Left/Right key to select Year, Month, Day, Hour, Minute or Second to set up	Time Setup 2014/01/01 00 : 00 : 00	Use Up/Down key to set up Year
	Time Setup 2014/01/01 00 : 00 : 00	Use Up/Down key to set up Month
	Time Setup 2014/01/01 00 : 00 : 00	Use Up/Down key to set up day
	Time Setup 2014/01/01 21 : 00 : 00	Use Up/Down key to set up hour
	Time Setup 2014/01/01 21 : 12 : 00	Use Up/Down key to set up Minute
	Time Setup 2014/01/01 21 : 12 : 14	Use Up/Down key to set up Second
	Time Setup END	After setting up, press ENTER to confirm the setup.
	NOTE Limitation: The charging process of the super capacitor will finish in about 6 minutes. **When the digital keypad is removed, the time setting will be in standby status for 7 days**. After this period, the time needs to be reset.	

10. Language setup

Use Up/Down key to select language, than press ENTER.

Language setting option is displayed in the language of the user's choice.
Language setting options:

1. English
2. 繁體中文
3. 简体中文
4. Türkçe
5. Русский
6. Español
7. Português
8. français

11. Startup-up

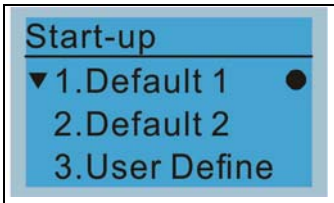

1. Default 1 DELTA LOGO

2. Default 2 DELTA Text

3. User Defined: optional accessory is require (TPEditor & USB/RS-485 Communication Interface-IFD6530)
Install an editing accessory would allow users to design their own start-up page.If editor accessory is not installed, "user defined" option will dispay a blank page.

<u>USB/RS-485 Communication Interface-IFD6530</u>
Please refer to Chapter 07 Optional Acessories for more detail.

<u>TPEditor</u>
Go to Delta's website to download TPEditor V1.60 or later versions.
http://www.deltaww.com/services/DownloadCenter2.aspx?secID=8&pid=2&tid=0&CID=06&itemID=060302&typeID=1&downloadID=,&title=-- Select Product Series --&dataType=8;&check=1&hl=en-US

12. Main page

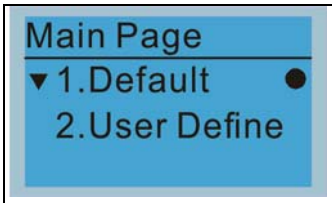

Default picture and editable picture are available upon selection.

Press ENTER to select.

1. Default page

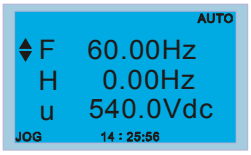

F 60.00Hz >>> H >>> A >>> U (circulate)

2. User Defined: optional accessory is require (TPEditor & USB/RS-485 Communication Interface-IFD6530)
Install an editing accessory would allow users to design their own start-up page.If editor accessory is not installed, "user defined" option will dispay a

blank page.

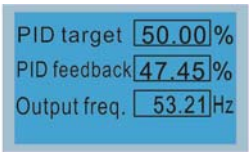

USB/RS-485 Communication Interface-IFD6530

Please refer to Chapter 07 Optional Acessories for more detail.

TPEditor

Go to Delta's website to download TPEditor V1.60 or later versions.

http://www.deltaww.com/services/DownloadCenter2.aspx?secID=8&pid=2&tid=0&CID=06&itemID=060302&typeID=1&downloadID=,&title=-- Select Product Series --&dataType=8;&check=1&hl=en-US

13. PC Link

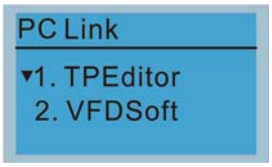

1. TPEditor: This function allows users to connect the keypad to a computer then to download and edit user defined pages.

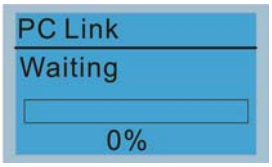

Click ENTER to go to <Waiting to connect to PC>

In TPEditor, choose <Communication>, then choose "Write to HMI"

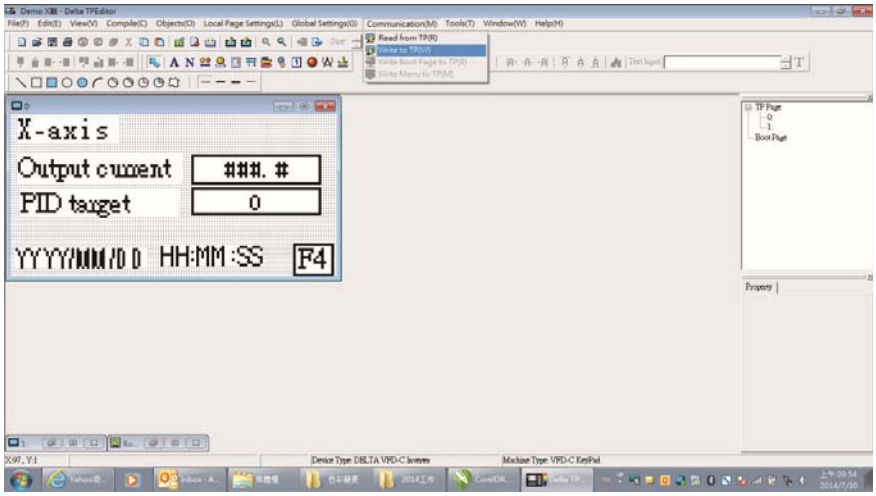

Choose <YES> in the <Confirm to Write> dialogue box.

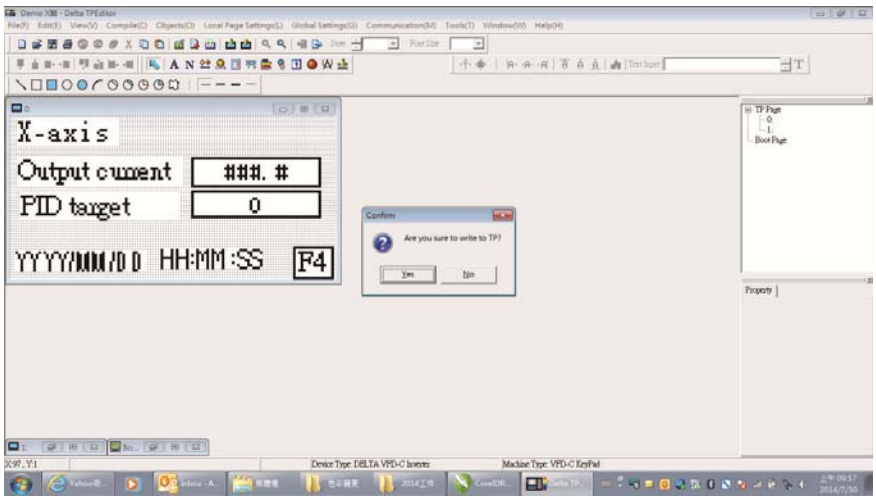

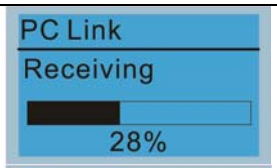

Start downloading pages to edit KPC-CC01.

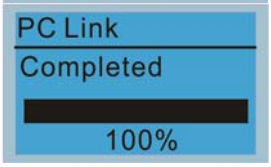

Download completed

2. VFDSoft: this function allows user to link to the VFDSoft Operating software then to upload data

   Copy parameter 1~4 in KPC-CC01

   Connect KPC-CCO1 to a computer

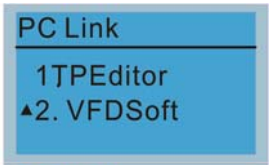

Start downloading pages to edit to KPC-CC01

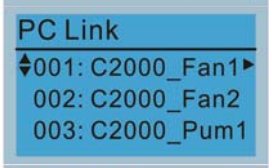

Use Up/Down key to select a parameter group to upload to VFDSoft.
Press ENTER

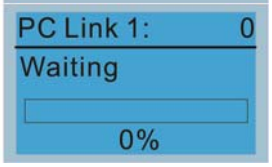

Waiting to connect to PC

Open VFDSoft, choose <Parameter Manager function>

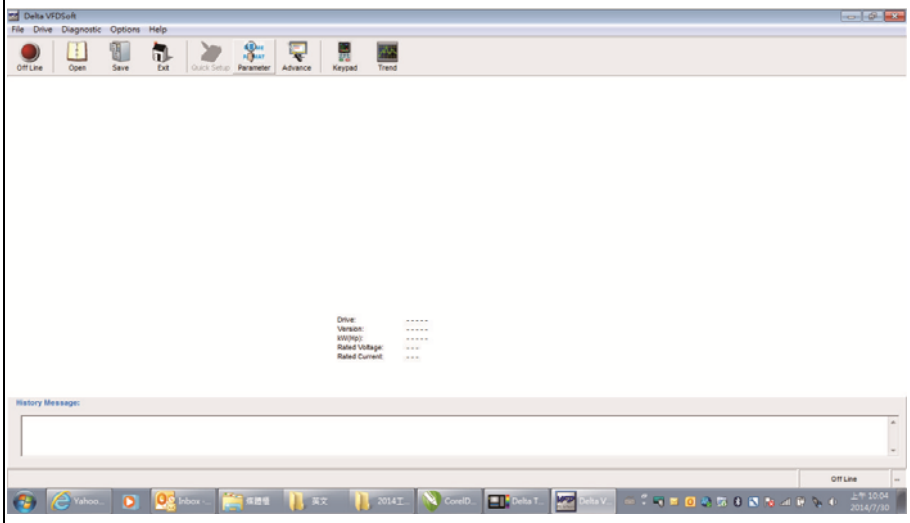

In Parameter Manager, choose <Load parameter table from KPC-CC01>

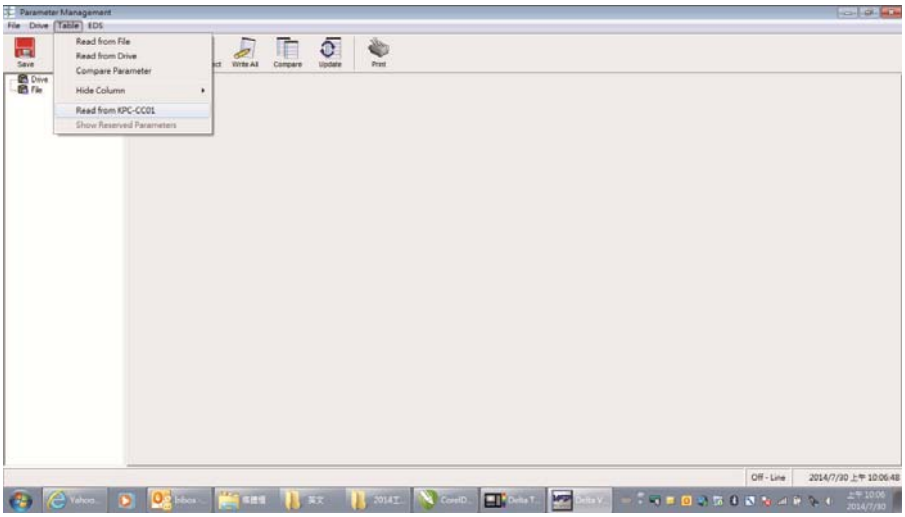

Choose the right communication port and click OK

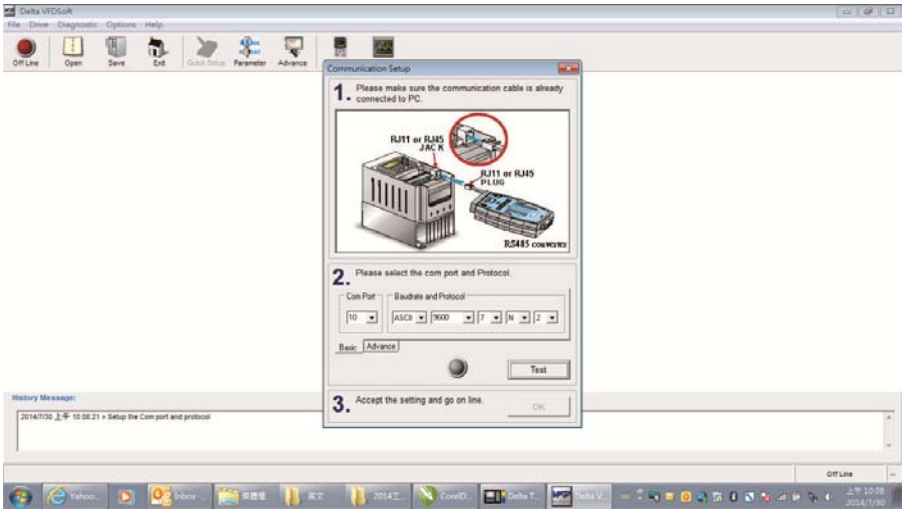

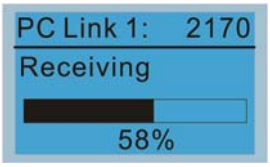

Start to upload parameters to VFDSoft

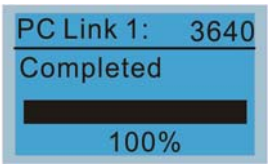

Uploading parameter is completed

Before using the user defined starting screen and user defined main screen, the starting screen setup and the main screen setup have to be preset as user defined.

If the user defined page are not downloaded to KPC-CC01, the starting screen and the main screen will be blank.

Other display

When fault occur, the menu will display:

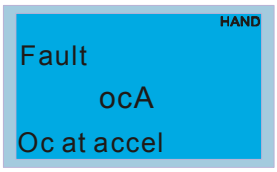

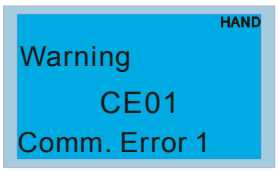

1. Press STOP/RESET button to reset the fault code. If still no response, please contact local distributor or return to the factory. To view the fault DC BUS voltage, output current and output voltage, press “MENU”→“Fault Record”.
2. After reseting, if the screen returns to main page and shows no fault after pressing ESC, the fault is clear.
3. When fault or warning message appears, backlight LED will blinks until the fault or the warning is cleared.

Optional accessory: RJ45 Extension Lead for Digital Keypad

Part No.	Description
CBC-K3FT	RJ45 extension lead, 3 feet (approximately 0.9m)
CBC-K5FT	RJ45 extension lead, 5 feet (approximately 1.5 m)
CBC-K7FT	RJ45 extension lead, 7 feet (approximately 2.1 m)
CBC-K10FT	RJ45 extension lead, 10 feet (approximately 3 m)
CBC-K16FT	RJ45 extension lead, 16 feet (approximately 4.9 m)

Note: When you need to buy communication cables, buy non-shielded, 24 AWG, 4 twisted pair, 100 ohms communication cables.

10-3 TPEditor Installation Instruction

TPEditor can edit up to 256 HMI (Human-Machine Interface) pages with a total storage capacity of 256KB. Each page can edit 50 normal objects and 10 communication objects.

1) TPEditor: Setup & Basic Functions

1. Run TPEditor version 1.60 or above

2. Go to File(F)→Click on New. The Window below will pop up. At the device type, click on the drop down menu and choose DELTA VFD-C Inverter. At the TP type, click on the drop down menu and choose VFD-C KeyPad. As for File Name, enter TPE0. Now click on OK.

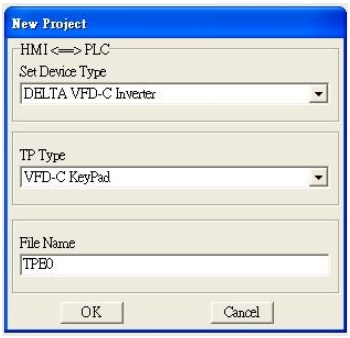

3. You are now at the designing page. Go to Edit (E)→Click on Add a New Page (A) or go to the TP page on the upper right side, right click once on TP page and choose Add to increase one more page for editing.

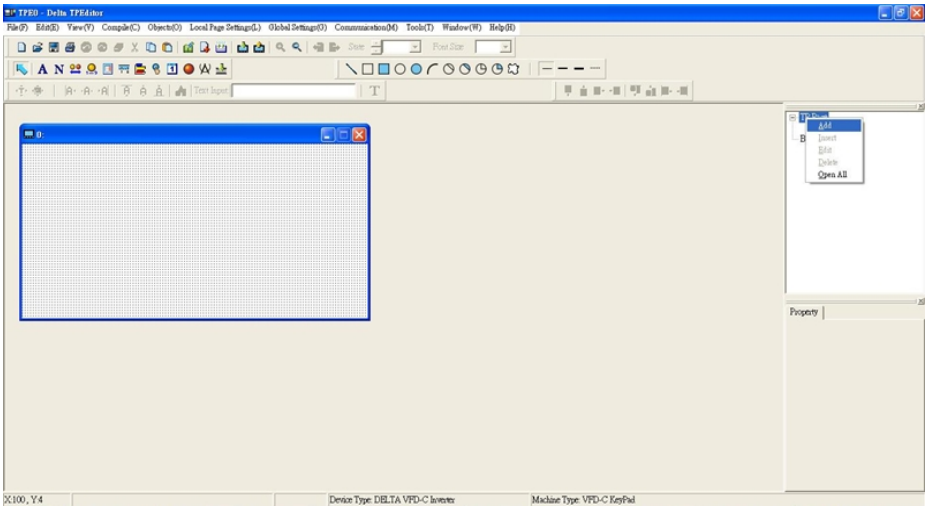

4. Edit Startup Page

5. Static Text . Open a blank page, click once on this button , and then double click on that blank page. The following windows will pop up.

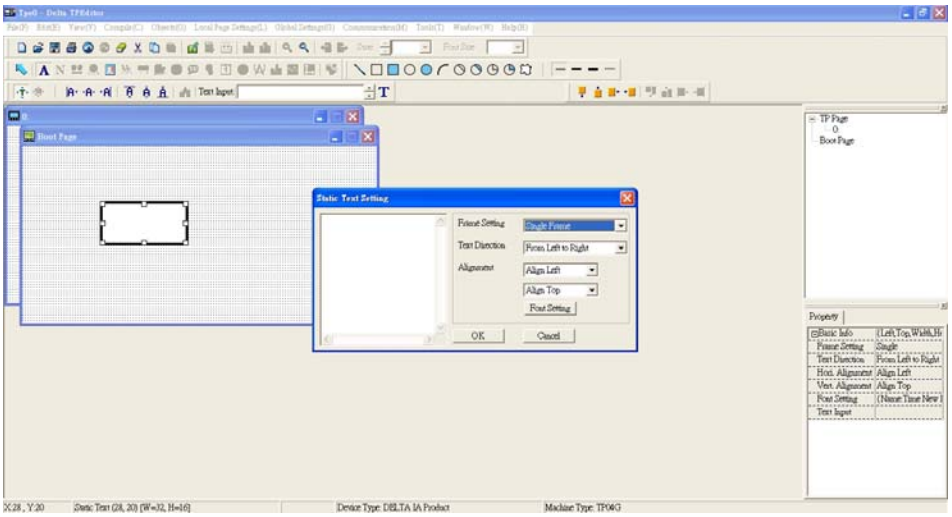

6. Static Bitmap →Open a blank page, then click once on this button and then double click on that blank page. The following window will pop up.

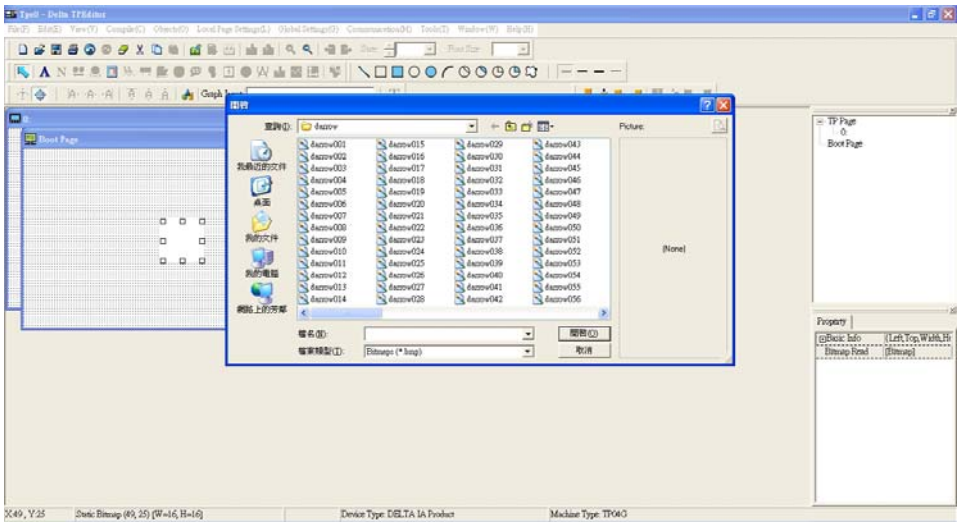

Please note that Static Bitmap setting support only images in BMP format. Now choose a image that you need and click open, then that image will appear in the Static Bitmap window.

7. Geometric Bitmap → As shown in the picture on the left side, there are 11 kinds of geometric bitmap to choose. Open a new blank page then click once on a geometric bitmap icon that you need. Then drag that icon and enlarge it to the size that you need on that blank page.

8. Finish editing the keypad starting screen and select **Communication>Input User Defined Keypad Starting Screen.**

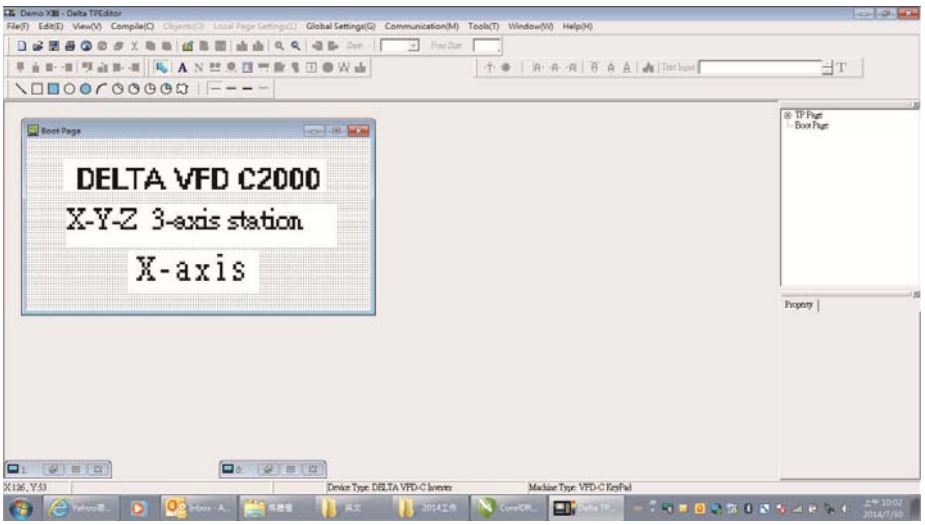

9. Downloading setting: Go to Tool > Communication. Set up communication port and speed of IFD6530.

10. Only three speed selections are available: 9600 bps, 19200 bps and 38400 bps.

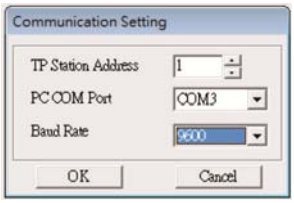

11. When a dialogue box displayed on the screen asking to confirm writing or not, press buttons on the keypad to go to MENU, select PC LINK and then press ENTER and wait for few seconds. Then select YES on the screen to start downloading.

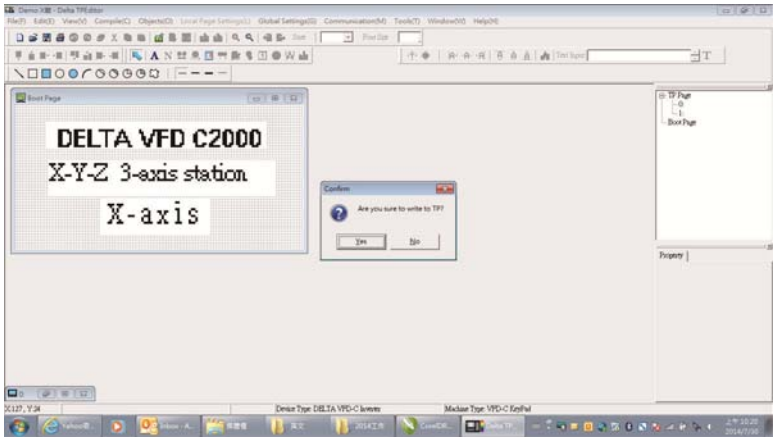

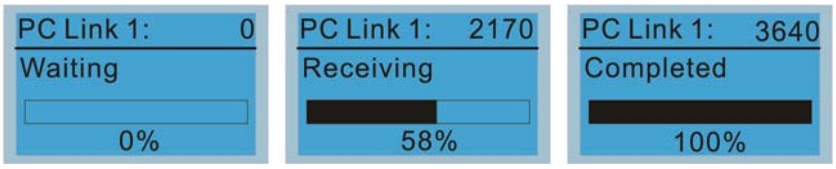

2) Edit Main Page & Example of Download

1. Go to editing page, select EditàAdd one page or press the button ADD on the right hand side of the HMI page to increase number of pages to edit. This keypad currently support up to 256 pages.

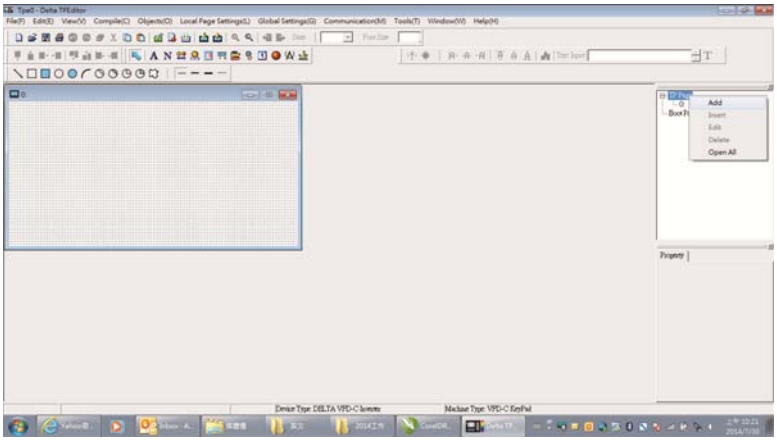

2. On the bottom right-hand corner of the HMI, click on a page number to edit or go to VIEW >HMI page to start editing main page. As shown in the image, the following objects are available. From left to right: Static Text, ASCII Display, Static Bitmap, Scale, Bar Graph, Button, Clock Display, Multi-state bit map, Units, Numeric Input and 11 geometric bitmaps and lines of different width. The application of Static Text, Static Bitmap, and geometric bitmap is the same as the editing startup page.

3. Numric/ASCII Display : To add a Numeric/ASCII Display object to a screen, double click on the object to set up Related Devices, Frame Setting , Fonts and Alignment.

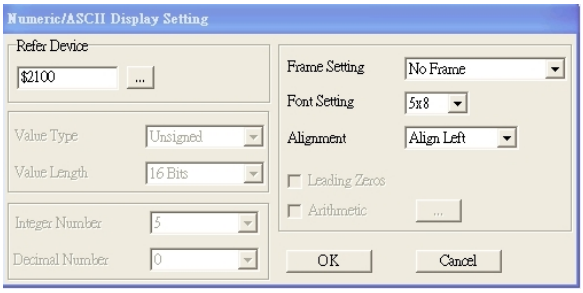

Related Device: Choose the VFD Communication Port that you need, if you want to read output frequency (H), set the VFD Communication Port to $2202. For other values, please refer to ACMD ModBus Comm Address List.

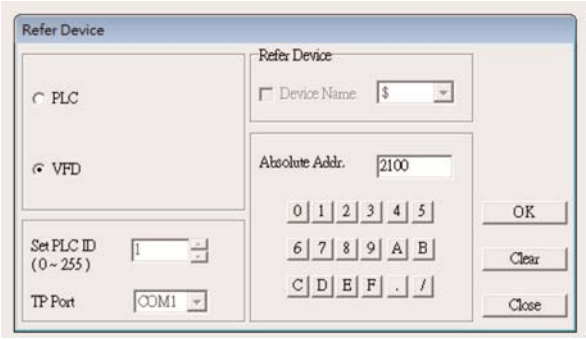

4. Scale Setting : On the Tool Bar, click on this for Scale Setting. You can also edit Scale Setting in the Property Window on the right hand side of your computer screen.

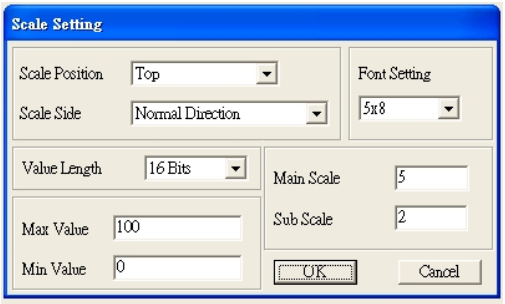

a. Scale Position: Click on the drop down list to choose which position that you need to place a scale.
b. Scale Side: Click on the drop down list to choose if you want to number your scale from smaller number to bigger number or from big to small. Click OK to accept this setting or click Cancel to abort.
c. Font Setting: Click on the drop down list to choose the Font setting that you need then click OK to accept the setting or click Cancel to abort.
d. Value Length: Click on the drop down to choose 16bits or 32 bits. Then click OK to accept the setting or click Cancel to abort.
e. Main Scale & Sub Scale: In order to divide the whole scale into equal parts, key in the numbers of your choices for main scale and sub scale.
f. Maximum value & Minimum Value are the numbers on the two ends of a scale. They can be negative numbers. But the values allowed to be input are limited by the length of value. For example, when the length of value is set to **be hexadecimal**, the maximum and the minimum value cannot be input as -4000.
Follow the Scale setting mentioned above; you will have a scale as shown below.

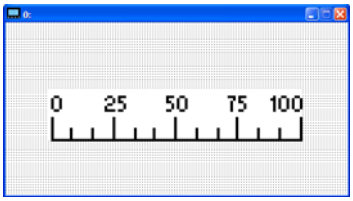

5. Bar Graph setting :

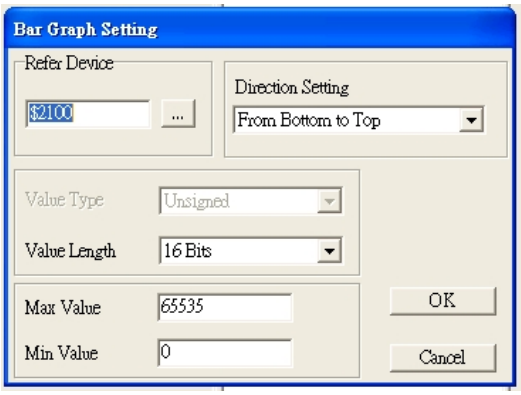

a. Related Device: Choose the VFD Communication Port that you need.
b. Direction Setting: Click on the drop down menu to choose one of the following directions: From Bottom to Top, From Top to Bottom, From Left to Right or From Right to Left.
c. Maximum Value & Minimum Value: They define the range covered by the maximum value and minimum value. If a value is smaller than or equal to the minimum value, then the bar graph will be blank. If a value is bigger or equal to the maximum value, then the bar graph will be full. If a value is between minimum and maximum value, then the bar graph will be filled proportionally.

6. Button : Currently this function only allows the Keypad to switch pages, other functions are not yet available. Text input function and Image inserted functions are not yet supported.

   Double click on to open set up window.

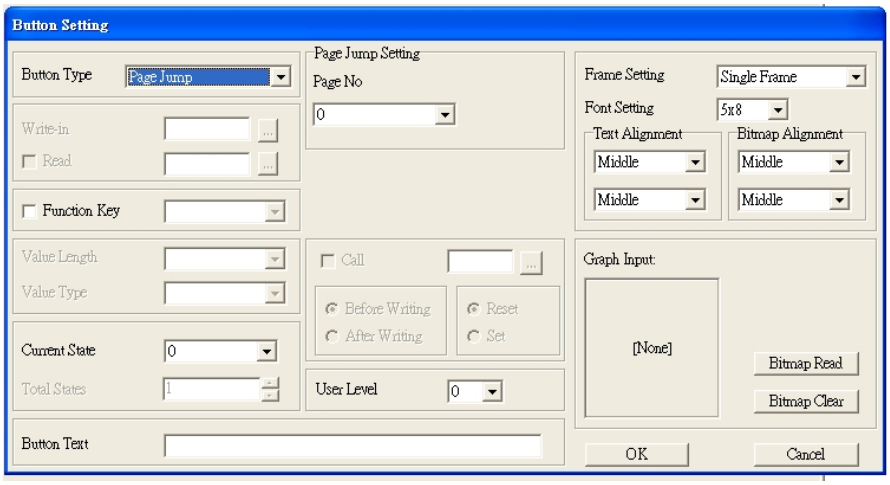

<Button Type> allows users set up buttons' functions. <Page Jump> and <Constant Setting> are the only two currently supported functions.

A [Page Jump] function setting

- Page Jump setting: After you choose the Page Jump function in the drop down list, you will see this Page Jump Setting Menu
- <Function Key> allows you to assign functions to the following keys on the KPC-CC01 keypad: F1, F2, F3, F4, Up, Down, Left and Right. Please note that the Up and Down keys are locked by TPEditor. These two keys cannot be programmed. If you want to program Up and Down keys, go to Tool→Function Key Settings (F)→Re-Define Up/Down Key(R).

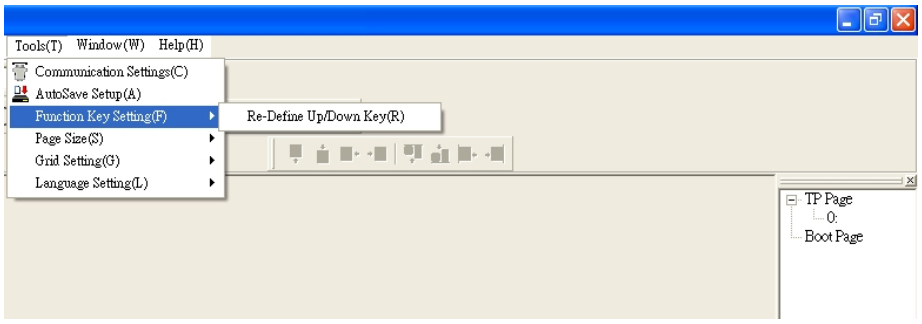

- Button Text: This function allows user to name buttons. For example, key in <Next Page> in the empty space, a button will have the wording <Next Page> displayed on it.

B [Constant setting] function

This function is to set up the memory address' value of the VFD or PLC. When pressing the <function button> set up in before, a value will be written to the memory address of the <Constant Setting>. This function can be used as initializing a variable.

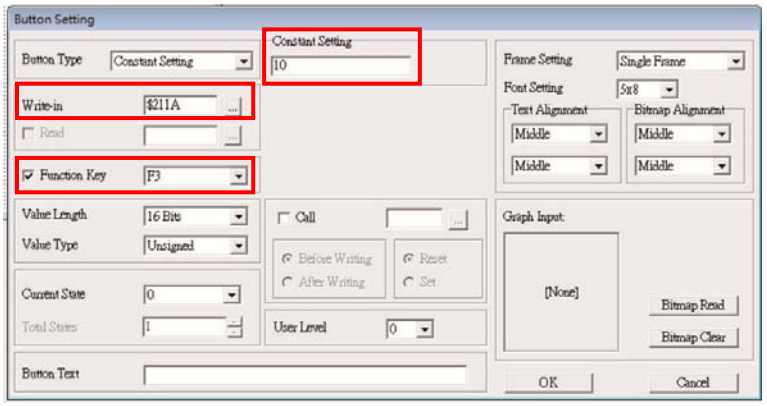

7. Clock Display Setting : The setup window of the Clock Display is shown as the image below. Time, Day or Date can be displayed on the keypad.
   Open a new file and click once in that window, you will see the following
   In the clock display setting, you can choose to display Time, Day or Date on the Keypad. To adjust time, go to #9 on the Keypad's menu. You can also adjust Frame Setting, Font Setting and Alignment.

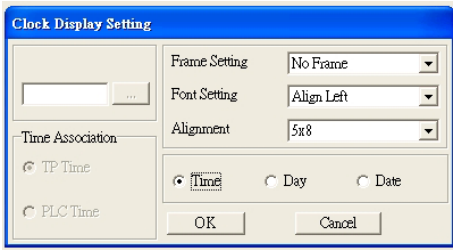

8. Multi-state bitmap : The setup window of the multi-state is shown as the image below. This object reads the bit's property value of the PLC. It defines what image or wording is when this bit is 0 or when this bit is 1. Set the initial status to be 0 or 1 to define the displayed image or wording.

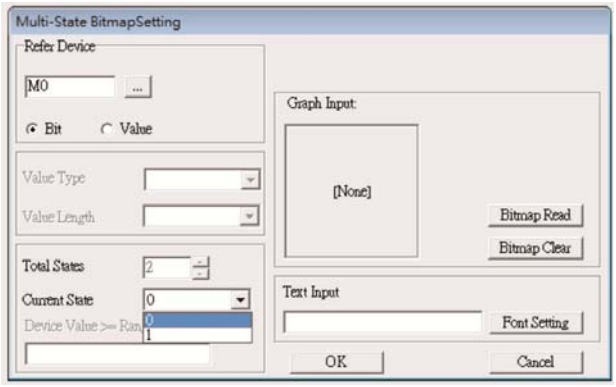

9. Unit Measurement : Click once on this Button:
   Open a new file and double click on that window, you will see the following

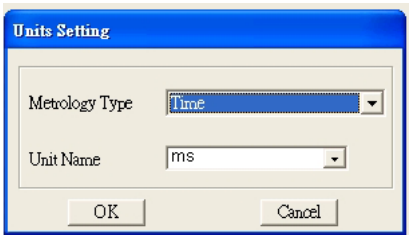

Choose from the drop down list the Metrology and the Unity Name that you need.
As for Metrology, you have the following choices Length, Square Measure, Volume/Solid Measure, Weight, Speed, Time and Temperature. The unit name changes automatically when you change metrology type.

10. Numeric Input Setting:

This menu allows you to provide parameters or communication ports and to input numbers.

Click once on this button .

Open a new file and double click on that window, you will see the following:

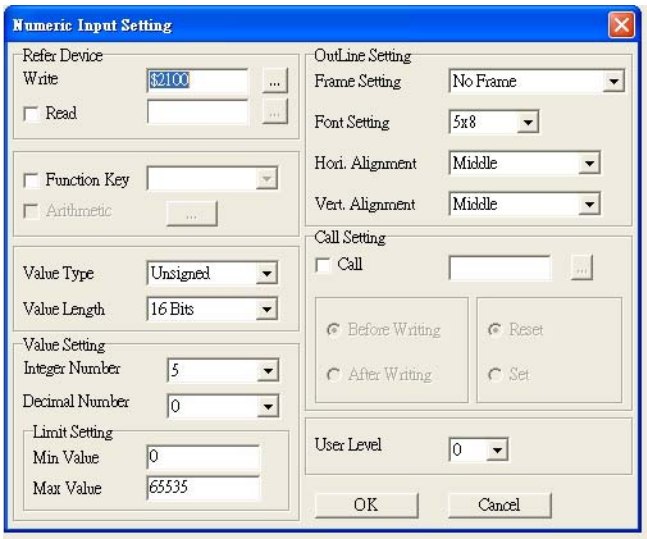

a. Related Device: There are two blank spaces to fill in, one is <Write> and another one is <Read>. Input the numbers that you want to display and the corresponding numbers of a parameter and that of a communication port. For example, input 012C to Read and Write Parameter P01-44.
b. OutLine Setting: The Frame setting, Font setting, Vertical Alignment and Horizontal Alignment are the same as mentioned before. Click on the drop down menu and choose the setting that you need.
c. Function key: The setting here allows you to program keys on the keypad. Press the key on the menu then the corresponding key on the keypad will start to blink, then press Enter to confirm the setting.
d. Value Type & Value Length: These two factors influence the range of the Minimum and Maximum Value of the Limit Setting. Please note that the corresponding supporting values for C2000 have to be 16bits. The 32bits values are not supported.
e. Value Setting: This part is set automatically by the keypad itself.
f. Limit Setting: Input the range the security setting here.

For example, if you set Function Key as F1, Minimum Value as 0 and Maximum Value ias 4, then press F1 on Keypad Then you can press Up and Down key on the keypad to increase or decrease the value. Press Enter Key on the keypad to confirm your setting. You can also go to parameter table 01-44 to verify if your input correctly the value.

11. Download TP Page : Press Up or Down key on the keypad until you reach #13 PC Link.
Then press Enter on the keypad and you will see the word “Waiting” on keypad’s screen. Now choose a page that you have created then go to Communication (M)→Write to TP(W) to start downloading the page to the keypad
When you see the word Completed on the keypad’s screen, that means the download is done. Then you can press ESC on the keypad to go back to the menu of the keypad.

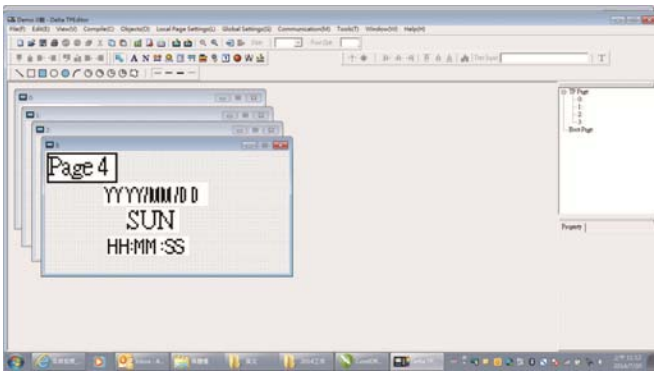

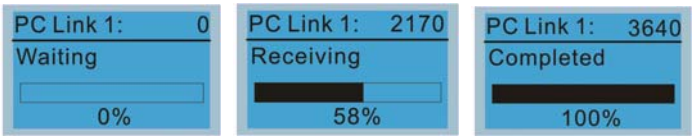

10-4 Digital Keypad KPC-CC01 Fault Codes and Descriptions

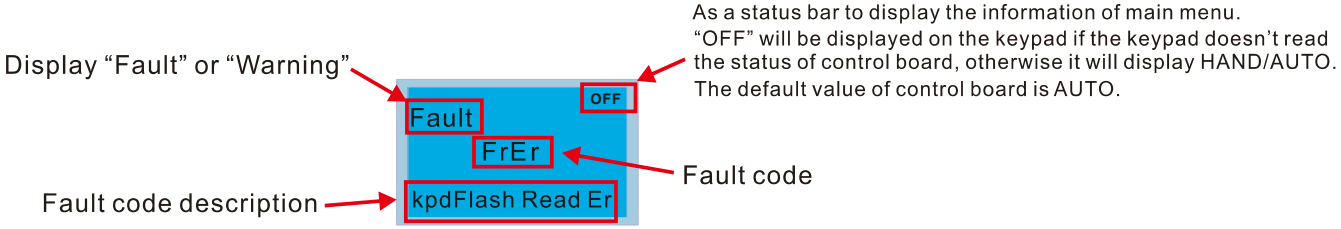

Fault Codes

LCM Display *	Description	Corrective Actions
HAND Fault FrEr kpdFlash Read Er	Keypad flash memory read error	An error has occurred on keypad's flash memory. 1. Press RESET on the keypad to clear errors. 2. Verify what kind of error has occurred on keypad's flash memory. 3. Shut down the system, wait for ten minutes, and then power on again the system. If none of the solution above works, contact your authorized local dealer.
HAND Fault FSEr kpdFlash Save Er	Keypad flash memory save error	An error has occurred on keypad's flash memory. 1. Press RESET on the keypad to clear errors. 2. Press RESET on the keypad to clear errors. 3. Shut down the system, wait for ten minutes, and then power on again the system. If none of the solution above works, contact your authorized local dealer.
HAND Fault FPEr kpdFlash Pr Er	Keypad flash memory parameter error	Errors occurred on parameters of factory setting. It might be caused by firmware update. 1. Press RESET on the keypad to clear errors. 2. Verify if there's any problem on Flash IC. 3. Shut down the system, wait for ten minutes, and then power on again the system. If none of the solution above works, contact your local authorized dealer.
HAND Fault VFDr Read VFD Info Er	Keypad flash memory when read AC drive data error	Keypad can't read any data sent from VFD. 1. Verify if the keypad is properly connect to the motor drive by a communication cable such as RJ-45. 2. Press RESET on the keypad to clear errors. 3. Shut down the system, wait for ten minutes, and then power on again the system. If none of the solution above works, contact your local authorized dealer.
HAND Fault CPUEr CPU Error	and then power on again the system.	A Serious error has occurred on keypad's CPU. 1. Verify if there's any problem on CPU clock? 2. Verify if there's any problem on Flash IC? 3. Verify if there's any problem on RTC IC? 4. Verify if the communication quality of the RS485 is good? 5. Shut down the system, wait for ten minutes, and then power on again the system. If none of the solution above works, contact your local authorized dealer.

Warning Codes

LCM Display *	Description	Corrective Actions
HAND Warning CE01 Comm Command Er	Modbus function code error	Motor drive doesn't accept the communication command sent from keypad. 1. Verify if the keypad is properly connected to the motor drive on the communication contact by a communication cable such as RJ-45. 2. Press RESET on the keypad to clear errors. If none of the solution above works, contact your local authorized dealer.
HAND Warning CE02 Comm Address Er	Modbus data address error	Motor rive doesn't accept keypad's communication address. 1. Verify if the keypad is properly connected to the motor drive on the communication contact by a communication cable such as RJ-45. 2. Press RESET on the keypad to clear errors. If none of the solution above works, contact your local authorized dealer.
HAND Warning CE03 Comm Data Error	Modbus data value error	Motor drive doesn't accept the communication data sent from keypad. 1. Verify if the keypad is properly connected to the motor drive on the communication contact by a communication cable such as RJ-45. 2. Press RESET on the keypad to clear errors. If none of the solution above works, contact your local authorized dealer.
HAND Warning CE04 Comm Slave Error	Modbus slave drive error	Motor drive cannot process the communication command sent from keypad. 1. Verify if the keypad is properly connected to the motor drive on the communication contact by a communication cable such as RJ-45. 2. Press RESET on the keypad to clear errors. 3. Shut down the system, wait for ten minutes, and then power on again the system. If none of the solution above works, contact your local authorized dealer.
HAND Warning CE10 KpdComm Time Out	Modbus transmission time-Out	Motor drive doesn't respond to the communication command sent from keypad. 1. Verify if the keypad is properly connected to the motor drive on the communication contact by a communication cable such as RJ-45. 2. Press RESET on the keypad to clear errors. 3. Shut down the system, wait for ten minutes, and then power on again the system. If none of the solution above works, contact your local authorized dealer.
HAND Warning TPNO TP No Object	Object not supported by TP Editor	Keypad's TP Editor uses unsupported object or Drive series. 1. Verify how the TP Editor should use that object. Delete unsupported object and unsupported setting. 2. Reedit the TP editor and then download it. 3. Make sure the the Drive series support TP functions. If it didn't, the main page will display default. If none of the solution above works, contact your local authorized dealer.

NOTE The warning code which shows as "CExx" only occurs when the communication problem between the drive and keypad, and it's nothing to do with the drive and other device. Be noted that the warning code description to judge the cause of error if "CExx" occurs.

File Copy Setting Fault Description:

These faults will happen when KPC-CC01 cannot perform the command after clicking the Enter button in copy function.

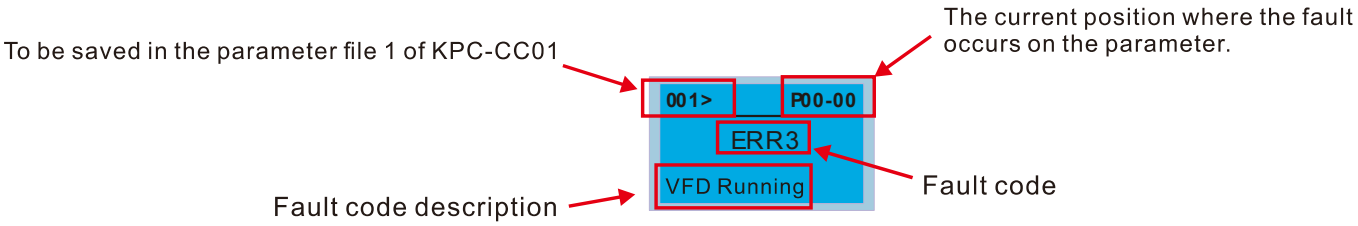

LCM Display *	Description	Corrective Actions
001> P00-00 ERR1 Read Only	Parameter and rile are read only	The property of the parameter/file is read-only and cannot be written to. 1. Verify the specification on the user manual. If the solution above doesn't work, contact your local authorized dealer.
001> P00-00 ERR2 Write Fail	Fail to write parameter and file	An error occurred while write to a parameter/file. 1. Verify if there's any problem on the Flash IC. 2. Shut down the system, wait for ten minutes, and then power on again the system. If none of the solution above work, contact your local authorized dealer.
001> P00-00 ERR3 VFD Running	AC drive is in operating status	A setting cannot be made while motor drive is in operation. 1. Verify if the drive is not in operation. If the solution above doesn't work, contact your local authorized dealer.
001> P00-00 ERR4 Pr Lock	AC drive parameter is locked	A setting cannot be made because a parameter is locked. 1. Verify if the parameter is locked or not. If it is locked, unlock it and try to set up the parameter again. If the solution above doesn't work, contact your local authorized dealer.
001> P00-00 ERR5 Pr Changing	AC drive parameter changing	A setting cannot be made because a parameter is being modified. 1. Verify if the parameter is being modified. If it is not being modified, try to set up that parameter again. If the solution above doesn't work, contact your local authorized dealer.
001> P00-00 ERR6 Fault Code	Fault code	A setting cannot be made because an error has occurred on the motor drive. 1. Verify if there's any error occurred on the motor drive. If there isn't any error, try to make the setting again. If the solution above doesn't work, contact your local authorized dealer.
001> P00-00 ERR7 Warning Code	Warning code	A setting cannot be made because of a warning message given to the motor drive. 1. Verify if there's any warning message given to the motor drive. If the solution above doesn't work, contact your local authorized dealer.
001> P00-00 ERR8 Type Dismatch	File type dismatch	Data need to be copied are not same type, so the setting cannot be made. 1. Verify if the products' serial numbers need to be copied fall in the category. If they are in the same category, try to make the setting again. If the solution above doesn't work, contact your authorized dealer.

LCM Display *	Description	Corrective Actions
001> P00-00 ERR9 Password Lock	File is locked with password	A setting cannot be made, because some data are locked. 1. Verify if the data are unlocked or able to be unlocked. If the data are unlocked, try to make the setting again. 2. Shut down the system, wait for ten minutes, and then power on again the system. If none of the solution above works, contact your local authorized dealer.
001> P00-00 ERR10 Password Fail	File version dismatch	A setting cannot be made because the password is incorrect. 1. Verify if the password is correct. If the password is correct, try to make the setting again. 2. Shut down the system, wait for ten minutes, and then power on again the system. If none of the solution above works, contact your local authorized dealer.
001> P00-00 ERR11 Version Fail	AC drive copy function time-out	A setting cannot be made, because the version of the data is incorrect. 1. Verify if the version of the data matches the motor drive. If it matches, try to make the setting again. If none of the solution above works, contact your local authorized dealer.
001> P00-00 ERR12 VFD Time Out	Other keypad error	A setting cannot be made, because data copying timeout expired. 1. Redo data copying. 2. Verify if copying data is authorized. If it is authorized, try again to copy data. 3. Shut down the system, wait for ten minutes, and then power on again the system. If none of the solution above works, contact your local authorized dealer.

※ The content in this chapter only applies on V1.01 and above of KPC-CC01 keypad.

10-5 Functions not supported when using TPEditor with KPC-CC01

1. Local Page Setting and Global Setting functions are not supported.

2. [Communication]→[Read from TP] functions are not supported.

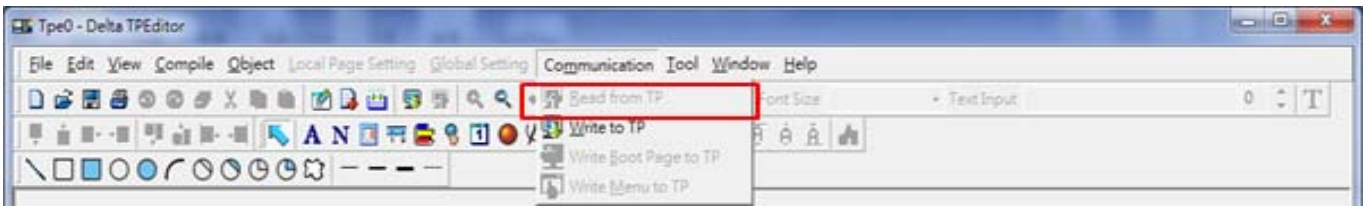

3. In RTC Display Setting, the Refer Device cannot be modified.

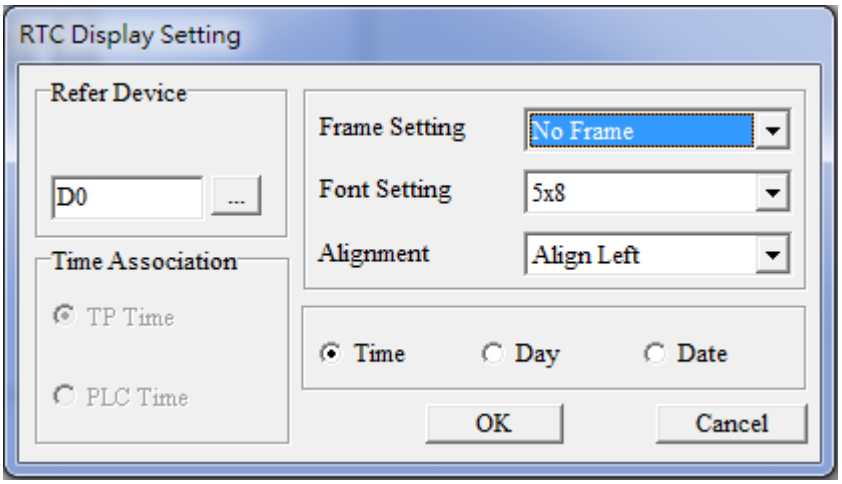

[The page intentionally left blank]

Chapter 11 Summary of Parameter Settings

This chapter provides summary of parameter settings for user to gather the parameter setting ranges, factory settings and set parameters. The parameters can be set, changed and reset by the digital keypad.

NOTE

1） ✓: the parameter can be set during operation

2） For more detail on parameters, please refer to Ch12 Description of Parameter Settings.

00 Drive Parameters

NOTE IM: Induction Motor; PM: Permanent Magnet Motor

	Pr.	Explanation	Settings	Factory Setting
	00-00	Identity Code of the AC Motor Drive	575V: 505: 575V, 1.5KW, 2HP 506: 575V, 2.2KW, 3HP 507: 575V, 3.7KW, 5HP 508: 575V, 5.5KW, 7.5HP 509: 575V, 7.5KW, 10HP 510: 575V, 11KW, 15HP 511: 575V, 15KW, 20HP 690V: 612: 690V, 18.5KW, 25HP 613: 690V, 22 KW, 30HP 614: 690V, 30 KW, 40HP 615: 690V, 37 KW, 50HP 616: 690V, 45 KW, 60HP 617: 690V, 55 KW, 75HP 618: 690V, 75 KW, 100HP 619: 690V, 90 KW, 125HP 620: 690V, 110 KW, 150HP 621: 690V, 132 KW, 175HP 622: 690V, 160 KW , 215HP 686: 690V, 200 KW, 270HP 687: 690V, 250 KW, 335HP 626: 690V, 315 KW, 425HP 628: 690V, 400 KW, 530HP 629: 690V, 450 KW, 600HP 631: 690V, 560 KW, 745HP 632 690V, 630 KW, 850HP	Read only
	00-01	Display AC Motor Drive Rated Current	Display by models	Read only
	00-02	Parameter Reset	0: No function 1: Parameter write protect 5: Reset KWH display to 0 6: Reset PLC (including CANopen Master Index) 7: Reset CANopen Index (Slave) 8: No function 9: All parameters are reset to factory settings(base frequency is 50Hz) 10: All parameters are reset to factory settings (base frequency is 60Hz	0
✓	00-03	Start-up Display Selection	0: F (frequency command) 1: H (output frequency) 2: U (multi-function display, see Pr.00-04) 3: A (output current)	0

	Pr.	Explanation	Settings	Factory Setting
✓	00-04	Content of Multi-function Display	0: Display output current (A) (Unit: Amps) 1: Display counter value (c) (Unit: CNT) 2: Display actual output frequency (H.) (Unit: Hz) 3: Display DC-BUS voltage (v) (Unit: Vdc) 4: Display output voltage (E) (Unit: Vac) 5: Display output power angle (n) (Unit: deg) 6: Display output power in kW (P) (Unit: kW) 7: Display actual motor speed rpm (r) (Unit: rpm) 8: Display estimate output torque % (t) (Unit: %) 9: Display PG feedback (G) (refer to Pr.10-00,10-01) (Unit: PLS) 10: Display PID feedback (b) (Unit: %) 11: Display AVI in % (1.) (Unit: %) 12: Display ACI in % (2.) (Unit: %) 13: Display AUI in % (3.) (Unit: %) 14: Display the temperature of IGBT in ℃ (i.) (Unit: ℃) 15: Display the temperature of capacitance in ℃ (c.) (Unit: ℃) 16: The status of digital input (ON/OFF) (i) 17: The status of digital output (ON/OFF) (o) 18: Multi-step speed (S) 19: The corresponding CPU pin status of digital input (d) 20: The corresponding CPU pin status of digital output (0.) 21: Actual motor position (PG1 of PG card) (P.) 22: Pulse input frequency (PG2 of PG card) (S.) 23: Pulse input position (PG2 of PG card) (q.) 24: Position command tracing error (E.) 25: Overload count (0.00~100.00%) (o.) (Unit: %) 26: Ground Fault GFF(G.) (Unit: %) 27: DC Bus voltage ripple (Unit: Vdc) (r.) 28: Display PLC data D1043 (C) 29: Display PM motor pole section (EMC-PG01U application) (4.) 30: Display output of user defined (U) 31: Display Pr.00-05 user Gain(K) 32: Number of actual motor revolution during operation (PG card plug in and Z phase signal input) (Z.) 33: Motor actual position during operation (when PG card is connected)(q) 34: Operation speed of fan (F.) (Unit: %) 35: Control Mode display: 0= Speed control mode (SPD), 1= torque control mode (TQR) (t.) 36: Present operating carrier frequency of drive (Hz) (J.) 37: Reserved 38: Display drive status (6.) 39: Display estimated output torque, positive and negative, using Nt-m as unit (t 0.0: positive torque; -0.0: negative torque (C.) 40: Torque Command (L) (Unit: %) 41: KWH display (J) (Unit: kWH) 42: PID Reference (h.) (Unit: %) 43: PID offset (o.) (Unit: %) 44: PID Output Fcmd(Hz) (b.) (Unit: Hz) 45: Hardware ID	3
✓	00-05	Coefficient Gain in Actual Output Frequency	0~160.00	1.00
	00-06	Software Version	Read only	#.#

	Pr.	Explanation	Settings	Factory Setting
✓	00-07	Parameter Protection Password Input	0~65535 0~4: the times of password attempts	0
✓	00-08	Parameter Protection Password Setting	0 ~ 65535 0: No password protection / password is entered correctly (Pr00-07) 1: Parameter is locked	0
	00-09	Reserved		
	00-10	Control Mode	0: Speed mode	0
	00-11	Control of Speed Mode	0: VF (IM V/f control) 1: VFPG (IM V/f control+ Encoder) 2: SVC(IM Sensorless vector control)	0
	00-12	Point-to-Point Position mode	0: Relative position	Read Only
	00-13	Torque Mode Control	0: TQCPG（IM Torque control + Encoder）	Read Only
	00-14	Reserved		
	00-15	Reserved		
✓	00-16	Load Selection	0: Normal duty 1: Heavy duty 2: Light duty	2
	00-17	Carrier Frequency	(575V) 2-20HP 2~15kHz Normal Duty (690V) 25-745HP 2~9 kHz 850HP 2~9 kHz Heavy Duty (690V) 25-745HP 2~9 kHz 850HP 2~9 kHz Light Duty (690V) 25-745HP 2~9 kHz 850HP 2~9 kHz	4 4 3 4 3 4 3
	00-18	Reserved		
	00-19	PLC Command Mask	Bit 0: Control command by PLC force control Bit 1: Frequency command by PLC force control Bit 2: Position command by PLC force control Bit 3: Torque command by PLC force control	Read only
	00-20	Source of Master Frequency Command（AUTO）	0: Digital keypad 1: RS-485 serial communication 2: External analog input (Pr.03-00) 3: External UP/DOWN terminal 4: Pulse input without direction command (Pr.10-16 without direction) 5: Pulse input with direction command (Pr.10-16) 6: CANopen communication card 7: Reserved 8: Communication card (no CANopen card)	0
	00-21	Source of the Operation Command（AUTO）	0: Digital keypad 1: External terminals. Keypad STOP disabled. 2: RS-485 serial communication. Keypad STOP disabled. 3: CANopen communication card 4: Reserved 5: Communication card (no CANopen card)	0
✓	00-22	Stop Method	0: Ramp to stop 1: Coast to stop	0
✓	00-23	Control of Motor Direction	0: Enable forward/reverse 1: Reverse disable 2: Forward disable	0

	Pr.	Explanation	Settings	Factory Setting
	00-24	Memory of Digital Operator (Keypad) Frequency Command	Read only	Read only
✓	00-25	User Defined Characteristics	Bit 0~3: user defined decimal place 0000b: no decimal place 0001b: one decimal place 0010b: two decimal place 0011b: three decimal place Bit 4~15: user define on unit 000xh: Hz 001xh: rpm 002xh: % 003xh: kg 004xh: m/s 005xh: kW 006xh: HP 007xh: ppm 008xh: 1/m 009xh: kg/s 00Axh: kg/m 00Bxh: kg/h 00Cxh: lb/s 00Dxh: lb/m 00Exh: lb/h 00Fxh: ft/s 010xh: ft/m 011xh: m 012xh: ft 013xh: degC 014xh: degF 015xh: mbar 016xh: bar 017xh: Pa 018xh: kPa 019xh: mWG 01Axh: inWG 01Bxh: ftWG 01Cxh: psi 01Dxh: atm 01Exh: L/s 01Fxh: L/m 020xh: L/h 021xh: m3/s 022xh: m3/h 023xh: GPM 024xh: CFM Xxxxh: Hz	0
	00-26	Max. User Defined Value	0: Disable 0~65535 (when Pr.00-25 set to no decimal place) 0.0~6553.5 (when Pr.00-25 set to 1 decimal place) 0.0~655.35 (when Pr.00-25 set to 2 decimal place) 0.0~65.535 (when Pr.00-25 set to 3 decimal place)	0
	00-27	User Defined Value	Read only	Read Only
	00-28	Reserved		
	00-29	LOCAL/REMOTE Selection	0: Standard HOA function 1: Switching Local/Remote, the drive stops 2: Switching Local/Remote, the drive runs as the REMOTE setting for frequency and operation status 3: Switching Local/Remote, the drive runs as the LOCAL setting for frequency and operation status	0

	Pr.	Explanation	Settings	Factory Setting
			4: Switching Local/Remote, the drive runs as LOCAL setting when switch to Local and runs as REMOTE setting when switch to Remote for frequency and operation status.	
	00-30	Source of the Master Frequency Command（HAND）	0: Digital keypad 1: RS-485 serial communication 2: External analog input (Pr.03-00) 3: External UP/DOWN terminal 4: Pulse input without direction command (Pr.10-16 without direction) 5: Pulse input with direction command (Pr.10-16) 6: CANopen communication card 7: Reserved 8: Communication card (no CANopen card)	0
	00-31	Source of the Operation Command（HAND）	0: Digital keypad 1: External terminals. Keypad STOP disabled. 2: RS-485 serial communication. Keypad STOP disabled. 3: CANopen communication card 4: Reserved 5: Communication card (not include CANopen card)	0
✓	00-32	Digital Keypad STOP Function	0: STOP key disable 1: STOP key enable	0
	00-33 ~ 00-39	Reserved		
✓	00-40	Homing mode	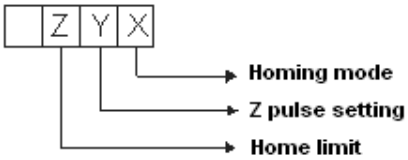	0000
			X: Note: Forward run = closckwise (CW) Reverse run = counterclockwise (CCW) 0: Forward run to home. Set PL forward limit as check point. 1: Reverse run (CCW) to home. Set NL reverse limit (CCWL) as check point. 2: Forward run to home. Set ORG : OFF→ON as check point. 3: Reverse to home. Set ORG : OFF→ON as check point. 4: Forward run and search for Z-pulse as check point. 5: Forward run and search for Z-pulse as check point. 6: Forward run to home. Set ORG: ON→OFF as check point. 7: Reverse run to home. Set ORG : ON→OFF as check point. 8: Define current position as home.	
			Y: Set X to 0, 1, 2, 3, 6, 7 first. 0: reverse run to Z pulse 1: continue forward run to Z pulse 2: Ignore Z pulse	
			Z: When home limit is reached, set X to 2, 3, 4, 5, 6, 7 first. 0: display the error 1: reverse the direction	

	Pr.	Explanation	Settings	Factory Setting
✓	00-41	Homing by frequency 1	0.00~599.00Hz	8.00
✓	00-42	Homing by frequency 2	0.00~599.00Hz	2.00
	00-43 ~ 00-47	Reserved		
✓	00-48	Display Filter Time (Current)	0.001~65.535 sec	0.100
✓	00-49	Display Filter Time (Keypad)	0.001~65.535 sec	0.100
	00-50	Software Version (date)	Read only	#####
	00-51 ~ 00-61	Reserved		

01 Basic Parameters

	Pr.	Explanation	Settings	Factory Setting
	01-00	Max. Operation Frequency	0.00~599.00Hz	60.00/ 50.00
	01-01	Output Frequency of Motor 1	0.00~599.00Hz	60.00/ 50.00
	01-02	Output Voltage of Motor 1	575V: 0.0V~600.0V 690V: 0.0V~765.0V	500.0 660.0
	01-03	Mid-point Frequency 1 of Motor 1	0.00~599.00Hz	3.00
✓	01-04	Mid-point Voltage 1 of Motor 1	575V: 0.0V~600.0V 690V: 0.0V~720.0V	0.0
	01-05	Mid-point Frequency 2 of Motor 1	0.00~599.00Hz	1.50
✓	01-06	Mid-point Voltage 2 of Motor 1	575V: 0.0V~6000V 690V: 0.0V~720.0V	0.0
	01-07	Min. Output Frequency of Motor 1	0.00~599.00Hz	0.50
✓	01-08	Min. Output Voltage of Motor 1	575V: 0.0V~600.0V 690V: 0.0V~720.0V	0.0
	01-09	Start-Up Frequency	0.00~599.00Hz	0.50
✓	01-10	Output Frequency Upper Limit	0.00~599.00Hz	599.00
✓	01-11	Output Frequency Lower Limit	0.00~599.00Hz	0
✓	01-12	Accel. Time 1	01-45=0: 0.00~600.00s 01-45=1: 0.00~6000.0s 30HP and above: 60.00/60.0 215HP and above: 80.00/80.0	10.00 10.0
✓	01-13	Decel Time 1	01-45=0: 0.00~600.00s 01-45=1: 0.00~6000.0s 30HP and above: 60.00/60.0 215HP and above: 80.00/80.0	10.00 10.0
✓	01-14	Accel Time 2	01-45=0: 0.00~600.00s 01-45=1: 0.00~6000.0s 30HP and above: 60.00/60.0 215HP and above: 80.00/80.0	10.00 10.0
✓	01-15	Decel Time 2	01-45=0: 0.00~600.00s 01-45=1: 0.00~6000.0s 30HP and above: 60.00/60.0 215HP and above: 80.00/80.0	10.00 10.0
✓	01-16	Accel Time 3	01-45=0: 0.00~600.00s 01-45=1: 0.00~6000.0s 30HP and above: 60.00/60.0 215HP and above: 80.00/80.0	10.00 10.0
✓	01-17	Decel Time 3	01-45=0: 0.00~600.00s 01-45=1: 0.00~6000.0s 30HP and above: 60.00/60.0 215HP and above: 80.00/80.0	10.00 10.0
✓	01-18	Accel Time 4	01-45=0: 0.00~600.00s 01-45=1: 0.00~6000.0s 30HP and above: 60.00/60.0 215HP and above: 80.00/80.0	10.00 10.0
✓	01-19	Decel Time 4	01-45=0: 0.00~600.00s 01-45=1: 0.00~6000.0s 30HP and above: 60.00/60.0 215HP and above: 80.00/80.0	10.00 10.0
✓	01-20	JOG Acceleration Time	01-45=0：0.00~600.00s 01-45=1：0.00~6000.0s 30HP and above: 60.00/60.0 215HP and above: 80.00/80.0	10.00 10.0

	Pr.	Explanation	Settings	Factory Setting
✓	01-21	JOG Deceleration Time	01-45=0: 0.00~600.00s 01-45=1: 0.00~6000.0s 30HP and above: 60.00/60.0 215HP and above: 80.00/80.0	10.00 10.0
✓	01-22	JOG Frequency	0.00~599.00Hz	6.00
✓	01-23	1st/4th Accel/decel Frequency	0.00~599.00Hz	0.00
✓	01-24	S-curve Acceleration Begin Time 1	Pr.01-45=0: 0.00~25.00 second Pr.01-45=1: 0.0~250.0 second	0.20 0.2
✓	01-25	S-curve Acceleration Arrival Time 2	Pr.01-45=0: 0.00~25.00 second Pr.01-45=1: 0.0~250.0 second	0.20 0.2
✓	01-26	S-curve Deceleration Begin Time 1	Pr.01-45=0: 0.00~25.00 second Pr.01-45=1: 0.0~250.0 second	0.20 0.2
✓	01-27	S-curve Deceleration Arrival Time 2	Pr.01-45=0: 0.00~25.00 second Pr.01-45=1: 0.0~250.0 second	0.20 0.2
	01-28	Skip Frequency 1 (upper limit)	0.00~599.00Hz	0.00
	01-29	Skip Frequency 1 (lower limit)	0.00~599.00Hz	0.00
	01-30	Skip Frequency 2 (upper limit)	0.00~599.00Hz	0.00
	01-31	Skip Frequency 2 (lower limit)	0.00~599.00Hz	0.00
	01-32	Skip Frequency 3 (upper limit)	0.00~599.00Hz	0.00
	01-33	Skip Frequency 3 (lower limit)	0.00~599.00Hz	0.00
	01-34	Zero-speed Mode	0: Output waiting 1: Zero-speed operation 2: Fmin (Refer to Pr.01-07, 01-41)	0
	01-35	Output Frequency of Motor 2	0.00~599.00Hz	60.00/ 50.00
	01-36	Output Voltage of Motor 2	575V: 0.0V~637.0V 690V: 0.0V~765.0V	660.0
	01-37	Mid-point Frequency 1 of Motor 2	0.00~599.00Hz	3.00
✓	01-38	Mid-point Voltage 1 of Motor 2	575V: 0.0V~637.0V 690V: 0.0V~720.0V	0.0
	01-39	Mid-point Frequency 2 of Motor 2	0.00~599.00Hz	1.50
✓	01-40	Mid-point Voltage 2 of Motor 2	575V: 0.0V~637.0V 690V: 0.0V~720.0V	0.0
	01-41	Min. Output Frequency of Motor 2	0.00~599.00Hz	0.50
✓	01-42	Min. Output Voltage of Motor 2	575V: 0.0V~637.0V 690V: 0.0V~720.0V	0.0
	01-43	V/f Curve Selection	0: V/f curve determined by Pr.01-00~01-08 1: 1.5th V/F curve 2: 2nd V/F curve	0
✓	01-44	Optimal Acceleration/Deceleration Setting	0: Linear accel. /decel. 1: Auto accel.; linear decel. 2: Linear accel.; auto decel. 3: Auto accel./decel. 4: Linear, stall prevention by auto accel./decel. (limit by Pr.01-12~01-21)	0
	01-45	Time Unit for Accel. /Decel. and S Curve	0: Unit: 0.01 sec 1: Unit: 0.1 sec	0
✓	01-46	CANopen Quick Stop Time	Pr. 01-45=0: 0.00~600.00 sec Pr. 01-45=1: 0.0~6000.0 sec	1.00

02 Digital Input/Output Parameters

Pr.	Explanation	Settings	Factory Setting
02-00	2-wire/3-wire Operation Control	0: 2-wire mode 1, power on for operation control 1: 2-wire mode 2, power on for operation control 2: 3-wire, power on for operation control	0
02-01	Multi-function Input Command 1 (MI1)	0: No function	1
02-02	Multi-function Input Command 2 (MI2)	1: Multi-step speed command 1/multi-step position command 1	2
02-03	Multi-function Input Command 3 (MI3)	2: Multi-step speed command 2/multi-step position command 2	3
02-04	Multi-function Input Command 4 (MI4)	3: Multi-step speed command 3/multi-step position command 3	4
02-05	Multi-function Input Command 5 (MI5)	4: Multi-step speed command 4/multi-step position command 4	0
02-06	Multi-function Input Command 6 (MI6)	5: Reset	0
02-07	Multi-function Input Command 7 (MI7)	6: JOG command（By KPC-CC01 or external control）	0
02-08	Multi-function Input Command 8 (MI8)	7: Acceleration/deceleration speed inhibit	0
02-26	Input terminal of I/O extension card (MI10)	8: The 1st, 2nd acceleration/deceleration time selection	0
02-27	Input terminal of I/O extension card (MI11)	9: The 3rd, 4th acceleration/deceleration time selection	0
02-28	Input terminal of I/O extension card (MI12)	10: EF Input (Pr.07-20)	0
02-29	Input terminal of I/O extension card (MI13)	11: B.B input from external (Base Block)	0
02-30	Input terminal of I/O extension card (MI14)	12: Output stop	0
02-31	Input terminal of I/O extension card (MI15)	13: Cancel the setting of optimal accel. /decel. time	0
		14: Switch between motor 1 and motor 2	
		15: Operation speed command from AVI	
		16: Operation speed command from ACI	
		17: Operation speed command from AUI	
		18: Emergency stop (Pr.07-20)	
		19: Digital up command	
		20: Digital down command	
		21: PID function disabled	
		22: Clear counter	
		23: Input the counter value (MI6)	
		24: FWD JOG command	
		25: REV JOG command	
		26: TQC/FOCmodel selection	
		27: ASR1/ASR2 selection	
		28: Emergency stop (EF1)	
		29: Signal confirmation for Y-connection	
		30: Signal confirmation for Δ-connection	
		31: High torque bias (Pr.11-30)	
		32: Middle torque bias (Pr.11-31)	
		33: Low torque bias (Pr.11-32)	
		34: Switch between multi-step position and multi-speed control	
		35: Enable single point position control	
		36: Enable multi-step position learning function (valid at stop)	
		37: Full position control pulse command input enable	
		38: Disable EEPROM write function	

	Pr.	Explanation	Settings	Factory Setting
			39: Torque command direction	
			40: Force coast to stop	
			41: HAND switch	
			42: AUTO switch	
			43: Enable resolution selection (Pr.02-48)	
			44: Reversed direction homing	
			45: Forward direction homing	
			46: Homing (ORG)	
			47: Homing function enable	
			48: Mechanical gear ratio switch	
			49: Drive enable	
			50: Slave dEb action to execute	
			51: Selection for PLC mode bit0	
			52: Selection for PLC mode bit1	
			53: Trigger CANopen quick stop	
			54: Reserved	
			55: Brake release	
			56: Local/Remote Selection	
			57~70: Reserved	
✓	02-09	UP/DOWN key mode	0: up/down by the accel. /decel. time 1: up/down constant speed (Pr.02-10)	0
✓	02-10	Constant speed. The Accel. /Decel. Speed of the UP/DOWN Key	0.001~1.000Hz/ms	0.001
✓	02-11	Digital Input Response Time	0.000~30.000 second	0.005
✓	02-12	Digital Input Mode Selection	0000h~FFFFh (0: N.O.; 1: N.C.)	0000
✓	02-13	Multi-function Output 1 RY1	0: No function	11
✓	02-14	Multi-function Output 2 RY2	1: Operation Indication	1
✓	02-16	Multi-function Output 3 (MO1)	2: Operation speed attained	66
✓	02-17	Multi-function Output 4 (MO2)	3: Desired frequency attained 1 (Pr.02-22)	0
✓	02-36	Output terminal of the I/O extension card (MO10)	4: Desired frequency attained 2 (Pr.02-24)	0
✓	02-37	Output Terminal of I/O Extension Card (MO11)	5: Zero speed (Frequency command)	0
✓	02-38	Output Terminal of I/O Extension Card (MO12)	6: Zero speed, include STOP(Frequency command)	0
✓	02-39	Output Terminal of I/O Extension Card (MO13)	7: Over torque 1(Pr.06-06~06-08)	0
✓	02-40	Output Terminal of I/O Extension Card (MO14)	8: Over torque 2(Pr.06-09~06-11)	0
✓	02-41	Output Terminal of I/O Extension Card (MO15)	9: Drive is ready	0
✓	02-42	Output Terminal of I/O Extension Card (MO16)	10: Low voltage warning（LV）(Pr.06-00)	0
✓	02-43	Output Terminal of I/O Extension Card (MO17)	11: Malfunction indication	0
✓	02-44	Output Terminal of I/O Extension Card (MO18)	12: Mechanical brake release(Pr.02-32)	0
✓	02-45	Output Terminal of I/O Extension Card (MO19)	13: Overheat warning (Pr.06-15)	0
✓	02-46	Output Terminal of I/O Extension Card (MO20)	14: Software brake signal indication(Pr.07-00)	0
			15: PID feedback error (Pr.08-13, Pr.08-14)	
			16: Slip error (oSL)	
			17: Terminal count value attained, does not return to 0 (Pr.02-20)	

	Pr.	Explanation	Settings	Factory Setting
			18: Preliminary count value attained, returns to 0 (Pr.02-19)	
			19: Base Block	
			20: Warning output	
			21: Over voltage warning	
			22: Over-current stall prevention warning	
			23: Over-voltage stall prevention warning	
			24: Operation mode indication	
			25: Forward command	
			26: Reverse command	
			27: Output when current >= Pr.02-33	
			28: Output when current < Pr.02-33	
			29: Output when frequency >= Pr.02-34	
			30: Output when frequency < Pr.02-34	
			31: Y-connection for the motor coil	
			32: △-connection for the motor coil	
			33: Zero speed (actual output frequency)	
			34: Zero speed include stop(actual output frequency)	
			35: Error output selection 1(Pr.06-23)	
			36: Error output selection 2(Pr.06-24)	
			37: Error output selection 3(Pr.06-25)	
			38: Error output selection 4(Pr.06-26)	
			39: Position attained (Pr.10-19)	
			40: Speed attained (including Stop)	
			41: Multi-position attained	
			42: Crane function	
			43: Actual motor speed slower than Pr.02-47	
			44: Low current output (use with Pr.06-71~06-73)	
			45: UVW Output Electromagnetic valve Switch	
			46: Master dEb warning output	
			47: Closed brake output	
			48: Reserved	
			49: Homing action complete	
			50: Output for CANopen control	
			51: Output for RS-485	
			52: Output for communication card	
			53~64: Reserved	
			65: Output for both Can & 485 control	
			66: SO logic A	
			67: Analog input level reached	
			68: SO logic B	
	02-15	Reserved		
✓	02-18	Multi-function output direction	0000h~FFFFh (0: N.O.; 1: N.C.)	0000
✓	02-19	Terminal counting value attained (returns to 0)	0~65500	0
✓	02-20	Preliminary counting value attained (not return to 0)	0~65500	0
✓	02-21	Digital Output Gain (DFM)	1~166	1
✓	02-22	Desired Frequency Attained 1	0.00~599.00Hz	60.00/ 50.00
✓	02-23	The Width of the Desired Frequency Attained 1	0.00~599.00Hz	2.00
✓	02-24	Desired Frequency Attained 2	0.00~599.00Hz	60.00/ 50.00
✓	02-25	The Width of the Desired Frequency Attained 2	0.00~599.00Hz	2.00
	02-32	Brake Delay Time	0.000~65.000 sec.	0.000

	Pr.	Explanation	Settings	Factory Setting
✓	02-33	Output Current Level Setting for Multi-function External Terminals	0~100%	0
✓	02-34	Output frequency setting for multi-function output terminal	0.00~599.00Hz（Motor speed when using PG Card）	0.00
✓	02-35	External Operation Control Selection after Reset and Activate	0: Disable 1: Drive runs if run command exists after reset	0
✓	02-47	Zero-speed Level of Motor	0~65535 rpm	0
✓	02-48	Max. Frequency of Resolution Switch	0.01~599.00Hz	60.00
✓	02-49	Switch the delay time of Max. output frequency	0~65000 ms	0
	02-50	Status of Multi-function Input Terminal	Monitor the status of multi-function input terminals	Read only
	02-51	Status of Multi-function Output Terminal	Monitor the status of multi-function output terminals	Read only
	02-52	Display External Output terminal occupied by PLC	Monitor the status of PLC input terminals	Read only
	02-53	Display External Multi-function Output Terminal occupied by PLC	Monitor the status of PLC output terminals	Read only
	02-54	Display the Frequency Command Executed by External Terminal	0.01~599.00Hz (Read only)	Read only
	02-55	Reserved		
	02-56	Release Brake Check	0.000~65.000 sec.	0.000
✓	02-57	Multi-function output terminal: Function 42: Brake Current Checking Point	0~100%	0
✓	02-58	Multi-function output terminal: Function 42: Brake Frequency Checking Point	0.00~3.00Hz	0.00
	02-59 ~ 02-69	Reserved		
	02-70	IO card types	0：NO IO card 1：EMC-BPS01 2：NO IO card 3：NO IO card 4：EMC-D611A 5：EMC-D42A 6：EMC-R6AA 7：NO IO card	Read only

03 Analog Input/Output Parameters

	Pr.	Explanation	Settings	Factory Setting
✓	03-00	Analog Input Selection (AVI)	0: No function	1
✓	03-01	Analog Input Selection (ACI)	1: Frequency command (speed limit under torque control mode)	0
✓	03-02	Analog Input Selection (AUI)	2: Torque command (torque limit under speed mode)	0
			3: Torque offset command	
			4: PID target value	
			5: PID feedback signal	
			6: PTC thermistor input value	
			7: Positive torque limit	
			8: Negative torque limit	
			9: Regenerative torque limit	
			10: Positive/negative torque limit	
			11: PT100 thermistor input value	
			12: Reserved	
			13: PID Offset (%) (h.)	
			14~20: Reserved	
✓	03-03	Analog Input Bias (AVI)	-100.0~100.0%	0
✓	03-04	Analog Input Bias (ACI)	-100.0~100.0%	0
✓	03-05	Analog Positive Voltage Input Bias (AUI)	-100.0~100.0%	0
	03-06	Reserved		
✓	03-07	Positive/negative Bias Mode (AVI)	0: No bias 1: Lower than or equal to bias 2: Greater than or equal to bias 3: The absolute value of the bias voltage while serving as the center 4: Serve bias as the center	0
✓	03-08	Positive/negative Bias Mode (ACI)		
✓	03-09	Positive/negative Bias Mode (AUI)		
	03-10	Analog Frequency Command for Reverse Run	0: Negative frequency is not valid. Forward and reverse run is controlled by digital keypad or external terminal. 1: Neagtive frequency is valid. Positive frequency = forward run; negative frequency = reverse run. Direction can not be switched by digital keypad or external teriminal control.	0
✓	03-11	Analog Input Gain (AVI)	-500.0~500.0%	100.0
✓	03-12	Analog Input Gain (ACI)	-500.0~500.0%	100.0
✓	03-13	Analog Positive Input Gain (AUI)	-500.0~500.0%	100.0
✓	03-14	Analog Negative Input Gain (AUI)	-500.0~500.0%	100.0
✓	03-15	Analog Input Filter Time (AVI)	0.00~20.00 sec.	0.01
✓	03-16	Analog Input Filter Time (ACI)	0.00~20.00 sec.	0.01
✓	03-17	Analog Input Filter Time (AUI)	0.00~20.00 sec.	0.01
✓	03-18	Addition Function of the Analog Input	0: Disable (AVI, ACI, AUI) 1: Enable	0

	Pr.	Explanation	Settings	Factory Setting
✓	03-19	ACI Signal Loss	0: Disable 1: Continue operation at the last frequency 2: Decelerate to 0Hz 3: Stop immediately and display ACE	0
✓	03-20	Multi-function Output 1 (AFM1)	0: Output frequency (Hz)	0
✓	03-23	Multi-function Output 2 (AFM2)	1: Frequency command (Hz)	0
			2: Motor speed (Hz)	
			3: Output current (rms)	
			4: Output voltage	
			5: DC Bus voltage	
			6: Power factor	
			7: Power	
			8: Output torque	
			9: AVI	
			10: ACI	
			11: AUI	
			12: Iq current	
			13: Iq feedback value	
			14: Id current	
			15: Id feedback value	
			16: Vq-axis voltage	
			17: Vd-axis voltage	
			18: Torque command	
			19: PG2 frequency command	
			20: CANopen analog output	
			21: RS485 analog output	
			22: Communication card analog output	
			23: Constant voltage/current output	
			24: Reserved	
			25: CAN & 485 output	
✓	03-21	Gain of Analog Output 1 (AFM1)	0~500.0%	100.0
✓	03-22	Analog Output 1 when in REV Direction (AFM1)	0: Absolute output voltage 1: Reverse output 0V; Positive output 0-10V 2: Reverse output 5-0V; Positive output 5-10V	0
✓	03-24	Gain of Analog Output 2 (AFM2)	0~500.0%	100.0
✓	03-25	Analog Output 2 when in REV Direction (AFM2)	0: Absolute output voltage 1: Output 0V in REV direction; output 0-10V in FWD direction 2: Output 5-0V in REV direction; output 5-10V in FWD direction	0
✓	03-26	Reserved		
✓	03-27	AFM2 Output Bias	-100.00~100.00%	0.00
✓	03-28	AVI Selection	0: 0-10V 1: 0-20mA 2: 4-20mA	0
✓	03-29	ACI Selection	0: 4-20mA 1: 0-10V 2: 0-20mA	0
	03-30	Status of PLC Output Terminal	Monitor the status of PLC output terminals	Read only
✓	03-31	AFM2 0-20mA Output Selection	0: 0-20mA Output 1: 4-20mA Output	0
✓	03-32	AFM1 DC output setting level	0.00~100.00%	0.00

	Pr.	Explanation	Settings	Factory Setting
✓	03-33	AFM2 DC Output Setting Level	0.00~100.00%	0.00
	03-34	Reserved		
✓	03-35	AFM1 filter output time	0.00 ~ 20.00 Seconds	0.01
✓	03-36	AFM2 filter output time	0.00 ~ 20.00 Seconds	0.01
	03-37 ~ 03-43	Reserve		
✓	03-44	MO by source of AI level	0: AVI 1: ACI 2: AUI	0
✓	03-45	AI upper level	-100%~100.00%	50%
✓	03-46	AI lower level	-100%~100.00%	10%
	03-47 ~ 03-49	Reserve		
✓	03-50	Analog Input Curve Selection	0: Regular Curve 1: 3 point curve of AVI 2: 3 point curve of ACI 3: 3 point curve of AVI & ACI 4: 3 point curve of AUI 5: 3 point curve of AVI & AUI 6: 3 point curve of ACI & AUI 7: 3 point curve of AVI & ACI & AUI	0
✓	03-51	AVI Low Point	Pr.03-28=0, 0.00~10.00V Pr.03-28≠0, 0.00~20.00mA	0.00
✓	03-52	AVI Proportional Low Point	-100.00~100.00%	0.00
✓	03-53	AVI Mid Point	Pr.03-28=0, 0.00~10.00V Pr.03-28≠0, 0.00~20.00mA	5.00
✓	03-54	AVI Proportional Mid Point	-100.00~100.00%	50.00
✓	03-55	AVI High Point	Pr.03-28=0, 0.00~10.00V Pr.03-28≠0, 0.00~20.00mA	10.00
✓	03-56	AVI Proportional High Point	-100.00~100.00%	100.00
✓	03-57	ACI Low Point	Pr.03-29=1, 0.00~10.00V Pr.03-29≠1, 0.00~20.00mA	4.00
✓	03-58	ACI Proportional Low Point	-100.00~100.00%	0.00
✓	03-59	ACI Mid Point	Pr.03-29=1, 0.00~10.00V Pr.03-29≠1, 0.00~20.00mA	12.00
✓	03-60	ACI Proportional Mid Point	-100.00~100.00%	50.00
✓	03-61	ACI High Point	Pr.03-29=1, 0.00~10.00V Pr.03-29≠1, 0.00~20.00mA	20.00
✓	03-62	ACI Proportional High Point	-100.00~100.00%	100.00
✓	03-63	Positive AUI Voltage Low Point	0.00~10.00V	0.00
✓	03-64	Positive AUI Voltage Proportional Low Point	-100.00%~100.00%	0.00
✓	03-65	Positive AUI Voltage Mid Point	0.00~10.00V	5.00
✓	03-66	Positive AUI Voltage Proportional Mid Point	-100.00%~100.00%	50.00
✓	03-67	Positive AUI Voltage High Point	0.00~10.00V	10.00

	Pr.	Explanation	Settings	Factory Setting
✓	03-68	Positive AUI Voltage Proportional High Point	-100.00%~100.00%	100.00
✓	03-69	Negative AUI Voltage Low Point	-10.00V~0.00	0.00
✓	03-70	Negative AUI Voltage Proportional Low Point	-100.00%~100.00%	0.00
✓	03-71	Negative AUI Voltage Mid Point	0.00~ -10.00V	-5.00
✓	03-72	Negative AUI Voltage Proportional Mid Point	-100.00%~100.00%	-50.00
✓	03-73	Negative AUI Voltage High Point	0.00~ -10.00V	-10.00
✓	03-74	Negative AUI Voltage Proportional High Point	-100.00%~100.00%	-100.00

04 Multi-step Speed Parameters

	Pr.	Explanation	Settings	Factory Setting
✓	04-00	1st Step Speed Frequency	0.00~599.00Hz	0
✓	04-01	2nd Step Speed Frequency	0.00~599.00Hz	0
✓	04-02	3rd Step Speed Frequency	0.00~599.00Hz	0
✓	04-03	4th Step Speed Frequency	0.00~599.00Hz	0
✓	04-04	5th Step Speed Frequency	0.00~599.00Hz	0
✓	04-05	6th Step Speed Frequency	0.00~599.00Hz	0
✓	04-06	7th Step Speed Frequency	0.00~599.00Hz	0
✓	04-07	8th Step Speed Frequency	0.00~599.00Hz	0
✓	04-08	9th Step Speed Frequency	0.00~599.00Hz	0
✓	04-09	10th Step Speed Frequency	0.00~599.00Hz	0
✓	04-10	11th Step Speed Frequency	0.00~599.00Hz	0
✓	04-11	12th Step Speed Frequency	0.00~599.00Hz	0
✓	04-12	13th Step Speed Frequency	0.00~599.00Hz	0
✓	04-13	14th Step Speed Frequency	0.00~599.00Hz	0
✓	04-14	15th Step Speed Frequency	0.00~599.00Hz	0
✓	04-15	Position command 1 (rotation)	-30000~30000	0
✓	04-16	Position command 1 (pulse)	-32767~32767	0
✓	04-17	Position command 2 (rotation)	-30000~30000	0
✓	04-18	Position command 2 (pulse)	-32767~32767	0
✓	04-19	Position command 3 (rotation)	-30000~30000	0
✓	04-20	Position command 3 (pulse)	-32767~32767	0
✓	04-21	Position command 4 (rotation)	-30000~30000	0
✓	04-22	Position command 4 (pulse)	-32767~32767	0
✓	04-23	Position command 5 (rotation)	-30000~30000	0
✓	04-24	Position command 5 (pulse)	-32767~32767	0
✓	04-25	Position command 6 (rotation)	-30000~30000	0
✓	04-26	Position command 6 (pulse)	-32767~32767	0
✓	04-27	Position command 7 (rotation)	-30000~30000	0
✓	04-28	Position command 7 (pulse)	-32767~32767	0
✓	04-29	Position command 8 (rotation)	-30000~30000	0
✓	04-30	Position command 8 (pulse)	-32767~32767	0
✓	04-31	Position command 9 (rotation)	-30000~30000	0
✓	04-32	Position command 9 (pulse)	-32767~32767	0
✓	04-33	Position command 10 (rotation)	-30000~30000	0
✓	04-34	Position command 10 (pulse)	-32767~32767	0
✓	04-35	Position command 11 (rotation)	-30000~30000	0
✓	04-36	Position command 11 (pulse)	-32767~32767	0
✓	04-37	Position command 12 (rotation)	-30000~30000	0

	Pr.	Explanation	Settings	Factory Setting
✓	04-38	Position command 12 (pulse)	-32767~32767	0
✓	04-39	Position command 13 (rotation)	-30000~30000	0
✓	04-40	Position command 13 (pulse)	-32767~32767	0
✓	04-41	Position command 14 (rotation)	-30000~30000	0
✓	04-42	Position command 14 (pulse)	-32767~32767	0
✓	04-43	Position command 15 (rotation)	-30000~30000	0
✓	04-44	Position command 15 (pulse)	-32767~32767	0
	04-45 ~ 04-49	Reserve		
✓	04-50	PLC buffer 0	0~65535	0
✓	04-51	PLC buffer 1	0~65535	0
✓	04-52	PLC buffer 2	0~65535	0
✓	04-53	PLC buffer 3	0~65535	0
✓	04-54	PLC buffer 4	0~65535	0
✓	04-55	PLC buffer 5	0~65535	0
✓	04-56	PLC buffer 6	0~65535	0
✓	04-57	PLC buffer 7	0~65535	0
✓	04-58	PLC buffer 8	0~65535	0
✓	04-59	PLC buffer 9	0~65535	0
✓	04-60	PLC buffer 10	0~65535	0
✓	04-61	PLC buffer 11	0~65535	0
✓	04-62	PLC buffer 12	0~65535	0
✓	04-63	PLC buffer 13	0~65535	0
✓	04-64	PLC buffer 14	0~65535	0
✓	04-65	PLC buffer 15	0~65535	0
✓	04-66	PLC buffer 16	0~65535	0
✓	04-67	PLC buffer 17	0~65535	0
✓	04-68	PLC buffer 18	0~65535	0
✓	04-69	PLC buffer 19	0~65535	0

05 Motor Parameters

	Pr.	Explanation	Settings	Factory Setting
	05-00	Motor Auto Tuning	0: No function 1: Rolling test for induction motor(IM) (Rs, Rr, Lm, Lx, no-load current) 2: Static test for induction motor(IM)	0
	05-01	Full-load Current of Induction Motor 1(A)	10~120% of drive's rated current	#.##
✓	05-02	Rated Power of Induction Motor 1(kW)	0~655.35kW	#.##
✓	05-03	Rated Speed of Induction Motor 1 (rpm)	575V: 0~1799(60Hz 4 poles) 0~1499(50Hz 4 poles) 690V: 0~1799(60Hz 4 poles) 0~1499(50Hz 4 poles)	1710 ~1755 1410 ~1455 1760 ~1780 1460 ~1480
	05-04	Pole Number of Induction Motor 1	2~64	4
	05-05	No-load Current of Induction Motor 1 (A)	0~ Pr.05-01 factory setting	#.##
	05-06	Stator Resistance (Rs) of Induction Motor 1	0~65.535Ω	#.###
	05-07	Rotor Resistance (Rr) of Induction Motor 1	0~65.535Ω	#.###
	05-08	Magnetizing Inductance (Lm) of Induction Motor 1	0~6553.5mH	#.#
	05-09	Stator Inductance (Lx) of Induction Motor 1	0~6553.5mH	#.#
	05-10 ~ 05-12	Reserved		
	05-13	Full-load Current of Induction Motor 2 (A)	10~120%	#.##
✓	05-14	Rated Power of Induction Motor 2 (kW)	0~655.35kW	#.##
✓	05-15	Rated Speed of Induction Motor 2 (rpm)	575V： 0~1799(60Hz 4 poles) 0~1499(50Hz 4 poles) 690V： 0~1799(60Hz 4 poles) 0~1499(50Hz 4 poles)	1710 ~1755 1410 ~1455 1760 ~1780 1460 ~1480
	05-16	Pole Number of Induction Motor 2	2~64	4
	05-17	No-load Current of Induction Motor 2 (A)	0~ Pr.05-01 factory setting	#.##
	05-18	Stator Resistance (Rs) of Induction Motor 2	0~65.535Ω	#.###
	05-19	Rotor Resistance (Rr) of Induction Motor 2	0~65.535Ω	#.###
	05-20	Magnetizing Inductance (Lm) of Induction Motor 2	0~6553.5mH	#.#
	05-21	Stator Inductance (Lx) of Induction Motor 2	0~6553.5mH	#.#
	05-22	Induction Motor 1/ 2 Selection	1: motor 1 2: motor 2	1

	Pr.	Explanation	Settings	Factory Setting
✓	05-23	Frequency for Y-connection/△-connection Switch of Induction Motor	0.00~599.00Hz	60.00
	05-24	Y-connection/△-connection Switch of Induction Motor	0: Disable 1: Enable	0
✓	05-25	Delay Time for Y-connection/△-connection Switch of Induction Motor	0.000~60.000 sec.	0.200
	05-26	Accumulative Watt-second of Motor in Low Word (W-sec)	Read only	#.#
	05-27	Accumulative Watt-second of Motor in High Word (W-sec)	Read only	#.#
	05-28	Accumulative Watt-hour of Motor (W-Hour)	Read only	#.#
	05-29	Accumulative Watt-hour of Motor in Low Word (KW-Hour)	Read only	#.#
	05-30	Accumulative Watt-hour of Motor in High Word (KW-Hour)	Read only	#.#
	05-31	Accumulative Motor Operation Time (Min)	00~1439	0
	05-32	Accumulative Motor Operation Time (day)	00~65535	0
	05-33	Induction Motor and Permanent Magnet Motor Selection	0: Induction Motor 1: SPM Permanent Magnet Motor 2: IPM Permanent Magnet Motor	0
	05-34	Full-load current of Permanent Magnet Motor	0.00~655.35Amps	#.##
✓	05-35	Rated Power of Permanent Magnet Motor	0.00~655.35kW	0.00
✓	05-36	Rated speed of Permanent Magnet Motor	0~65535rpm	2000
	05-37	Pole number of Permanent Magnet Motor	0~65535	10
	05-38	Inertia of Permanent Magnet Motor	0.0~6553.5 $kg.cm^2$	0.0
	05-39	Stator Resistance of PM Motor	0.000~65.535Ω	0.000
	05-40	Permanent Magnet Motor Ld	0.00~655.35mH	0.000
	05-41	Permanent Magnet Motor Lq	0.00~655.35mH	0.000
✓	05-42	PG Offset angle of PM Motor	0.0~360.0°	0.0
✓	05-43	Ke parameter of PM Motor	0~65535 (Unit: V/1000rpm)	0

06 Protection Parameters

	Pr.	Explanation	Settings	Factory Setting
✓	06-00	Low Voltage Level	575V: 420.0~520.0Vdc 690V: 450.0~660.0Vdc	470.0 480.0
✓	06-01	Over-voltage Stall Prevention	575V: 0.0~1116.0Vdc 690V: 0.0~1318.0Vdc	920.0 1087.0
✓	06-02	Selection for Over-voltage Stall Prevention	0: Traditional over-voltage stall prevention 1: Smart over-voltage prevention	0
✓	06-03	Over-current Stall Prevention during Acceleration	Normal duty: 0~150% (100%: drive rated current) Heavy duty: 0~180% (100%: drive rated current) Light duty: 0~125% (100%: drive rated current)	120 150 120
✓	06-04	Over-current Stall Prevention during Operation	Normal duty: 0~150% (100%: drive rated current) Heavy duty: 0~180% (100%: drive rated current) Light duty: 0~125% (100%: drive rated current)	120 150 120
✓	06-05	Accel. /Decel. Time Selection of Stall Prevention at Constant Speed	0: by current accel/decel time 1: by the 1st accel/decel time 2: by the 2nd accel/decel time 3: by the 3rd accel/decel time 4: by the 4th accel/decel time 5: by auto accel/decel	0
✓	06-06	Over-torque Detection Selection (OT1)	0: No function 1: Continue operation after Over-torque detection during constant speed operation 2: Stop after Over-torque detection during constant speed operation 3: Continue operation after Over-torque detection during RUN 4: Stop after Over-torque detection during RUN	0
✓	06-07	Over-torque Detection Level (OT1)	10~250% (100%: drive's rated current)	120
✓	06-08	Over-torque Detection Time (OT1)	0.0~60.0s	0.1
✓	06-09	Over-torque Detection Selection (OT2)	0: No function 1: Continue operation after Over-torque detection during constant speed operation 2: Stop after Over-torque detection during constant speed operation 3: Continue operation after Over-torque detection during RUN 4: Stop after Over-torque detection during RUN	0
✓	06-10	Over-torque Detection Level (OT2)	10~250% (100%: drive's rated current)	120
✓	06-11	Over-torque Detection Time (OT2)	0.0~60.0s	0.1
✓	06-12	Current Limit	0~250% (100%: drive's rated current)	170
✓	06-13	Electronic Thermal Relay Selection (Motor 1)	0: Inverter motor (with external forced cooling) 1: Standard motor (motor with fan on the shaft) 2: Disable	2
✓	06-14	Electronic Thermal Characteristic for Motor 1	30.0~600.0 sec.	60.0
✓	06-15	Heat Sink Over-heat (OH) Warning	575V: 0.0~110.0℃ 690V: 0.0~110.0℃ 50HP and below：90.0	105.0
✓	06-16	Stall Prevention Limit Level	0~100% (Pr.06-03, Pr.06-04)	50
	06-17	Fault Record 1 (Present Fault Record)	0: No fault record	0
	06-18	Fault Record 2	1: Over-current during acceleration (ocA)	0
	06-19	Fault Record 3	2: Over-current during deceleration (ocd)	0

Pr.	Explanation	Settings	Factory Setting
06-20	Fault Record 4	3: Over-current during constant speed(ocn)	0
06-21	Fault Record 5	4: Ground fault (GFF)	0
06-22	Fault Record 6	5: IGBT short-circuit (occ)	0
		6: Over-current at stop (ocS)	
		7: Over-voltage during acceleration (ovA)	
		8: Over-voltage during deceleration (ovd)	
		9: Over-voltage during constant speed (ovn)	
		10: Over-voltage at stop (ovS)	
		11: Low-voltage during acceleration (LvA)	
		12: Low-voltage during deceleration (Lvd)	
		13: Low-voltage during constant speed (Lvn)	
		14: Stop mid-low voltage (LvS)	
		15: Phase loss protection (OrP)	
		16: IGBT over-heat (oH1)	
		17: Capacitance over-heat (oH2)	
		18: tH1o (TH1 open: IGBT over-heat protection error)	
		19: tH2o (TH2 open: capacitance over-heat protection error)	
		20: Reserved	
		21: Drive over-load (oL)	
		22: Electronics thermal relay 1 (EoL1)	
		23: Electronics thermal relay 2 (EoL2)	
		24: Motor overheat (oH3) (PTC/PT100)	
		25: Reserved	
		26: Over-torque 1 (ot1)	
		27: Over-torque 2 (ot2)	
		28: Low current (uC)	
		29: Home limit error (LMIT)	
		30: Memory write-in error (cF1)	
		31: Memory read-out error (cF2)	
		32: Reserved	
		33: U-phase current detection error (cd1)	
		34: V-phase current detection error (cd2)	
		35: W-phase current detection error (cd3)	
		36: Clamp current detection error (Hd0)	
		37: Over-current detection error (Hd1)	
		38: Over-voltage detection error (Hd2)	
		39: Ground current detection error (Hd3)	
		40: Auto tuning error (AUE)	
		41: PID feedback loss (AFE)	
		42: PG feedback error (PGF1)	
		43: PG feedback loss (PGF2)	
		44: PG feedback stall (PGF3)	
		45: PG slip error (PGF4)	
		46: Reserved	
		47: Reserved	
		48: Analog current input loss (ACE)	
		49: External fault input (EF)	
		50: Emergency stop (EF1)	
		51: External Base Block (bb)	
		52: Password error (PcodE)	
		53: Reserved	
		54: Communication error (CE1)	
		55: Communication error (CE2)	
		56: Communication error (CE3)	
		57: Communication error (CE4)	
		58: Communication Time-out (CE10)	
		59: Reserved	
		60: Brake transistor error (bF)	

	Pr.	Explanation	Settings	Factory Setting
			61: Y-connection/△-connection switch error (ydc)	
			62: Decel. Energy Backup Error (dEb)	
			63: Slip error (oSL)	
			64: Electromagnet switch error (ryF)	
			65: PG Card Error (PGF5)	
			66-67: Reserved	
			68: Sensorless estimated speed have wrong direction	
			69: Sensorless estimated speed is over speed	
			70: Sensorless estimated speed deviated	
			71: Reserved	
			72: STO Loss 1	
			73: External safety gate S1	
			74~75: Reserved	
			76: STO	
			77: STO Loss 2	
			78: STO Loss 3	
			79~81: Reserved	
			82: U phase output phase loss (OPHL)	
			83: V phase output phase loss (OPHL)	
			84: W phase output phase loss (OPHL)	
			85: PG-02U ABZ hardware disconnection	
			86: PG-02U UVW hardware disconnection	
			87: Derating Error (oL3)	
			88: Reserved	
			89: Initial rotor position detection error	
			90: Inner PLC function is forced to stop	
			91~100: Reserved	
			101: CANopen software disconnect1 (CGdE)	
			102: CAN open software disconnect2 (CHbE)	
			103: Reserved	
			104: CANopen hardware disconnect (CbFE)	
			105: CANopen index setting error (CIdE)	
			106: CANopen slave station number setting error (CAdE)	
			107: CANopen index setting exceed limit (CFrE)	
			108~110: Reserved	
			111: Internal communication overtime error(InrCOM)	
			112: PM sensorless shaft Lock error	
			113~141: Reserved	
✓	06-23	Fault Output Option 1	0~65535(refer to bit table for fault code)	0
✓	06-24	Fault Output Option 2	0~65535(refer to bit table for fault code)	0
✓	06-25	Fault Output Option 3	0~65535(refer to bit table for fault code)	0
✓	06-26	Fault Output Option 4	0~65535(refer to bit table for fault code)	0
✓	06-27	Electronic Thermal Relay Selection 2 (Motor 2)	0: Inverter motor (with external forced cooling) 1: Standard motor (motor with fan on the shaft) 2: Disable	2
✓	06-28	Electronic Thermal Characteristic for Motor 2	30.0~600.0 sec	60.0
✓	06-29	PTC Detection Selection	0: Warn and keep operation 1: Warn and ramp to stop 2: Warn and coast to stop 3: No warning	0
✓	06-30	PTC Level	0.0~100.0%	50.0
	06-31	Frequency Command for Malfunction	0.00~599.00Hz	Read only

	Pr.	Explanation	Settings	Factory Setting
	06-32	Output Frequency at Malfunction	0.00~599.00Hz	Read only
	06-33	Output Voltage at Malfunction	0.0~6553.5 V	Read only
	06-34	DC Voltage at Malfunction	0.0~6553.5 V	Read only
	06-35	Output Current at Malfunction	0.0~6553.5 Amp	Read only
	06-36	IGBT Temperature at Malfunction	-3276.7~3276.7 ℃	Read only
	06-37	Capacitance Temperature at Malfunction	-3276.7~3276.7 ℃	Read only
	06-38	Motor Speed in rpm at Malfunction	-32767~32767 rpm	Read only
	06-39	Torque Command at Malfunction	-3276.7~3276.7 %	Read only
	06-40	Status of Multi-function Input Terminal at Malfunction	0000h~FFFFh	Read only
	06-41	Status of Multi-function Output Terminal at Malfunction	0000h~FFFFh	Read only
	06-42	Drive Status at Malfunction	0000h~FFFFh	Read only
	06-43	Reserved		
✓	06-44	STO Latch Selection	0：STO Latch 1：STO No Latch	0
✓	06-45	Treatment to Output Phase Loss Detection (OPHL)	0: Warn and keep operation 1: Warn and ramp to stop 2: Warn and coast to stop 3: No warning	3
✓	06-46	Deceleration Time of Output Phase Loss	0.000~65.535 sec	0.500
✓	06-47	Current detection level of output phase loss	0.00~100.00%	1.00
✓	06-48	DC Brake Time of Output Phase Loss	0.000~65.535sec	0.000
	06-49	LvX Auto Reset	0: Disable 1: Enable	0
✓	06-50	Time for Input Phase Loss Detection	0.00~600.00 sec	0.20
	06-51	Reserved		
✓	06-52	Ripple of Input Phase Loss	575V model: 0.0~400.0 Vdc 690V model: 0.0~480.0 Vdc	75.0 90.0
✓	06-53	Treatment for the detected Input Phase Loss (OrP)	0: warn and ramp to stop 1: warn and coast to stop	0
	06-54	Reserved		
	06-55	Derating Protection	0: constant rated current and limit carrier wave by load current and temperature 1: constant carrier frequency and limit load current by setting carrier wave 2: constant rated current(same as setting 0), but close current limit	0
✓	06-56	PT100 Detected Level 1	0.000~10.000V	5.000
✓	06-57	PT100 Detected Level 2	0.000~10.000V	7.000
✓	06-58	PT100 Level 1 Frequency Protect	0.00~599.00Hz	0.00
✓	06-59	PT100 activation level delay time	0~6000 sec.	60

	Pr.	Explanation	Settings	Factory Setting
✓	06-60	Software Detection GFF Current Level	0.0~6553.5 %	60.0
✓	06-61	Software Detection GFF Filter Time	0.00~655.35 sec	0.10
	06-62	Reserved		
	06-63	Fault Record 1 (Day)	0~65535 days	Read only
	06-64	Fault Record 1 (Min)	0~1439 min	Read only
	06-65	Fault Record 2 (Day)	0~65535 days	Read only
	06-66	Fault Record 2 (Min)	0~1439 min	Read only
	06-67	Fault Record 3 (Day)	0~65535 days	Read only
	06-68	Fault Record 3 (Min)	0~1439 min	Read only
	06-69	Fault Record 4 (Day)	0~65535 days	Read only
	06-70	Fault Record 4 (Min)	0~1439 min	Read only
✓	06-71	Low Current Setting Level	0.0 ~ 100.0 %	0.0
✓	06-72	Low Current Detection Time	0.00 ~ 360.00 sec.	0.00
✓	06-73	Treatment for low current	0 : No function 1 : Warn and coast to stop 2 : Warn and ramp to stop by 2nd deceleration time 3 : Warn and operation continue	0

07 Special Parameters

	Pr.	Explanation	Settings	Factory Setting
✓	07-00	Software Brake Level	575V：850.0~1116.0Vdc 690V：939.0~1318.0Vdc	895.0 1057.0
✓	07-01	DC Brake Current Level	0~100%	0
✓	07-02	DC Brake Time at RUN	0.0~60.0 sec.	0.0
✓	07-03	DC Brake Time at Stop	0.0~60.0 sec.	0.0
✓	07-04	DC Brake frequency at Stop	0.00~599.00Hz	0.00
✓	07-05	Voltage Incrasing Gain	1~200%	100
✓	07-06	Restart after Momentary Power Loss	0: Stop operation 1: Speed search for last frequency command 2: Speed search for minimum output frequency	0
✓	07-07	Maximum Power Loss Duration	0.0~20.0 sec.	2.0
✓	07-08	Base Block Time	0.1~5.0 sec.	0.5
✓	07-09	Current Limit for Speed Search	20~200%	100
✓	07-10	Treatment to Restart After Fault	0: Stop operation 1: Speed search starts with current speed 2: Speed search starts with minimum output frequency	0
✓	07-11	Number of Times of Auto Restart After Fault	0~10	0
✓	07-12	Speed Search during Start-up	0: Disable 1: Speed search for maximum output frequency 2: Speed search for start-up motor frequency 3: Speed search for minimum output frequency	0
✓	07-13	dEb Function Selection	0: Disable 1: dEb with auto accel./decal., the output frequency will not return after power reply. 2: dEb with auto accel./decal., the output frequency will return after power reply.	0
✓	07-14	Reserved		
✓	07-15	Dwell Time at Accel.	0.00 ~ 600.00sec	0.00
✓	07-16	Dwell Frequency at Accel.	0.00 ~ 599.00Hz	0.00
✓	07-17	Dwell Time at Decel.	0.00 ~ 600.00sec	0.00
✓	07-18	Dwell Frequency at Decel.	0.00 ~ 599.00Hz	0.00
✓	07-19	Fan Cooling Control	0: Fan always ON 1: 1 minute after the AC motor drive stops, fan will be OFF 2: When the AC motor drive runs, the fan is ON. When the AC motor drive stops, the fan is OFF 3: Fan turns ON when preliminary IGBT temperature (around 60°C) is attained. 4: Fan always OFF	0
✓	07-20	Emergency Stop (EF) & Force to Stop Selection	0: Coast stop 1: By deceleration Time 1 2: By deceleration Time 2 3: By deceleration Time 3 4: By deceleration Time 4 5: System Deceleration 6: Automatic Deceleration	0

	Pr.	Explanation	Settings	Factory Setting
✓	07-21	Auto Energy-saving Operation	0: Disable 1: Enable	0
✓	07-22	Energy-saving Gain	10~1000%	100
✓	07-23	Auto Voltage Regulation(AVR) Function	0: Enable AVR 1: Disable AVR 2: Disable AVR during deceleration	0
✓	07-24	Filter Time of Torque Compensation (V/F and SVC control mode)	0.001~10.000 sec	0.500
✓	07-25	Filter Time of Slip Compensation (V/F and SVC control mode)	0.001~10.000 sec	0.100
✓	07-26	Torque Compensation Gain (V/F and SVC control mode)	0~10 (Default: 1 in SVC mode)	0
✓	07-27	Slip Compensation Gain (V/F and SVC control mode)	0.00~10.00	0.00
✓	07-28	Reserved		
✓	07-29	Slip Deviation Level	0.0~100.0%	0
✓	07-30	Detection Time of Slip Deviation	0.0~10.0 sec	1.0
✓	07-31	Over Slip Treatment	0: Warn and keep operation 1: Warn and ramp to stop 2: Warn and coast to stop 3: No warning	0
✓	07-32	Motor Hunting Gain	0~10000	1000
✓	07-33	Autorestart internal of Fault	0.0~6000.0 sec	60.0

08 High-function PID Parameters

	Pr.	Explanation	Settings	Factory Setting
✓	08-00	Input Terminal for PID Feedback	0: No function 1: Negative PID feedback: on analogue input acc. To setting 5 of Pr. 03-00 to Pr.03-02. 2: Negative PID feedback from PG card (Pr.10-02, skip direction) 3: Negative PID feedback from PG card (Pr.10-02) 4: Positive PID feedback from external terminal AVI (Pr.03-00) 5: Positive PID feedback from PG card (Pr.10-02, skip direction) 6: Positive PID feedback from PG card (Pr.10-02) 7: Negative PID feeback from communication protocol 8: Positive PID feedback from communication protocol	0
✓	08-01	Proportional Gain (P)	0.0~500.0	1.0
✓	08-02	Integral Time (I)	0.00~100.00sec	1.00
✓	08-03	Derivative Control (D)	0.00~1.00sec	0.00
✓	08-04	Upper Limit of Integral Control	0.0~100.0%	100.0
✓	08-05	PID Output Frequency Limit	0.0~110.0%	100.0
✓	08-06	PID feedback value by communication protocol	-200.00~200.00%	Read only
✓	08-07	PID Delay Time	0.0~35.0 sec	0.0
✓	08-08	Feedback Signal Detection Time	0.0~3600.0 sec	0.0
✓	08-09	Feedback Signal Fault Treatment	0: Warn and keep operation 1: Warn and ramp to stop 2: Warn and coast to stop 3: Warn and operate at last frequency	0
✓	08-10	Sleep Frequency	0.00 ~ 599.00Hz	0.00
✓	08-11	Wake-up Frequency	0.00 ~ 599.00Hz	0.00
✓	08-12	Sleep Time	0.0 ~ 6000.0sec	0.0
✓	08-13	PID Deviation Level	1.0 ~ 50.0%	10.0
✓	08-14	PID Deviation Time	0.1~300.0sec	5.0
✓	08-15	Filter Time for PID Feedback	0.1~300.0sec	5.0
✓	08-16	PID Compensation Selection	0: Parameter setting 1: Analog input	0
✓	08-17	PID Compensation	-100.0~+100.0%	0
	08-18	Setting of Sleep Mode Function	0: Follow PID output command 1: Follow PID feedback signal	0
✓	08-19	Wakeup Integral Limit	0.0~200.0%	50.0
	08-20	PID Mode Selection	0: Serial connection 1: Parallel connection	0
	08-21	Enable PID to Change Operation Direction	0: Operation direction can be changed 1: Operation direction can not be changed	0
✓	08-22	Wakeup Delay Time	0.00~600.00 Seconds	0.00
✓	08-23	PID Control Flag	Bit 0 = 1, PID reverse running must follow the setting of Pr00-23. Bit 0 = 0, PID reverse running follow PID's calculated value.	0

09 Communication Parameters

	Pr.	Explanation	Settings	Factory Setting
✓	09-00	COM1 Communication Address	1~254	1
✓	09-01	COM1 Transmission Speed	4.8~115.2Kbps	9.6
✓	09-02	COM1 Transmission Fault Treatment	0: Warn and continue operation 1: Warn and ramp to stop 2: Warn and coast to stop 3: No warning and continue operation	3
✓	09-03	COM1 Time-out Detection	0.0~100.0 sec.	0.0
✓	09-04	COM1 Communication Protocol	1: 7N2 (ASCII) 2: 7E1 (ASCII) 3: 7O1 (ASCII) 4: 7E2 (ASCII) 5: 7O2 (ASCII) 6: 8N1 (ASCII) 7: 8N2 (ASCII) 8: 8E1 (ASCII) 9: 8O1 (ASCII) 10: 8E2 (ASCII) 11: 8O2 (ASCII) 12: 8N1 (RTU) 13: 8N2 (RTU) 14: 8E1 (RTU) 15: 8O1 (RTU) 16: 8E2 (RTU) 17: 8O2 (RTU)	1
	09-05 ~ 09-08	Reserved		
✓	09-09	Response Delay Time	0.0~200.0ms	2.0
	09-10	Main Frequency of the Communication	0.00~599.00Hz	60.00
✓	09-11	Block Transfer 1	0~65535	0
✓	09-12	Block Transfer 2	0~65535	0
✓	09-13	Block Transfer 3	0~65535	0
✓	09-14	Block Transfer 4	0~65535	0
✓	09-15	Block Transfer 5	0~65535	0
✓	09-16	Block Transfer 6	0~65535	0
✓	09-17	Block Transfer 7	0~65535	0
✓	09-18	Block Transfer 8	0~65535	0
✓	09-19	Block Transfer 9	0~65535	0
✓	09-20	Block Transfer 10	0~65535	0
✓	09-21	Block Transfer 11	0~65535	0
✓	09-22	Block Transfer 12	0~65535	0
✓	09-23	Block Transfer 13	0~65535	0
✓	09-24	Block Transfer 14	0~65535	0
✓	09-25	Block Transfer 15	0~65535	0
✓	09-26	Block Transfer 16	0~65535	0

Pr.	Explanation	Settings	Factory Setting
09-27 ~ 09-29	Reserved		
09-30	Communication Decoding Method	0: Decoding Method 1 (20xx) 1: Decoding Method 2 (60xx)	1
09-31	Internal Communication Protocol	0: Modbus 485 -1: Internal Communication Slave 1 -2: Internal Communication Slave 2 -3: Internal Communication Slave 3 -4: Internal Communication Slave 4 -5: Internal Communication Slave 5 -6: Internal Communication Slave 6 -7: Internal Communication Slave 7 -8: Internal Communication Slave 8 -9: Reserved -10: Internal Communication Master -11: Reserve -12: Internal PLC Control	0
09-32	Reserved		
09-33	PLC command force to 0	0~65535	0
09-34	Reserved		
09-35	PLC Address	1~254	2
09-36	CANopen Slave Address	0: Disable 1~127	0
09-37	CANopen Speed	0: 1M bps 1: 500K bps 2: 250K bps 3: 125K bps 4: 100K bps (Delta only) 5: 50K bps	0
09-38	CANopen Frequency Gain	1.00 ~ 2.00	1.00
09-39	CANopen Warning Record	bit 0: CANopen Guarding Time out bit 1: CANopen Heartbeat Time out bit 2: CANopen SYNC Time out bit 3: CANopen SDO Time out bit 4: CANopen SDO buffer overflow bit 5: Can Bus Off bit 6: Error protocol of CANopen bit 7: Reserved bit 8: The setting values of CANopen indexs are fail bit 9: The setting value of CANopen address is fail bit10: The checksum value of CANopen indexs is fail	Read only
09-40	CANopen Decoding Method	0: Delta defined decoding method 1: CANopen DS402 Standard	1
09-41	CANopen Communication Status	0: Node Reset State 1: Com Reset State 2: Boot up State 3: Pre Operation State 4: Operation State 5: Stop State	Read Only
09-42	CANopen Control Status	0: Not ready for use state 1: Inhibit start state 2: Ready to switch on state 3: Switched on state 4: Enable operation state 7: Quick Stop Active state 13: Err Reaction Activation state 14: Error state	Read Only

	Pr.	Explanation	Settings	Factory Setting
	09-43	Reserved		
	09-44	Reserved		
	09-45	CANopen Master Function	0: Disable 1: Enable	0
	09-46	CANopen Master Address	0~127	100
	09-47 ~ 09-59	Reserved		
	09-60	Identifications for Communication Card	0: No communication card 1: DeviceNet Slave 2: Profibus-DP Slave 3: CANopen Slave/Master 4: Modbus-TCP Slave 5: Ethernet/IP Slave 6~8: Reserved	##
	09-61	Firmware Version of Communication Card	Read only	##
	09-62	Product Code	Read only	##
	09-63	Error Code	Read only	##
	09-64 ~ 09-69	Reserved		
✓	09-70	Address of Communication Card (for DeviceNet and PROFIBUS)	DeviceNet: 0-63 Profibus-DP: 1-125	1
✓	09-71	Setting of DeviceNet Speed (for DeviceNet and PROFIBUS)	Standard DeviceNet: 0: 125Kbps 1: 250Kbps 2: 500Kbps Non standard DeviceNet: (Delta Only) 0: 10Kbps 1: 20Kbps 2: 50Kbps 3: 100Kbps 4: 125Kbps 5: 250Kbps 6: 500Kbps 7: 800Kbps 8: 1Mbps	2
✓	09-72	Other Setting of DeviceNet Speed (for DeviceNet and PROFIBUS)	0: Disable In this mode, baud rate can only be 123K bps, 250K bps, 500K bps in standard DeviceNet speed 1: Enable In this mode, the baud rate of DeviceNet can be same as CANopen (0-8).	0
	09-73	Reserved		
	09-74	Reserved		
✓	09-75	IP Configuration of the Communication Card (for MODBUS TCP)	0: Static IP 1: Dynamic IP (DHCP)	0
✓	09-76	IP Address 1 of the Communication Card (for MODBUS TCP)	0~65535	0
✓	09-77	IP Address 2 of the Communication Card (for MODBUS TCP)	0~65535	0

	Pr.	Explanation	Settings	Factory Setting
✓	09-78	IP Address 3 of the Communication Card (for MODBUS TCP)	0~65535	0
✓	09-79	IP Address 4 of the Communication Card (for MODBUS TCP)	0~65535	0
✓	09-80	Address Mask 1 of the Communication Card (for MODBUS TCP)	0~65535	0
✓	09-81	Address Mask 2 of the Communication Card (for MODBUS TCP)	0~65535	0
✓	09-82	Address Mask 3 of the Communication Card (for MODBUS TCP)	0~65535	0
✓	09-83	Address Mask 4 of the Communication Card (for MODBUS TCP)	0~65535	0
✓	09-84	Getway Address 1 of the Communication Card (for MODBUS TCP)	0~65535	0
✓	09-85	Getway Address 2 of the Communication Card (for MODBUS TCP)	0~65535	0
✓	09-86	Getway Address 3 of the Communication Card (for MODBUS TCP)	0~65535	0
✓	09-87	Getway Address 4 of the Communication Card (for MODBUS TCP)	0~65535	0
✓	09-88	Password for Communication Card (Low word) (for MODBUS TCP)	0~99	0
✓	09-89	Password for Communication Card (High word) (for MODBUS TCP)	0~99	0
✓	09-90	Reset Communication Card (for MODBUS TCP)	0: No function 1: Reset, return to factory setting	0
✓	09-91	Additional Setting for Communication Card (for MODBUS TCP)	Bit 0: Enable IP filter Bit 1: Enable to write internet parameters (1bit). This bit will change to disable when it finishes saving the internet parameter updates. Bit 2: Enable login password (1bit). When enter login password, this bit will be enabled. After updating the parameters of communication card, this bit will change to disable.	0
	09-92	Status of Communication Card (for MODBUS TCP)	Bit 0: password enable When the communication card is set with password, this bit is enabled. When the password is clear, this bit is disabled.	0

10 Speed Feedback Control Parameters

NOTE IM: Induction Motor; PM: Permanent Magnet Motor

	Pr.	Explanation	Settings	Factory Setting
	10-00	Encoder Type Selection	0: Disable 1: ABZ 2: ABZ (Delta Encoder for Delta servo motor) 3: Resolver 4: ABZ/UVW 5: MI8 single phase pulse input	0
	10-01	Encoder Pulse	1~20000	600
	10-02	Encoder Input Type Setting	0: Disable 1: Phase A leads in a forward run command and phase B leads in a reverse run command 2: Phase B leads in a forward run command and phase A leads in a reverse run command 3: Phase A is a pulse input and phase B is a direction input. (low input=reverse direction, high input=forward direction) 4: Phase A is a pulse input and phase B is a direction input. (low input=forward direction, high input=reverse direction) 5: Single-phase input	0
✓	10-03	Output Setting for Frequency Division (denominator)	1~255	1
✓	10-04	Electrical Gear at Load Side A1	1~65535	100
✓	10-05	Electrical Gear at Motor Side B1	1~65535	100
✓	10-06	Electrical Gear at Load Side A2	1~65535	100
✓	10-07	Electrical Gear at Motor Side B2	1~65535	100
✓	10-08	Treatment for Encoder/ Speed Observer Feedback Fault	0: Warn and keep operation 1: Warn and ramp to stop 2: Warn and coast to stop	2
✓	10-09	Detection Time of Encoder / Speed Observer Feedback Fault	0.0~10.0sec 0: No function	1.0
✓	10-10	Encoder/ Speed Observer Stall Level	0~120% 0: No function	115
✓	10-11	Detection Time of Encoder/ Speed Observer Stall	0.0 ~ 2.0sec	0.1
✓	10-12	Treatment for Encoder/ Speed Observer Stall	0: Warn and keep operation 1: Warn and ramp to stop 2: Warn and coast to stop	2
✓	10-13	Encoder/ Speed Observer Slip Range	0~50% (0: disable)	50
✓	10-14	Detection Time of Encoder/ Speed Observer Slip	0.0~10.0sec	0.5
✓	10-15	Treatment for Encoder/ Speed Observer Stall and Slip Error	0: Warn and keep operation 1: Warn and ramp to stop 2: Warn and coast to stop	2
✓	10-16	Pulse Input Type Setting	0: Disable 1: Phase A leads in a forward run command and phase B leads in a reverse run command 2: Phase B leads in a forward run command and phase A leads in a reverse run command 3: Phase A is a pulse input and phase B is a direction input. (L=reverse direction, H=forward direction). 4: Phase A is a pulse input and phase B is a direction input. (L=forward direction, H=reverse direction).	0
✓	10-17	Electrical Gear A	1~65535	100

	Pr.	Explanation	Settings	Factory Setting
✓	10-18	Electrical Gear B	1~65535	100
✓	10-19	Positioning for Encoder Position	-32767~2400	0
✓	10-20	Range for Encoder Position Attained	0~65535pulse	10
✓	10-21	Filter Time (PG2)	0~65.535 sec	0.100
	10-22	Speed Mode (PG2)	0: Electronic Frequency 1: Mechanical Frequency (base on pole pair)	0
	10-23	Reserved		
✓	10-24	FOC&TQC Function Control	0~65535	0
✓	10-25	FOC Bandwidth of Speed Observer	1.0~100.0Hz	40.0
✓	10-26	FOC Minimum Stator Frequency	0.0~10.0%fN	2.0
✓	10-27	FOC Low-pass Filter Time Constant	1~1000ms	50
✓	10-28	FOC Excitation Current Rise Time	33~100%Tr	100
✓	10-29	Top Limit of Frequency Deviation	0.00~100.00Hz	20.00
	10-30	Resolver Pole Pair	1~50	1
✓	10-31	I/F Mode, current command	0~150%Irated (Rated current % of motor)	40
✓	10-32	PM Sensorless Obeserver Bandwith for High Speed Zone	0.00~600.00Hz	5.00
	10-33	Reserved		
✓	10-34	PM Sensorless Observer Low-pass Filter Gain	0.00~655.35	1.00
✓	10-35	AMR (Kp)	0.00~3.00	2.00
✓	10-36	AMR (Ki)	0.00~3.00	0.20
✓	10-37	PM Sensorless Control Word	0000~FFFFh	0000
	10-38	Reserved		
✓	10-39	Frequency when switch from I/F Mode to PM sensorless mode.	0.00~599.00Hz	20.00
✓	10-40	Frequency when switch from I/F sensorless observer mode to V/F mode.	0.00~599.00Hz	20.00
✓	10-41	I/F mode, low pass-filter time	0.0~6.0sec	0.2
✓	10-42	Initial Angle Detection Time	0.0~3.0	1.0
	10-43	PG card version	0~655.35	Read only
	10-44 ~ 10-48	Reserved		
	10-49	Zero voltage time while start up	00.000~60.000 sec	00.000
	10-50	Reverse angle limit (Electrical angle)	0.00~30.00 degree	10.00
	10-51	Injection Frequency	0~1200Hz	500
	10-52	Injection Magnitude	0.0~200.0V	15/30
	10-53	PM Motor Initial Rotor Position Detection Method	0: No function 1: DC injection 2: High frequency injection 3: Pulse injection 4~5: Reserved	0

11 Advanced Parameters

NOTE IM: Induction Motor; PM: Permanent Magnet Motor

	Pr.	Explanation	Settings	Factory Setting
	11-00	System Control	bit 0: Auto tuning for ASR and APR bit 1: Inertia estimate (only for FOCPG mode) bit 2: Zero servo bit 3: Dead Time compensation closed Bit 7: Selection to save or not save the frequency Bit 8: Maximum speed of point to point position control	0
	11-01	Per Unit of System Inertia	1~65535（256=1PU）	256
✓	11-02	ASR1/ASR2 Switch Frequency	5.00~599.00Hz	7.00
✓	11-03	ASR1 Low-speed Bandwidth	1~40Hz (IM)/ 1~100Hz (PM)	10
✓	11-04	ASR2 High-speed Bandwidth	1~40Hz (IM)/ 1~100Hz (PM)	10
✓	11-05	Zero-speed Bandwidth	1~40Hz (IM)/ 1~100Hz (PM)	10
✓	11-06	ASR Control (P) 1	0~40Hz (IM)/ 1~100Hz (PM)	10
✓	11-07	ASR Control (I) 1	0.000~10.000 sec	0.100
✓	11-08	ASR Control (P) 2	0~40Hz (IM)/ 0~100Hz (PM)	10
✓	11-09	ASR Control (I) 2	0.000~10.000 sec	0.100
✓	11-10	P Gain of Zero Speed	0~40Hz (IM)/ 0~100Hz (PM)	10
✓	11-11	I Gain of Zero Speed	0.000~10.000 sec	0.100
✓	11-12	Gain for ASR Speed Feed Forward	0~150%	0
✓	11-13	PDFF Gain	0~200%	30
✓	11-14	Low-pass Filter Time of ASR Output	0.000~0.350 sec	0.008
✓	11-15	Notch Filter Depth	0~20db	0
✓	11-16	Notch Filter Frequency	0.00~200.00Hz	0.0
✓	11-17	Forward Motor Torque Limit	0~500%	500
✓	11-18	Forward Regenerative Torque Limit	0~500%	500
✓	11-19	Reverse Motor Torque Limit	0~500%	500
✓	11-20	Reverse Regenerative Torque Limit	0~500%	500
✓	11-21	Gain Value of Flux Weakening Curve for Motor 1	0~200%	90
✓	11-22	Gain Value of Flux Weakening Curve for Motor 2	0~200%	90
✓	11-23	Speed Response of Flux Weakening Area	0~150%	65
✓	11-24	APR Gain	0.00~40.00Hz (IM)/ 0~100.00Hz (PM)	10.00
✓	11-25	Gain Value of APR Feed Forward	0~100	30
✓	11-26	APR Curve Time	0.00~655.35 sec	3.00
✓	11-27	Max. Torque Command	0~500%	100
✓	11-28	Source of Torque Offset	0: No function 1: Analog signal input (Pr.03-00~03-02) 2: Pr.11-29 3: Control by external terminal (Pr.11-30~11-32)	0

	Pr.	Explanation	Settings	Factory Setting
✓	11-29	Torque Offset Setting	-100%~100%	0.0
✓	11-30	High Torque Offset	-100%~100%	30.0
✓	11-31	Middle Torque Offset	-100%~100%	20.0
✓	11-32	Low Torque Offset	-100%~100%	10.0
✓	11-33	Source of Torque Command	0: Digital keypad 1: RS-485 communication (Pr.11-34) 2: Analog input (Pr.03-00) 3: CANopen 4: Reserved 5: Communication extension card	0
✓	11-34	Torque Command	-100.0~+100.0% (Pr.11-27*11-34)	0
✓	11-35	Filter Time of Torque Command	0.000~1.000sec	0.000
	11-36	Speed Limit Selection	0: Set by Pr.11-37 (Forward speed limit) and Pr.11-38 (Reverse speed limit) 1: Set by Pr.11-37,11-38 and Pr.00-20 (Source of Master Frequency Command) 2: Set by Pr.00-20 (Source of Master Frequency Command).	0
✓	11-37	Forward Speed Limit (torque mode)	0~120%	10
✓	11-38	Reverse Speed Limit (torque mode)	0~120%	10
	11-39	Zero Torque Command Mode	0: Torque mode 1: Speed mode	0
✓	11-40	Command Source of Point-to-Point Position Control	0: External terminal 1: Reserved 2: RS485 3: CAN 4: Reserved 5: Communication card	0
	11-41	Reserved		
✓	11-42	System Control Flags	0000~FFFFh	0000
✓	11-43	Max. Frequency of Point-to-Point Position Control	0.00~599.00Hz	10.00
✓	11-44	Accel. Time of Point-to Point Position Control	0.00~655.35 sec	1.00
✓	11-45	Decel. Time of Point-to Point Position Control	0.00~655.35 sec	3.00

Chapter 12 Description of Parameter Settings

12-1 Description of parameter settings

00 Drive Parameters

This parameter can be set during operation.

00-00 Identity Code of the AC Motor Drive

Factory Setting: #.#

Settings Read Only

00-01 Display AC Motor Drive Rated Current

Factory Setting: #.#

Settings Read Only

Pr. 00-00 displays the identity code of the AC motor drive. Using the following table to check if Pr.00-01 setting is the rated current of the AC motor drive. Pr.00-01 corresponds to the identity code Pr.00-00.

The factory setting is the rated current for light duty. Please set Pr.00-16 to display the rated current for normal duty or heavy duty.

Frame		C				D		E				F	
VFD-_ _ _ C63B-00/21;		185	220	300	370	450	550	750	900	1100	1320	1600	2000
ID code		612	613	614	615	616	617	618	619	620	621	622	686
Rated Current	LD	24	30	36	45	54	67	86	104	125	150	180	220
	ND	20	24	30	36	45	54	67	86	104	125	150	180
	HD	14	20	24	30	36	45	54	67	86	104	125	150

Frame		G		H			
VFD-_ _ _ C63B-00/21;		2500	3150	4000	4500	5600	6300
ID code		687	626	628	629	631	632
Rated Current	LD	290	350	430	465	590	675
	ND	220	290	350	385	465	675
	HD	180	220	290	310	420	675

00-02 Parameter Reset

Factory Setting: 0

Settings
0: No Function
1: Parameter write protect
5: Reset KWH display to 0
6: Reset PLC (including CANopen Master Index)
7: Reset CANopen Index (Slave)
8: Reserve
9: All parameters are reset to factory settings(base frequency is 50Hz)
10: All parameters are reset to factory settings (base frequency is 60Hz)

When it is set to 1, all parameters are read only except Pr.00-02~00-08 and it can be used with password setting for password protection. It needs to set Pr.00-02 to 0 before changing other parameter settings.

When it is set to 9 or 10: all parameters are reset to factory settings. If password is set in Pr.00-08, input the password set in Pr.00-07 to reset to factory settings.

- When it is set to 5, KWH display value can be reset to 0 even when the drive is operating. Pr. 05-26, 05-27, 05-28, 05-29, 05-30 reset to 0.
- When it is set to 6: clear internal PLC program (includes the related settings of PLC internal CANopen master)
- When it is set to 7: reset the related settings of CANopen slave.
- When it is set to 6、7、9、10, please re-power the motor drive after setting.

00-03 Start-up Display Selection

Factory setting: 0

Settings
0: Display the frequency command (F)
1: Display the actual output frequency (H)
2: Display User define (U)
3: Output current (A)

- This parameter determines the start-up display page after power is applied to the drive. User defined choice display according to the setting in Pr.00-04.

00-04 Content of Multi-function Display

Factory setting: 3

Settings
0: Display output current (A) (Unit: Amps)
1: Display counter value (c) (Unit: CNT)
2: Display actual output frequency (H.) (Unit: Hz)
3: Display DC-BUS voltage (v) (Unit: Vdc)
4: Display output voltage (E) (Unit: Vac)
5: Display output power angle (n) (Unit: deg)
6: Display output power in kW (P) (Unit: Kw)
7: Display actual motor speed rpm (r = 00: positive speed; -00 negative speed) (Unit: rpm)
8: Display estimate output torque % (t = 00: positive torque; -00 negative torque) (t) (Unit: %)
9: Display PG feedback (G) (refer to Note 1) (Unit: PLS)
10: Display PID feedback (b) (Unit: %)
11: Display AVI in % (1.), 0~10V/4-20mA/0-20mA corresponds to 0~100% (Refer to Note 2) (Unit: %)
12: Display ACI in % (2.), 4~20mA/0~10V/0-20mA corresponds to 0~100%（Refer to Note 2）(Unit: %)
13: Display AUI in % (3.), -10V~10V corresponds to -100~100%(Refer to Note 2) (Unit: %)
14: Display the temperature of IGBT (i.) (Unit: ℃)
15: Display the temperature of capacitance (c.) (Unit: ℃)
16: The status of digital input (ON/OFF) refer to Pr.02-12 (i) (Refer to Note3)
17: Display digital output status ON/OFF (Pr.02-18) (o) (refer to NOTE 4)
18: Display the multi-step speed that is executing (S)

19: The corresponding CPU pin status of digital input (d) (refer to NOTE 3)
20: The corresponding CPU pin status of digital output (0.) (refer to NOTE 4)
21: Actual motor position (PG1 of PG card). When the motor direction changes or the drive stops, the counter will start from 0 (display value restarts counting from 0) (Max. 65535) (P.)
22: Pulse input frequency (PG2 of PG card) (S.)
23: Pulse input position (PG2 of PG card) (max. 65535) (q.)
24: Position command tracing error (E.)
25: Overload counting (0.00~100.00%) (o.) (Refer to Note 6) (Unit: %)
26: GFF Ground Fault (G.) (Unit: %)
27: DC Bus voltage ripple (r.) (Unit: %)
28: Display PLC register D1043 data (C) display in hexadecimal
29: Display PM motor pole section (EMC-PG01U application) (4.)
30 : Display output of user defined (U)
31 : H page x 00-05 Display user Gain(K)
32: Number of actual motor revolution during operation (PG card plug in and Z phase signal input) (Z.)
33: Motor actual position during operation (when PG card is connected)(q)
34: Operation speed of fan (F.) (Unit: %)
35: Control Mode display: 0= Speed control mode (SPD), 1= torque control mode (TQR) (t.)
36: Present operating carrier frequency of drive (Hz) (J.)
37: Reserved
38: Display drive status (6.) (Refer to Note 7)
40: Torque command (L.) (Unit: %)

41: KWH display (J) (Unit: KWH)
42: PID reference (h.) (Unit: %)
43: PID offset (o.) (Unit: %)
44: PID output frequency (b.) (Unit: Hz)
45: Hardware ID

NOTE

1. When Pr.10-01 is set to 1000 and Pr.10-02 is set to 1/2, the display range for PG feedback will be from 0 to 4000.
   When Pr.10-01 is set to 1000 and Pr.10-02 is set to 3/4/5, the display range for PG feedback will be from 0 to 1000.
   Home position: If it has Z phase, Z phase will be regarded as home position. Otherwise, home position will be the encoder start up position.
2. It can display negative values when setting analog input bias (Pr.03-03~03-10).
   Example: assume that AVI input voltage is 0V, Pr.03-03 is 10.0% and Pr.03-07 is 4 (Serve bias as the center).
3. Example: If REV, MI1 and MI6 are ON, the following table shows the status of the terminals.
   0: OFF, 1: ON

Terminal	MI15	MI14	MI13	MI12	MI11	MI10	MI8	MI7	MI6	MI5	MI4	MI3	MI2	MI1	REV	FWD
Status	0	0	0	0	0	0	0	0	1	0	0	0	0	1	1	0

MI10~MI15 are the terminals for extension cards (Pr.02-26~02-31).

If REV, MI1 and MI6 are ON, the value is 0000 0000 1000 0110 in binary and 0086h in HEX. When Pr.00-04 is set to “16” or “19”, it will display “0086h” with LED U is ON on the keypad KPC-CE01. The setting 16 is the status of digital input by Pr.02-12 setting and the setting 19 is the corresponding CPU pin status of digital input, the FWD/REV action and the three-wire MI are not controlled by Pr.02-12. User can set to 16 to monitor digital input status and then set to 19 to check if the wire is normal.

4. Assume that RY1: Pr.02-13 is set to 9 (Drive ready). After applying the power to the AC motor drive, if there is no other abnormal status, the contact will be ON. The display status will be shown as follows.

   N.O. switch status:

Terminal	Reserved				Reserved				Reserved				MO2	MO1	Reserved	RY2	RY1
Status	0	0	0	0	0	0	0	0	0	0	0	0	0	0	0	0	1

   At the meanwhile, if Pr.00-04 is set to 17 or 20, it will display in hexadecimal “0001h” with LED U is ON on the keypad. The setting 17 is the status of digital output by Pr.02-18 setting and the setting 20 is the corresponding CPU pin status of digital output. User can set 17 to monitor the digital output status and then set to 20 to check if the wire is normal.

5. Setting 8: 100% means the motor rated torque. Motor rated torque = (motor rated power x60/2π)/motor rated speed
6. If Pr.00-04 = 25, when display value reaches 100.00%, the drive will show “oL” as an overload warning.
7. If Pr.00-04 = 38,

   Bit 0: The drive is running forward.

   Bit 1: The drive is running backward.

   Bit 2: The drive is ready.

   Bit 3: Errors occurred on the drive.

   Bit 4: The drive is running.

   Bit 5: Warnings on the drive.

00-05 Coefficient Gain in Actual Output Frequency

Factory Setting: 0

Settings 0~160.00

📖 This parameter is to set coefficient gain in actual output frequency. Set Pr.00-04= 31 to display the calculation result on the screen (calculation = output frequency * Pr.00-05).

00-06 Software Version

Factory Setting: #.#

Settings Read only

00-07 Parameter Protection Password Input

Factory Setting: 0

Settings 1~9998, 10000~65535

Display 0~4 (the times of password attempts)

📖 This parameter allows user to enter their password (which is set in Pr.00-08) to unlock the parameter protection and to make changes to the parameter.

- Pr.00-07 and Pr.00-08 are used to prevent the personal mis-operation.
- When the user have forgotten the password, clear the setting by input 9999 and press ENTER key, then input 9999 again and press Enter within 10 seconds. After decoding, all the settings will return to factory setting.

00-08 Parameter Protection Password Setting

Factory Setting: 0

Settings	1~9998, 10000~65535
	0: No password protection / password is entered correctly (Pr00-07)
	1: Password has been set

- To set a password to protect your parameter settings. In the first time, password can be set directly. After setting, the value of 00-08 will become 1, which means password protection is activated. When the password is set, if any parameter setting needs to be changed, be sure to enter correct password in 00-07, and then the password will be inactivated temporarily with 00-08 changing to 0. At this time, parameters setting can be changed. After setting, re-power the motor drive, and password will be activated again.
- To cancel the password protection, after entering correct password in 00-07, 00-08 also needs to be set as 0 again to inactive password protection permanently. If not, password protection will be active after motor drive re-power.
- The keypad copy function will work normally only when the password protection is inactivated temporarily or permanently, and password set in 00-08 will not be copied to keypad. So when copying parameters from keypad to motor drive, the password need to be set manually again in the motor drive to active password protection.

Password Decode Flow Chart

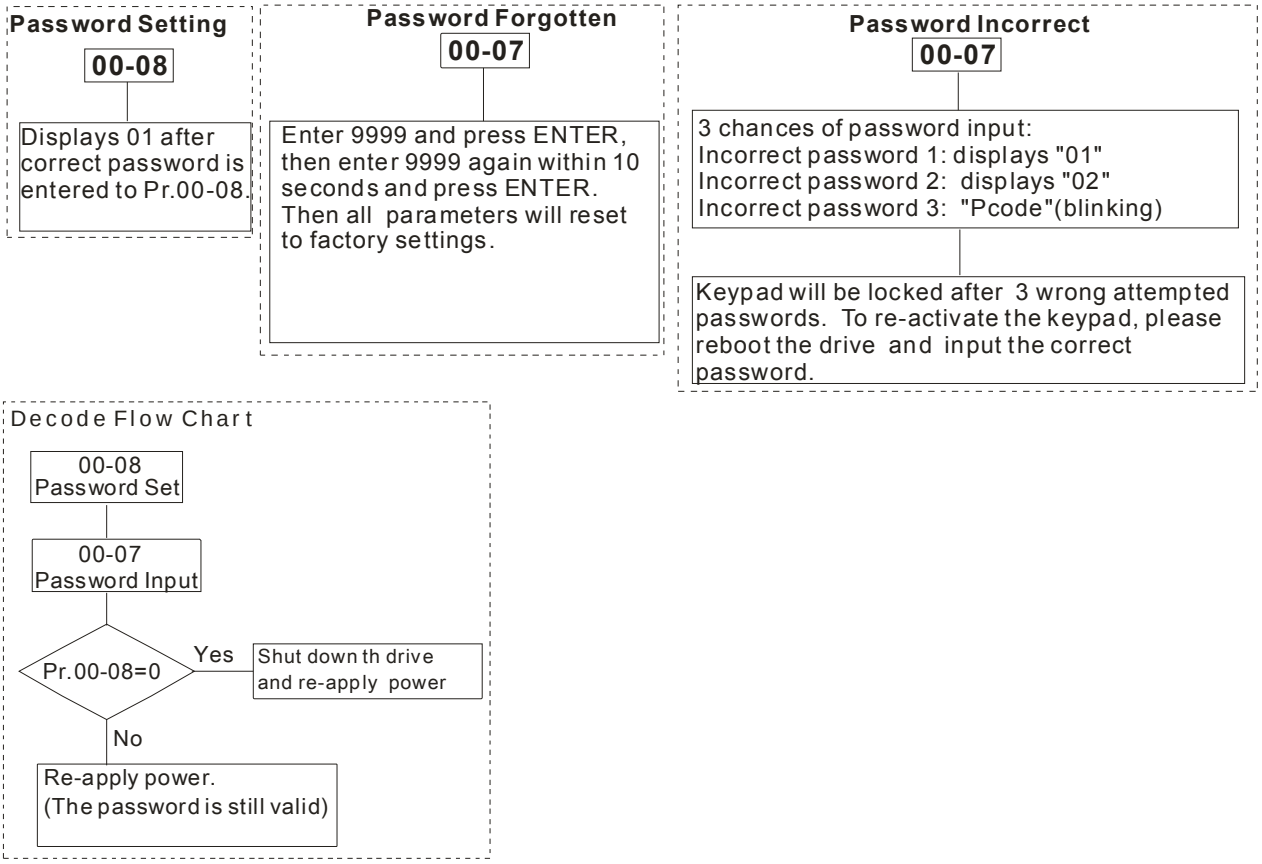

00-09	Reserved
00-10	Control Mode

Factory Setting: 0

Settings 0: Speed mode
1: Point-to-Point position control
2: Torque mode
3: Home mode

This parameter determines the control mode of C2000 series AC motor drive.

00-11	Control of Speed Mode

Factory Setting: 0

Settings 0: VF (IM V/f control)
1: VFPG (IM V/f control+ Encoder)
2: SVC(IM sensorless vector control)

This parameter determines the control method of the AC motor drive:

0: (IM V/f control): user can design proportion of V/f as required and can control multiple motors simultaneously.

1: (IM V/f control + Encoder): user can use optional PG card with encoder for the closed-loop speed control.

2: (IM Sensorless vector control): get the optimal control by the auto-tuning of motor parameters.

When 00-10=0, and set Pr.00-11 to 0, the V/F control diagram is shown as follows.

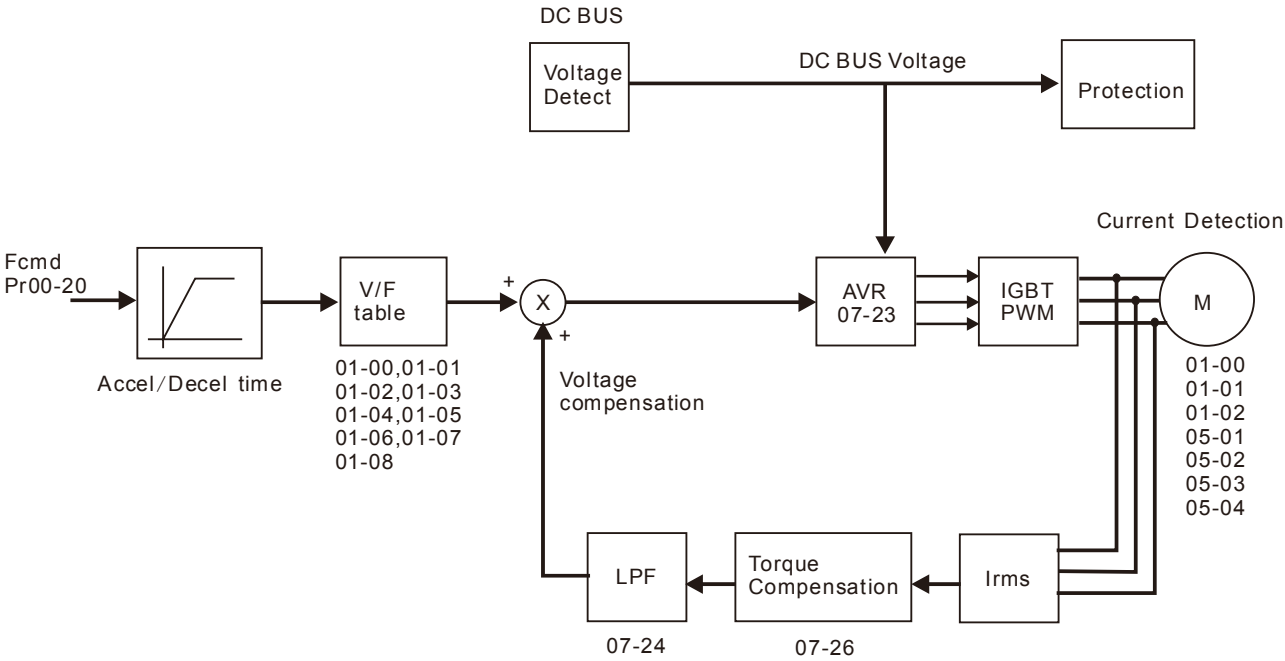

🕮 When 00-10=0, and set Pr.00-11 to 1, the V/F control + encoder diagram is shown as follows.

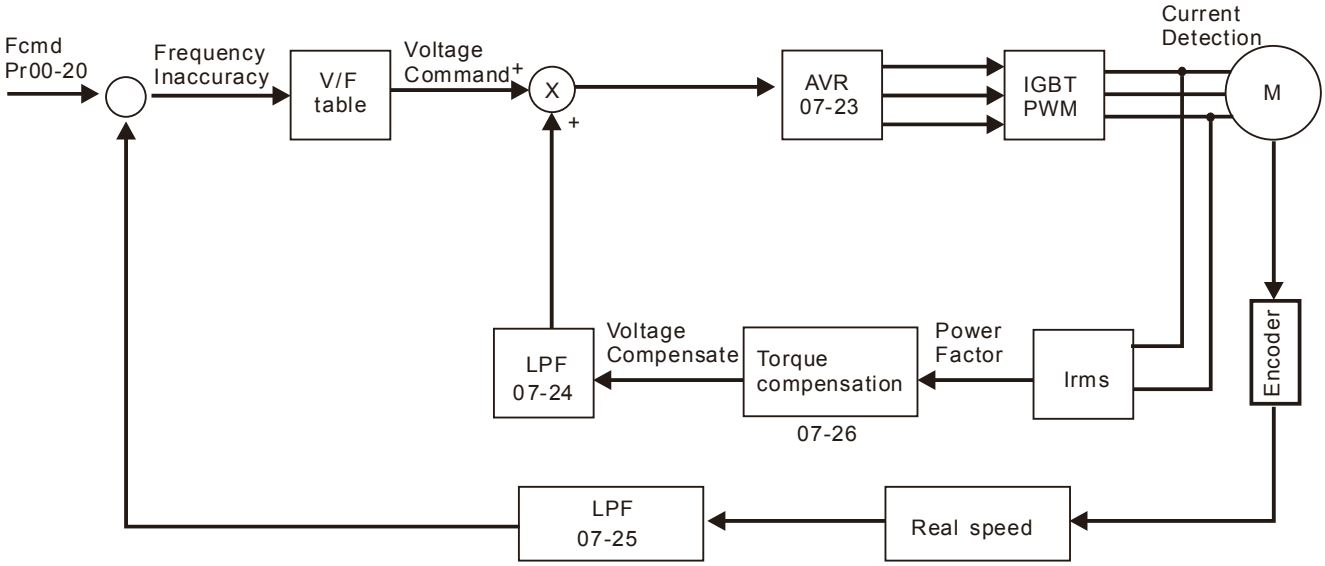

🕮 When 00-10=0, and set Pr.00-11 to 2, the sensorless vector control diagram is shown as follows.

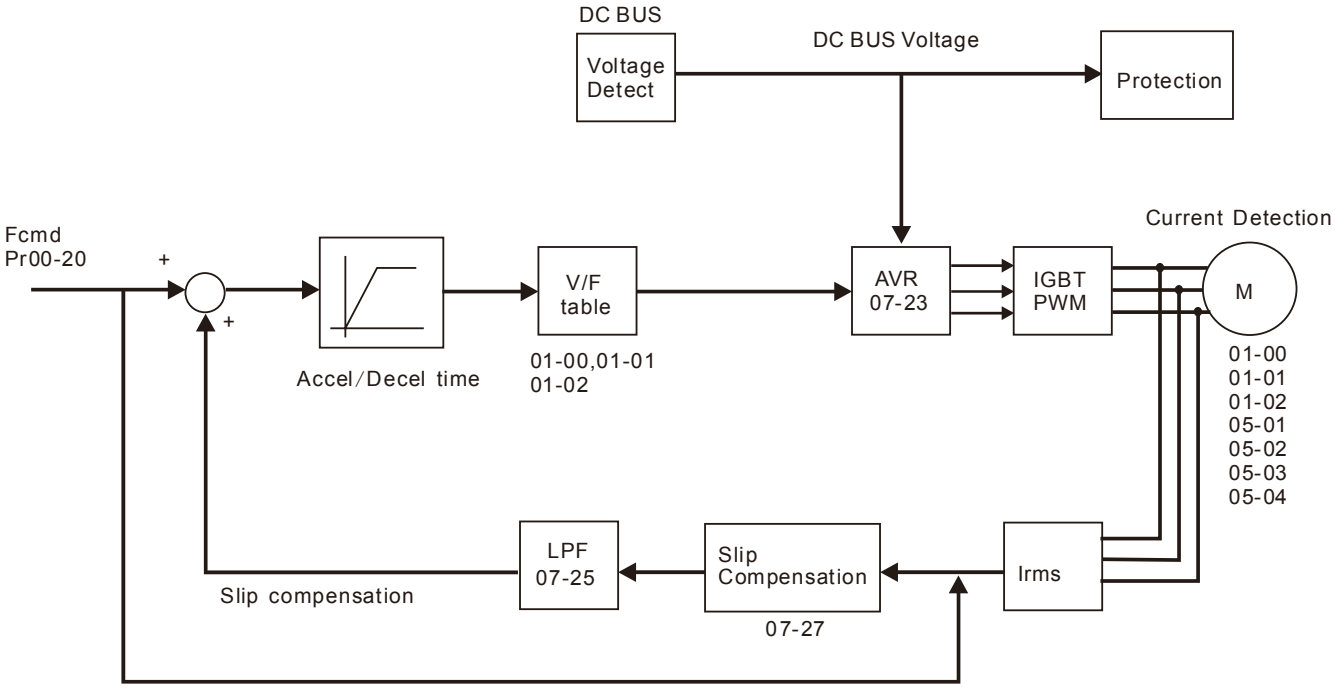

00-12 Point to Point Position control

Factory Settings: 0

Settings: 0: Incremental Type

🕮 Pr. 00-12 = 0 is incremental type P2P;

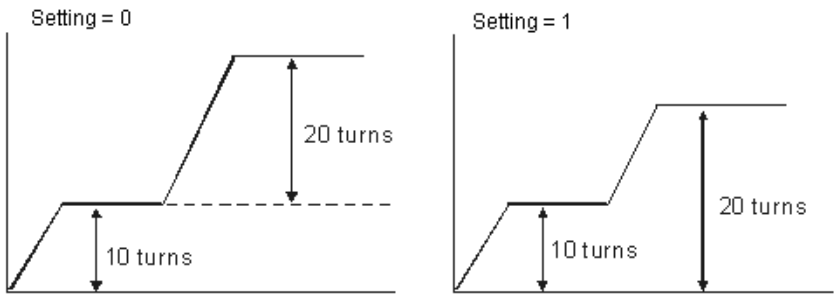

00-13 Control of Torque Mode

Factory Setting: 0

Settings 0: TQCPG（IM Torque control + Encoder）

TQCPG (Pr00-13=0) control diagram is shown in the following:

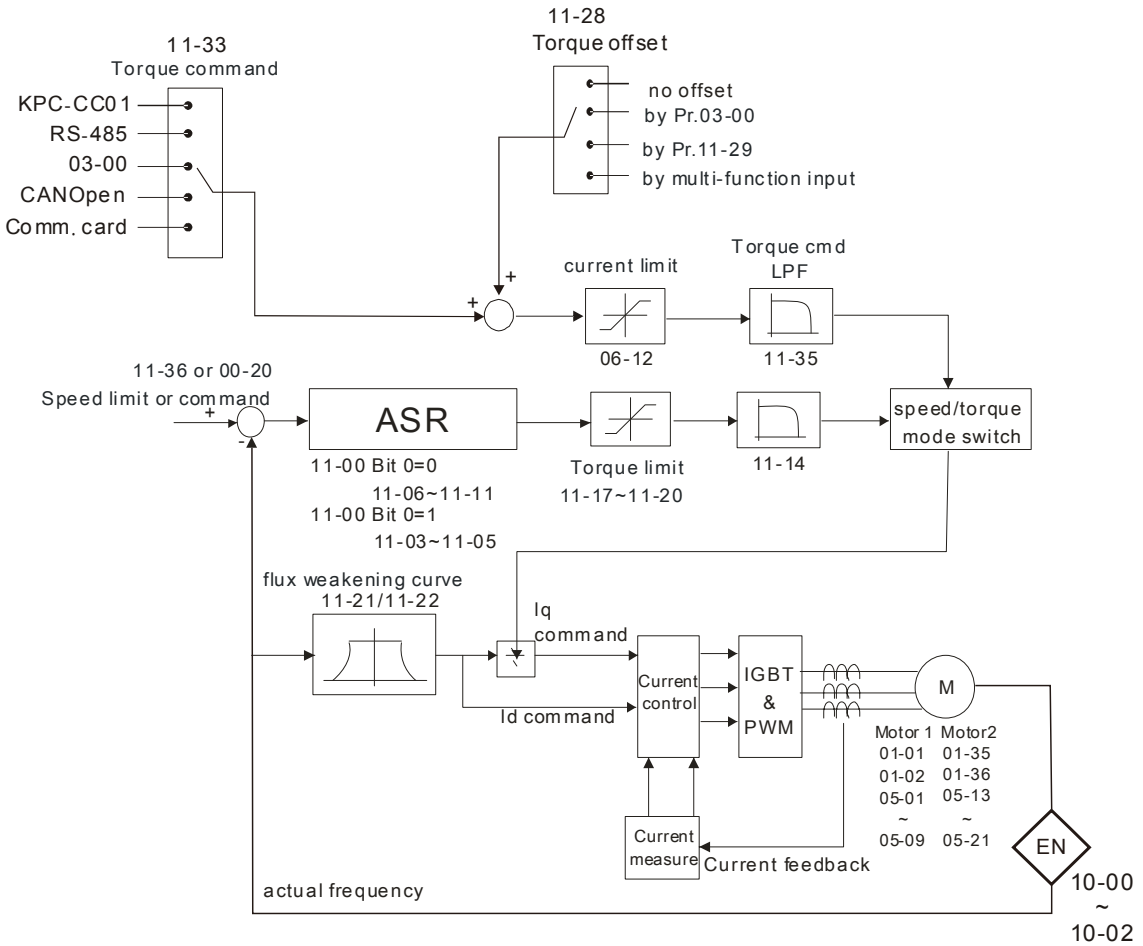

00-14 Reserved

00-15 Reserved

00-16 Duty Selection

Factory Setting: 2

Settings 0: Normal duty
1: Heavy duty
2: Light duty

Normal duty: over load ability is 160% rated output current in 3 second. Please refer to Pr.00-17 for the setting of carrier. Refer to chapter 9 (specifications) or Pr.00-01 for the rated current.

Heavy duty: over load ability is 180% rated output current in 3 second. Please refer to Pr.00-17 for the setting of carrier wave. Refer to chapter 9 (specifications) or Pr.00-01 for the rated current.

Light duty: over load ability is 120% rated output current in 60 second. Please refer to Pr.00-17 for the setting of carrier wave. Refer to chapter 9 (specifications) or Pr.00-01 for the rated current

Pr.00-01 changes as the setting of Pr.00-16 changes. The default setting and maximum setting range of Pr.06-03, 06-04 will change as the setting of Pr.00-16 changes.

00-17 Carrier Frequency

Factory setting: Table below

Settings 2～15kHz

This parameter determinates the PWM carrier frequency of the AC motor drive.

	575V series	690V series	
Models	2-20HP [1.5-15kW]	25-745HP [22-560KW]	830HP [630kW]
Setting Range	02~15kHz	02~9kHz	02~9kHz
Normal Duty Factory Setting	4kHz	4kHz	3kHz
Heavy Duty Factory Setting			
Setting Range			

Carrier Frequency	Acoustic Noise	Electromagnetic Noise or Leakage Current	Heat Dissipation	Current Wave
1kHz	Significant	Minimal	Minimal	
8kHz				
15kHz	Minimal	Significant	Significant	

From the table, we see that the PWM carrier frequency has a significant influence on the electromagnetic noise, AC motor drive heat dissipation, and motor acoustic noise. Therefore, if the surrounding noise is greater than the motor noise, lower the carrier frequency is good to reduce the temperature rise. Although it is quiet operation in the higher carrier frequency, the entire wiring and interference resistance should be considerate.

When the carrier frequency is higher than the factory setting, it needs to protect by decreasing the carrier frequency. See Pr.06-55 for the related setting and details.

00-18 Reserved

00-19 PLC Command Mask

Factory Setting: Read Only

Settings
Bit 0: Control command by PLC force control
Bit 1: Frequency command by PLC force control
Bit 2: Position command by PLC force control
Bit 3: Torque command by PLC force control

This parameter determines if frequency command or control command is occupied by PLC

00-20 Source of the Master Frequency Command（AUTO）

Factory Setting: 0

Settings
0: Digital keypad
1: RS-485 serial communication
2: External analog input (Pr.03-00)
3: External UP/DOWN terminal
4: Pulse input without direction command (Pr.10-16 without direction)
5: Pulse input with direction command (Pr.10-16)
6: CANopen communication card

7: Reserved

8: Communication card (no CANopen card)

- It is used to set the source of the master frequency in AUTO mode.
- Pr.00-20 and 00-21 are for the settings of frequency source and operation source in AUTO mode. Pr.00-30 and 00-31 are for the settings of frequency source and operation source in HAND mode. The AUTO/HAND mode can be switched by the keypad KPC-CC01 or multi-function input terminal (MI).
- The factory setting of frequency source or operation source is for AUTO mode. It will return to AUTO mode whenever power on again after power off. If there is multi-function input terminal used to switch AUTO/HAND mode. The highest priority is the multi-function input terminal. When the external terminal is OFF, the drive won't receive any operation signal and can't execute JOG.

00-21 Source of the Operation Command （AUTO）

Factory Setting: 0

Settings 0: Digital keypad

1: External terminals. Keypad STOP disabled.

2: RS-485 serial communication. Keypad STOP disabled.

3: CANopen card

4: Reserved

5: Communication card (not includes CANopen card)

- It is used to set the source of the operation frequency in AUTO mode.
- When the operation command is controlled by the keypad KPC-CC01, keys RUN, STOP and JOG (F1) are valid.

00-22 Stop Method

Factory Setting: 0

Settings 0: Ramp to stop

1:Coast to stop

- The parameter determines how the motor is stopped when the AC motor drive receives a valid stop command.

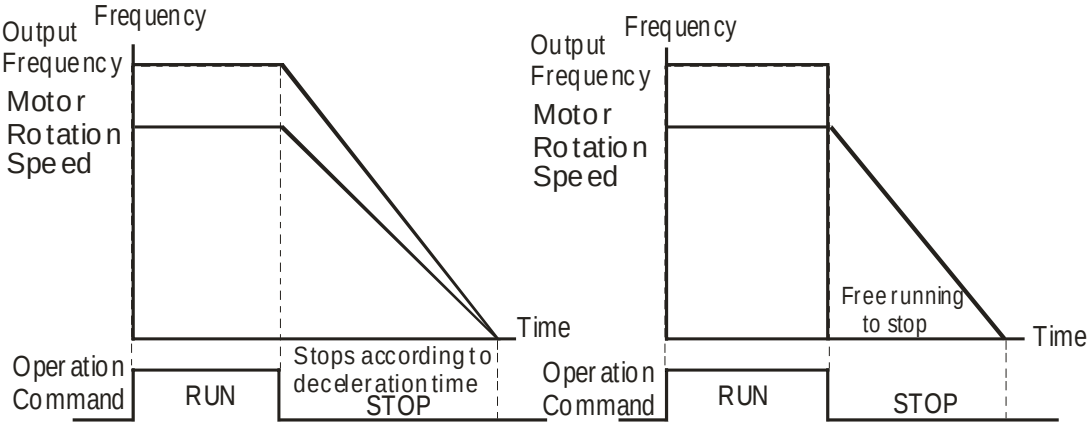

Ramp to Stop and Coast to Stop

- **Ramp to stop:** the AC motor drive decelerates from the setting of deceleration time to 0 or minimum output frequency (Pr. 01-09) and then stop (by Pr.01-07).
- **Coast to stop:** the AC motor drive stops the output instantly upon a STOP command and the motor free runs until it comes to a complete standstill.

  (1) It is recommended to use "ramp to stop" for safety of personnel or to prevent material from being wasted in applications where the motor has to stop after the drive is stopped. The deceleration time has to be set accordingly.

  (2) If the motor free running is allowed or the load inertia is large, it is recommended to select "coast to stop". For example, blowers, punching machines and pumps

00-23 Control of Motor Direction

Factory Setting: 0

Settings 0: Enable forward/ reverse
1: Disable reverse
2: Disable forward

- This parameter enables the AC motor drives to run in the forward/reverse Direction. It may be used to prevent a motor from running in a direction that would consequently injure the user or damage the equipment.

00-24 Memory of Digital Operator (Keypad) Frequency Command

Factory Setting: Read Only

Settings Read only

- If keypad is the source of frequency command, when Lv or Fault occurs the present frequency command will be saved in this parameter.

00-25 User Defined Characteristics

Factory Setting: 0

Settings Bit 0~3: user defined decimal place
0000b: no decimal place
0001b: one decimal place
0010b: two decimal place
0011b: three decimal place

Bit 4~15: user defined unit

000xh: Hz
001xh: rpm
002xh: %
003xh: kg
004xh: m/s
005xh: kW
006xh: HP
007xh: ppm
008xh: 1/m
009xh: kg/s
00Axh: kg/m
00Bxh: kg/h
00Cxh: lb/s
00Dxh: lb/m
00Exh: lb/h
00Fxh: ft/s
010xh: ft/m
011xh: m
012xh: ft
013xh: degC
014xh: degF
015xh: mbar
016xh: bar
017xh: Pa
018xh: kPa
019xh: mWG
01Axh: inWG
01Bxh: ftWG
01Cxh: psi
01Dxh: atm
01Exh: L/s
01Fxh: L/m
020xh: L/h
021xh: m3/s
022xh: m3/h
023xh: GPM
024xh: CFM
xxxxh: Hz

- Bit 0~3: Control F page, unit of user defined value (Pr00-04 =d10, PID feedback) and the decimal point of Pr00-26 which supports up to 3 decimal points.
- Bit 4~15: Control F page, unit of user defined value (Pr00-04=d10, PID feedback) and the display units of Pr00-26.

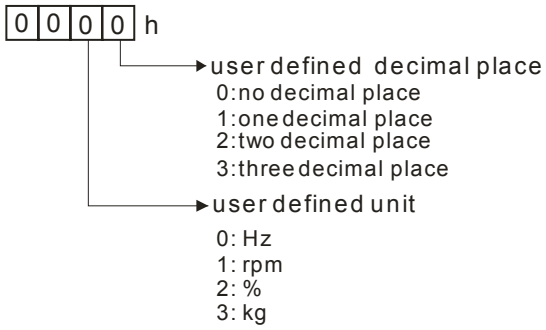

00-26 Max. User Defined Value

Factory Setting: 0

Settings 0: Disable
0~65535 (when Pr.00-25 set to no decimal place)
0.0~6553.5 (when Pr.00-25 set to 1 decimal place)
0.0~655.35 (when Pr.00-25 set to 2 decimal place)
0.0~65.535 (when Pr.00-25 set to 3 decimal place)

When Pr.00-26 is NOT set to 0. The user defined value is enabled. The value of this parameter should correspond to the frequency setting at Pr.01-00.

Example:

When the frequency at Pr. 01-00=60.00Hz, the max. user defined value at Pr. 00-26 is 100.0%. That also means Pr.00-25 is set at 0021h to select % as the unit.

NOTE

The drive will display as Pr.00-25 setting when Pr.00-25 is properly set and Pr.00-26 is not 0.

00-27 User Defined Value

Factory Setting: Read only

Settings Read only

Pr.00-27 will show user defined value when Pr.00-26 is not set to 0.

User defined function is valid when:

1. Pr.00-20 is set to digital keypad control
2. RS-285 communication input control.
3. PID function enable

00-28 Reserved

00-29 LOCAL/REMOTE Selection

Factory Setting: 0

Settings 0: Standard HOA function
1: Switching Local/Remote, the drive stops
2: Switching Local/Remote, the drive runs as the REMOTE setting for frequency and operation status
3: Switching Local/Remote, the drive runs as the LOCAL setting for frequency and operation status
4: Switching Local/Remote, the drive runs as LOCAL setting when switch to Local and runs as REMOTE setting when switch to Remote for frequency and operation status.

The factory setting of Pr.00-29 is 0 (standard Hand-Off-Auto function). The AUTO frequency and source of operation can be set by Pr.00-20 and Pr.00-21, and the HAND frequency and source of operation can be set by Pr.00-30 and Pr.00-31. AUTO/HAND mode can be selected or switched by using digital keypad (KPC-CC01) or setting multi-function input terminal MI= 41, 42.

When external terminal MI is set to 41 and 42 (AUTO/HAND mode), the settings Pr.00-29=1,2,3,4 will be disabled. The external terminal has the highest priority among all command, Pr.00-29 will always function as Pr.00-29=0, standard HOA mode.

- When Pr.00-29 is not set to 0, Local/Remote function is enabled, the top right corner of digital keypad (KPC-CC01) will display “LOC” or “REM” (the display is available when KPC-CC01 is installed with firmware version higher than version 1.021). The LOCAL frequency and source of operation can be set by Pr.00-20 and Pr.00-21, and the REMOTE frequency and source of operation can be set by Pr.00-30 and Pr.00-31. Local/Remote function can be selected or switched by using digital keypad (KPC-CC01) or setting external terminal MI=56. The AUTO key of the digital keypad now controls for the REMOTE function and HAND key now controls for the LOCAL function.
- When MI is set to 56 for LOC/REM selection, if Pr.00-29 is set to 0, then the external terminal is disabled.
- When MI is set to 56 for LOC/REM selection, if Pr.00-29 is not set to 0, the external terminal has the highest priority of command and the ATUO/HAND keys will be disabled.

00-30 Source of the Master Frequency Command（HAND）

Factory Setting: 0

Settings
0: Digital keypad
1: RS-485 serial communication
2: External analog input (Pr.03-00)
3: External UP/DOWN terminal
4: Pulse input without direction command (Pr.10-16 without direction)
5: Pulse input with direction command (Pr.10-16)
6: CANopen communication card
7: Reserved
8: Communication card (no CANopen card)

- It is used to set the source of the master frequency in HAND mode.

00-31 Source of the Operation Command (HAND)

Factory Setting: 0

Settings
0: Digital keypad
1: External terminals. Keypad STOP disabled.
2: RS-485 serial communication. Keypad STOP disabled.
3: CANopen communication card
4: Reserved
5: Communication card (not include CANopen card

- It is used to set the source of the operation frequency in HAND mode.
- Pr.00-20 and 00-21 are for the settings of frequency source and operation source in AUTO mode. Pr.00-30 and 00-31 are for the settings of frequency source and operation source in HAND mode. The AUTO/HAND mode can be switched by the keypad KPC-CC01 or multi-function input terminal (MI).
- The factory setting of frequency source or operation source is for AUTO mode. It will return to AUTO mode whenever power on again after power off. If there is multi-function input terminal used to switch AUTO/HAND mode. The highest priority is the multi-function input terminal. When the external terminal is OFF, the drive won’t receive any operation signal and can’t execute JOG.

00-32 Digital Keypad STOP Function

Factory Setting: 0

Settings 0: STOP key disable
1: STOP key enable

This parameter works when the source of operation command is not digital keypad (Pr00-21≠0). When Pr00-21=0, the stop key will not follow the setting of this parameter.

00-33 ~ 00-39 Reserved

00-40 Homing mode

Factory Setting: 0000h

Settings:

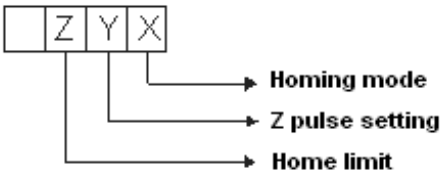

Note: Forward run = clockwise (CW)
Reverse run = counterclockwise (CCW)

X
0: Forward run to home. Set PL forward limit as check point.
1: Reverse run (CCW) to home. Set NL reverse limit (CCWL) as check point.
2: Forward run to home. Set ORG : OFF→ON as check point.
3: Reverse to home. Set ORG : OFF→ON as check point.
4: Forward run and search for Z-pulse as check point.
5: Forward run and search for Z-pulse as check point.
6: Forward run to home. Set ORG: ON→OFF as check point.
7: Reverse run to home. Set ORG : ON→OFF as check point.
8: Define current position as home.

Y
Set X to 0, 1, 2, 3, 6, 7 .
0: reverse run to Z pulse
1: continue forward run to Z pulse
2: Ignore Z pulse

Z
When home limit is reached, set X to 2, 3, 4, 5, 6, 7 first.
0: display error
1: reverse the direction

Homing action is control by Pr. 00-40, 00-41, 00-42 and 02-01~02-08.

1. When Y=0, X=0 or Y=0, X=2

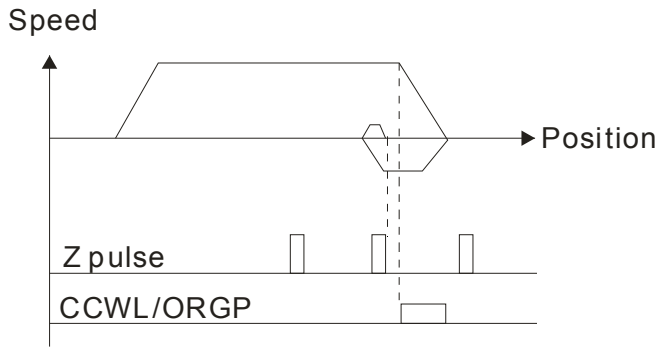

2. When Y=0, X=1 or Y=0, X=3

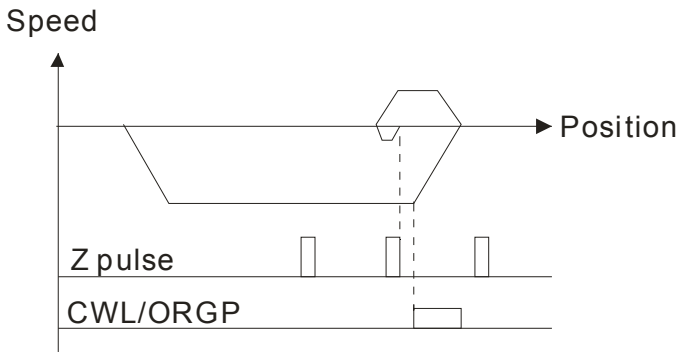

3. When Y=1, X=2

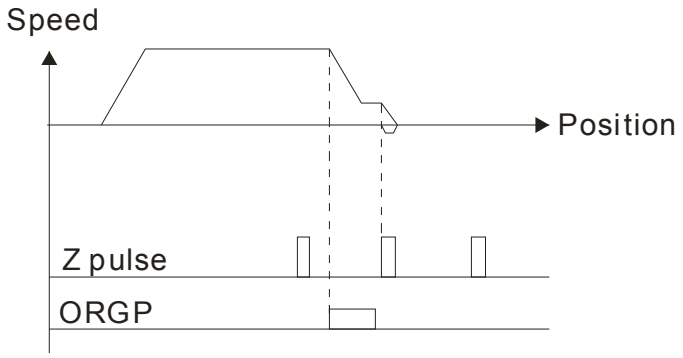

4. When Y=1, X=3

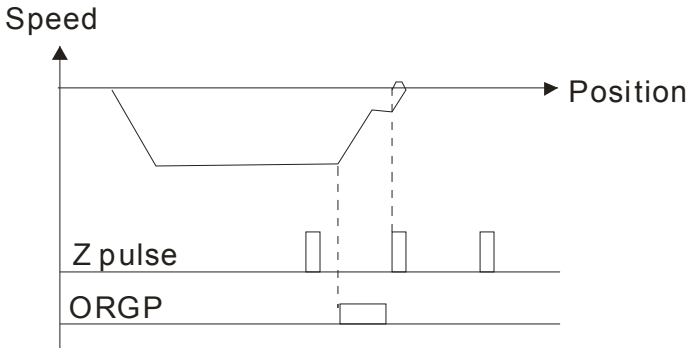

5. When Y=2, X=2

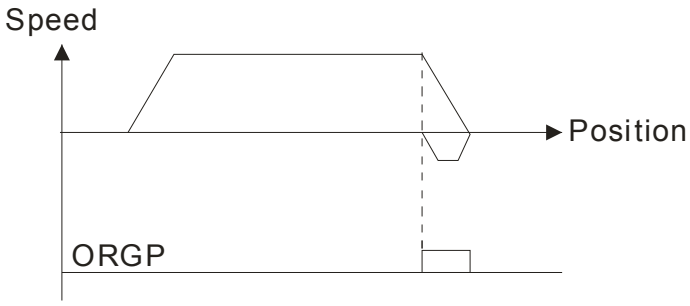

6. When Y=2, X=3

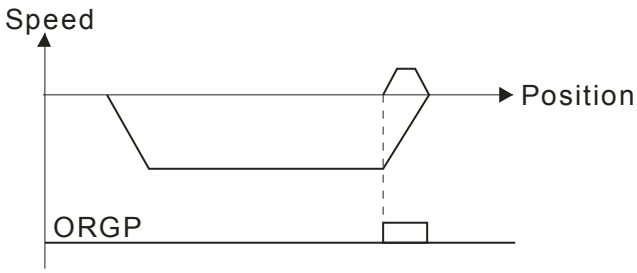

7. When Y=2, X=4

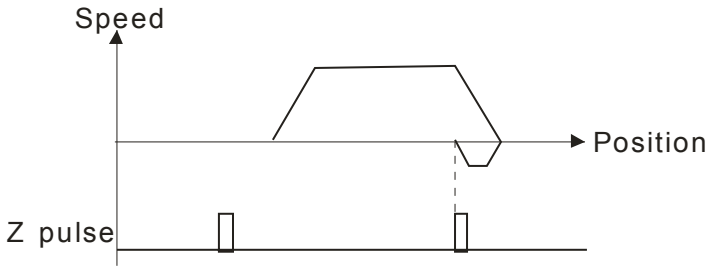

8. When Y=2, X=5

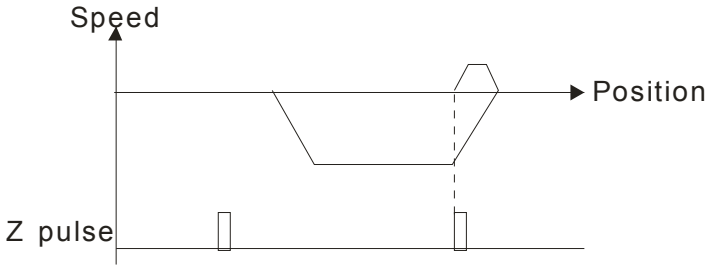

00-41 Homing by Frequency 1

Factory Setting: 8.00

Settings 0.00~599.00Hz

00-42 Homing by Frequency 2

Factory Setting: 2.00

Settings 0.00~599.00Hz

Control by Multi-function Input Terminal Pr. 02-01~02-08 (44~47).

44: Reverse direction homing

45: Forward direction homing

46: Homing (ORG)

47: Homing function enabled

- If the drive is not control by CAN or PLC, set Pr.00-10 =1 (Contorl mode = P2P position control) and set external output terminal to 47 (homing function enable) for homing.
- When Pr.00-10 is set to 3, after homing is complete, user must set control mode setting Pr.00-10 to 1 in order to perform P2P position control.

00-43 ~ 00-47	Reserved

00-48	Display Filter Time (Current)

Factory Settings: 0.100

Settings: 0.001~65.535 sec

- Set this parameter to minimize the current fluctuation displayed by digital keypad.

00-49	Display Filter Time (Keypad)

Factory Settings: 0.100

Settings: 0.001~65.535 sec

- Set this parameter to minimize the display value fluctuation displayed by digital keypad.

00-50	Software Version (date)

Factory Settings: ####

Settings: Read only

- This parameter displays the drive's software version by date.

00-51 ~ 00-61	Reserved

01 Basic Parameters

✎ This parameter can be set during operation.

01-00	Maximum Output Frequency

Factory Setting: 60.00/50.00

Settings 00.00~599.00Hz

📖 This parameter determines the AC motor drive's Maximum Output Frequency. All the AC motor drive frequency command sources (analog inputs 0 to +10V, 4 to 20mA, 0 to 20mAand ±10V) are scaled to correspond to the output frequency range.

📖 In light and normal duty: 0~599Hz

📖 In heavy duty:0~300Hz

01-01	Output Frequency of Motor 1（base frequency and motor rated frequency）
01-35	Output Frequency of Motor 2（base frequency and motor rated frequency）

Factory Setting: 60.00/50.00

Settings 0.00~599.00Hz

📖 This value should be set according to the rated frequency of the motor as indicated on the motor nameplate. If the motor is 60Hz, the setting should be 60Hz. If the motor is 50Hz, it should be set to 50Hz.

01-02	Output Voltage of Motor 1（base frequency and motor rated frequency）
01-36	Output Voltage of Motor 2（base frequency and motor rated frequency）

Factory Setting: 500.0/660.0

Settings 575V series: 0.0~600.0V
690V series: 0.0~720.0V

📖 This value should be set according to the rated voltage of the motor as indicated on the motor nameplate. If the motor is 575V, the setting should be 575.0. If the motor is 690V, it should be set to 690.0.

📖 There are many motor types in the market and the power system for each country is also difference. The economic and convenience method to solve this problem is to install the AC motor drive. There is no problem to use with the different voltage and frequency and also can amplify the original characteristic and life of the motor.

01-03	Mid-point Frequency 1 of Motor 1

Factory Setting: 0.00

Settings 0.00~599.00Hz

✎ 01-04	Mid-point Voltage 1 of Motor 1

Factory Setting: 0.0/0.0

Settings 575V series: 0.0~600.0V
690V series: 0.0~720.0V

01-37	Mid-point Frequency 1 of Motor 2

Factory Setting: 0.00

Settings 0.00~599.00Hz

✓	01-38	Mid-point Voltage 1 of Motor 2

Factory Setting: 0.0/0.0

Settings 575V series: 0.0~600.0V
690V series: 0.0~720.0V

	01-05	Mid-point Frequency 2 of Motor 1

Factory Setting: 0.00

Settings 0.00~599.00Hz

✓	01-06	Mid-point Voltage 2 of Motor 1

Factory Setting: 0.0/0.0

Settings 575V series: 0.0~600.0V
690V series: 0.0~720.0V

	01-39	Mid-point Frequency 2 of Motor 2

Factory Setting: 0.00

Settings 0.00~599.00Hz

✓	01-40	Mid-point Voltage 2 of Motor 2

Factory Setting: 0.0/0.0

Settings 575V series: 0.0~600.0V
690V series: 0.0~720.0V

	01-07	Min. Output Frequency of Motor 1

Factory Setting: 0.00

Settings 0.00~599.00Hz

✓	01-08	Min. Output Voltage of Motor 1

Factory Setting: 0.0/0.0

Settings 575V series: 0.0~600.0V
690V series: 0.0~720.0V

	01-41	Min. Output Frequency of Motor 2

Factory Setting: 0.00

Settings 0.00~599.00Hz

✓	01-42	Min. Output Voltage of Motor 2

Factory Setting: 0.0/0.0

Settings 575V series: 0.0~600.0V
690V series: 0.0~720.0V

- V/f curve setting is usually set by the motor's allowable loading characteristics. Pay special attention to the motor's heat dissipation, dynamic balance, and bearing lubricity, if the loading characteristics exceed the loading limit of the motor.
- There is no limit for the voltage setting, but a high voltage at low frequency may cause motor damage, overheat, and stall prevention or over-current protection. Therefore, please use the low voltage at the low frequency to prevent motor damage.
- Pr.01-35 to Pr.01-42 is the V/f curve for the motor 2. When multi-function input terminals Pr.02-01~02-08 and Pr.02-26 ~Pr.02-31 are set to 14 and enabled, the AC motor drive will act as the 2nd V/f curve.

📖 The V/f curve for the motor 1 is shown as follows. The V/f curve for the motor 2 can be deduced from it.

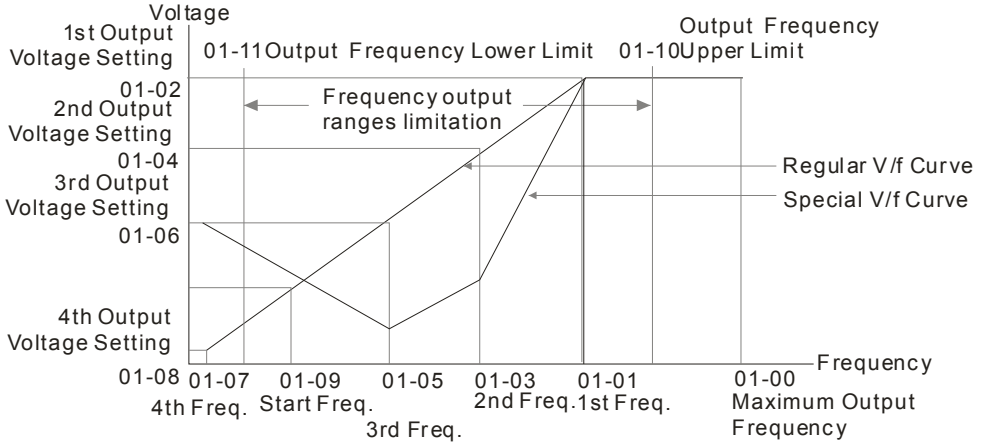

V/f Curve

Common settings of V/f curve:

(1) General purpose

Motor spec. 60Hz

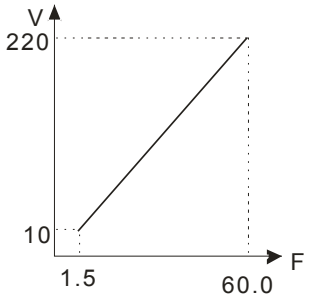

Pr.	Setting
01-00	60.0
01-01	60.0
01-02	220.0
01-03 01-05	1.50
01-04 01-06	10.0
01-07	1.50
01-08	10.0

Motor spec. 50Hz

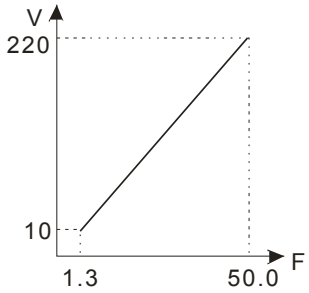

Pr.	Setting
01-00	50.0
01-01	50.0
01-02	220.0
01-03 01-05	1.30
01-04 01-06	10.0
01-07	1.30
01-08	10.0

(2) Fan and hydraulic machinery

Motor spec. 60Hz

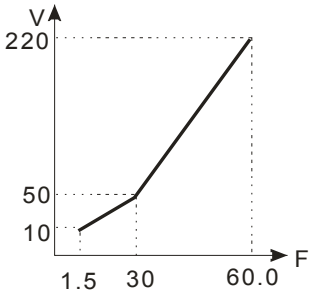

Pr.	Setting
01-00	60.0
01-01	60.0
01-02	220.0
01-03 01-05	30.0
01-04 01-06	50.0
01-07	1.50
01-08	10.0

Motor spec. 50Hz

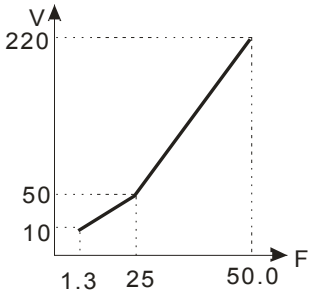

Pr.	Setting
01-00	50.0
01-01	50.0
01-02	220.0
01-03 01-05	25.0
01-04 01-06	50.0
01-07	1.30
01-08	10.0

(3) High starting torque

Motor spec. 60Hz

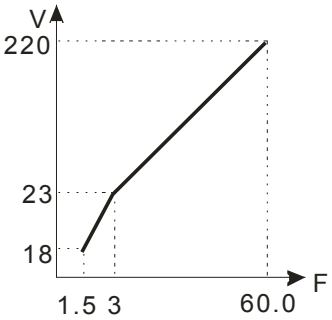

Pr.	Setting
01-00	60.0
01-01	60.0
01-02	220.0
01-03 01-05	3.00
01-04 01-06	23.0
01-07	1.50
01-08	18.0

Motor spec. 50Hz

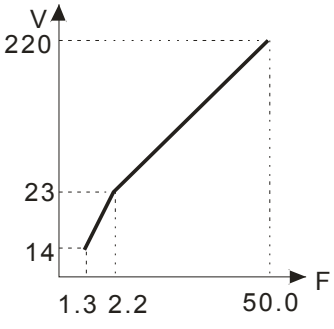

Pr.	Setting
01-00	50.0
01-01	50.0
01-02	220.0
01-03 01-05	2.20
01-04 01-06	23.0
01-07	1.30
01-08	14.0

01-09 Start-Up Frequency

Factory Setting: 0.50

Settings 0.0~599.00Hz

- When start frequency is higher than the min. output frequency, drives' output will be from start frequency to the setting frequency. Please refer to the following diagram for details.
- Fcmd=frequency command,
  Fstart=start frequency (Pr.01-09),
  fstart=actual start frequency of drive,
  Fmin=4th output frequency setting (Pr.01-07/Pr.01-41),
  Flow=output frequency lower limit (Pr.01-11)
- Fcmd>Fmin and Fcmd<Fstart:
  - If Flow<Fcmd， drive will run with Fcmd directly.
  - If Flow>=Fcmd, drive will run with Fcmd firstly, then, accelerate to Flow according to acceleration time.
- The drive's output will stop immediately when output frequency has reach to Fmin during deceleration.

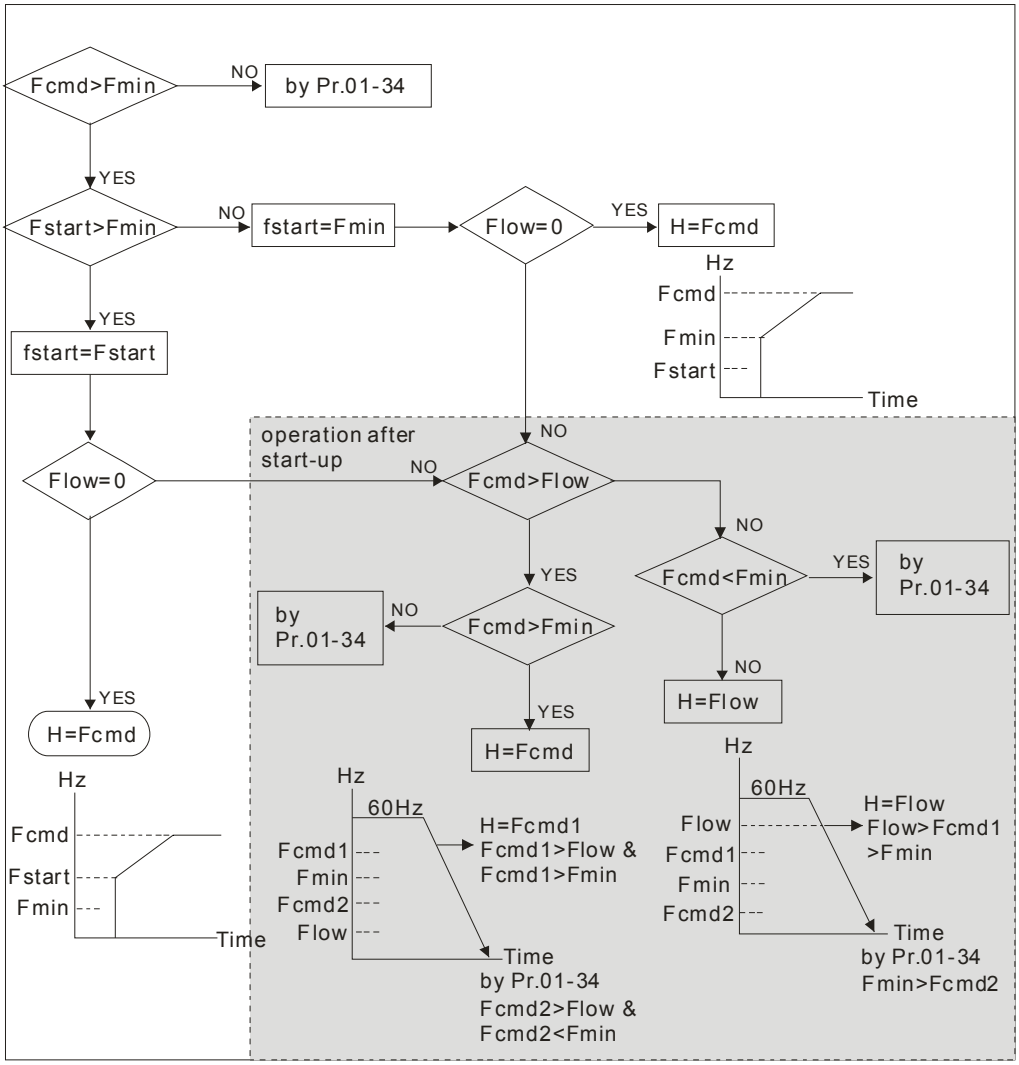

01-10 Output Frequency Upper Limit

Factory Setting: 599.00

Settings 0.0~599.00Hz

01-11 Output Frequency Lower Limit

Factory Setting: 0.00

Settings 0.0~599.00Hz

- The upper/lower output frequency setting is used to limit the actual output frequency. If the frequency setting is higher than the upper limit (01-10), it will run with the upper limit frequency. If output frequency lower than output frequency lower limit (01-11) and frequency setting is higher than min. frequency (01-07), it will run with lower limit frequency. The upper limit frequency should be set to be higher than the lower limit frequency. Pr.01-10 setting must be ≥ Pr.01-11 setting.
- Upper output frequency will limit the max. Output frequency of drive. If frequency setting is higher than Pr.01-10, the output frequency will be limited by Pr.01-10 setting.
- When the drive starts the function of slip compensation (Pr.07-27) or PID feedback control, drive output frequency may exceed frequency command but still be limited by this setting.
- Related parameters: Pr.01-00 Max. Operation Frequency and Pr.01-11 Output Frequency Lower Limit

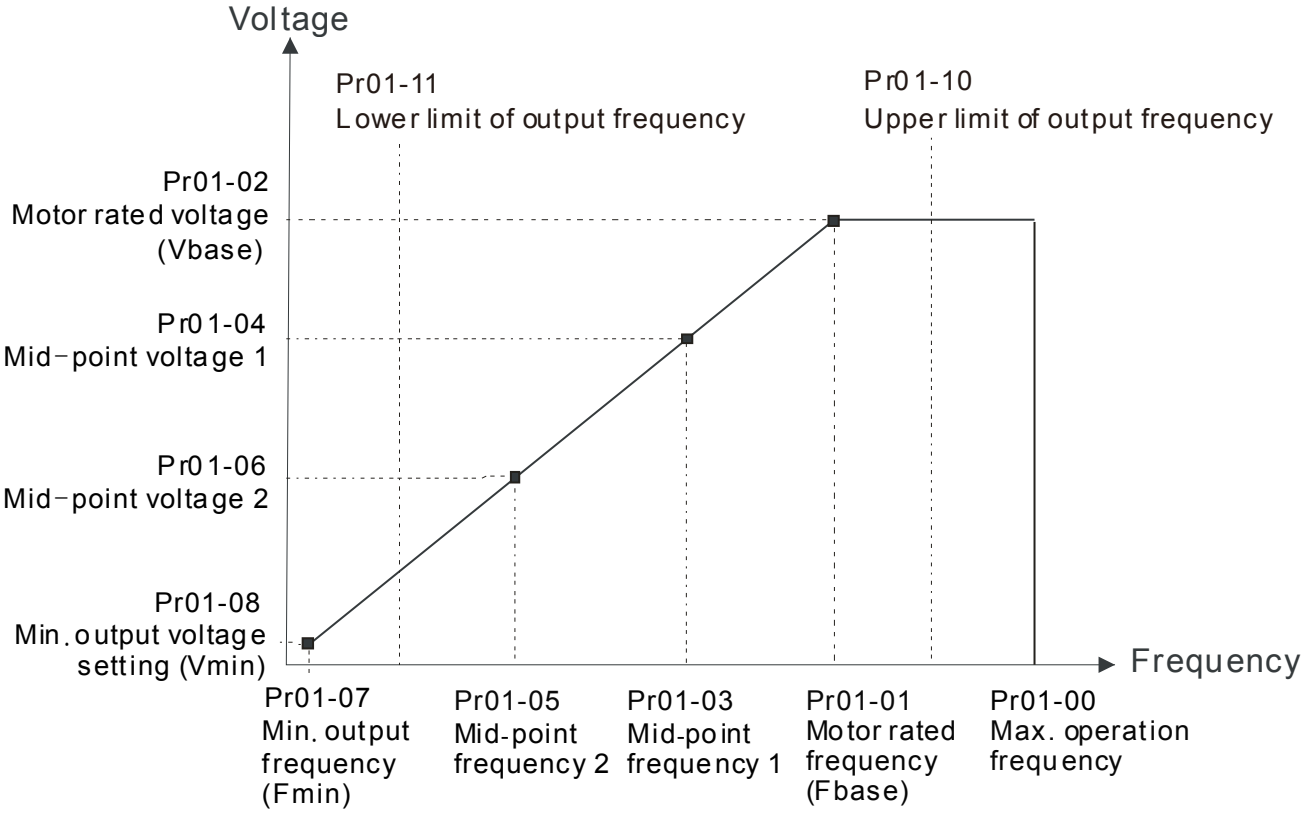

- Lower output frequency will limit the min. output frequency of drive. When drive frequency command or feedback control frequency is lower than this setting, drive output frequency will limit by the lower limit of frequency.
- When the drive starts, it will operate from min. output frequency (Pr.01-07) and accelerate to the setting frequency. It won't limit by lower output frequency setting.
- The setting of output frequency upper/lower limit is used to prevent personal misoperation, overheat due to too low operation frequency or damage due to too high speed.

- If the output frequency upper limit setting is 50Hz and frequency setting is 60Hz, max. output frequency will be 50Hz.
- If the output frequency lower limit setting is 10Hz and min. operation frequency setting (Pr.01-07) is 1.5Hz, it will operate by 10Hz when the frequency command is greater than Pr.01-07 and less than 10Hz. If the frequency command is less than Pr.01-07, the drive will be in ready status and no output.
- If the frequency output upper limit is 60Hz and frequency setting is also 60Hz, only frequency command will be limit in 60Hz. Actual frequency output may exceed 60Hz after slip compensation.

✓	01-12	Accel. Time 1
✓	01-13	Decel. Time 1
✓	01-14	Accel. Time 2
✓	01-15	Decel. Time 2
✓	01-16	Accel. Time 3
✓	01-17	Decel. Time 3
✓	01-18	Accel. Time 4
✓	01-19	Decel. Time 4
✓	01-20	JOG Acceleration Time
✓	01-21	JOG Deceleration Time

Factory Setting: 10.00/10.0
Motor drive with 30HP and above: 60.00/60.0
Motor drive with 215HP and above: 80.00/80.0

Settings Pr.01-45=0: 0.00~600.00 seconds
Pr.01-45=1: 0.00~6000.00 seconds

- The Acceleration Time is used to determine the time required for the AC motor drive to ramp from 0Hz to Maximum Output Frequency (Pr.01-00).
- The Deceleration Time is used to determine the time require for the AC motor drive to decelerate from the Maximum Output Frequency (Pr.01-00) down to 0Hz.
- The Acceleration/Deceleration Time is invalid when using Pr.01-44 Optimal Acceleration/Deceleration Setting.
- The Acceleration/Deceleration Time 1, 2, 3, 4 are selected according to the Multi-function Input Terminals settings. The factory settings are Accel./Decel. time 1.
- When enabling torque limits and stalls prevention function, actual accel./decel. time will be longer than the above action time.
- Please note that it may trigger the protection function (Pr.06-03 Over-current Stall Prevention during Acceleration or Pr.06-01 Over-voltage Stall Prevention) when setting of accel./decel. time is too short.
- Please note that it may cause motor damage or drive protection enabled due to over current during acceleration when the setting of acceleration time is too short.
- Please note that it may cause motor damage or drive protection enabled due to over current during deceleration or over-voltage when the setting of deceleration time is too short.

- It can use suitable brake resistor (see Chapter 06 Accessories) to decelerate in a short time and prevent over-voltage.
- When enabling Pr.01-24~Pr.01-27, the actual accel./decel. time will be longer than the setting.

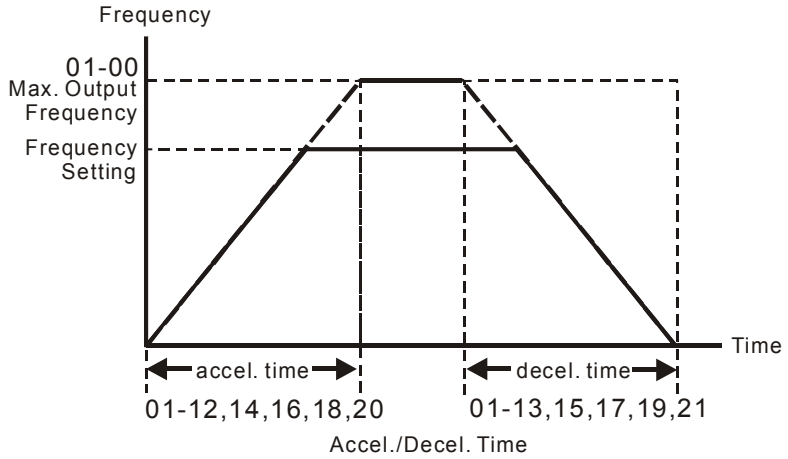

01-22 JOG Frequency

Factory Setting: 6.00

Settings 0.00~599.00Hz

- Both external terminal JOG and key “F1” on the keypad KPC-CC01 can be used. When the jog command is ON, the AC motor drive will accelerate from 0Hz to jog frequency (Pr.01-22). When the jog command is OFF, the AC motor drive will decelerate from Jog Frequency to zero. The Jog Accel./Decel. time (Pr.01-20, Pr.01-21) is the time that accelerates from 0.0Hz to Pr.01-22 JOG Frequency.
- The JOG command can’t be executed when the AC motor drive is running. In the same way, when the JOG command is executing, other operation commands are invalid.
- It does not support JOG function in the optional keypad KPC-CE01.

01-23 1st/4th Accel./decel. Frequency

Factory Setting: 0.00

Settings 0.00~599.00Hz

- The transition from acceleration/deceleration time 1 to acceleration/deceleration time 4, may also be enabled by the external terminals. The external terminal has priority over Pr. 01-23.
- When using this function, please set S-curve acceleration time as 0 if 4th acceleration time is set too short.

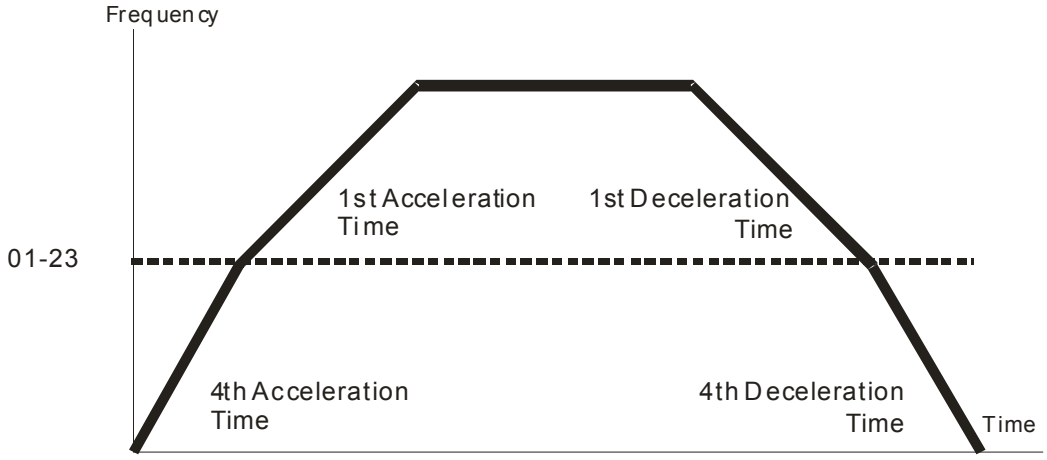

1st/4th Acceleration/Deceleration Frequency Switching

01-24	S-curve Acceleration Begin Time 1
01-25	S-curve Acceleration Arrival Time 2
01-26	S-curve Deceleration Begin Time 1
01-27	S-curve Deceleration Arrival Time 2

Factory Setting: 0.20/0.2

Settings Pr.01-45=0: 0.00~25.00 seconds
Pr.01-45=1: 0.00~250.0 seconds

- It is used to give the smoothest transition between speed changes. The accel./decel. curve can adjust the S-curve of the accel./decel. When it is enabled, the drive will have different accel./decel. curve by the accel./decel. time.
- The S-curve function is disabled when accel./decel. time is set to 0.

- When Pr.01-12, 01-14, 01-16, 01-18 ≥ Pr.01-24 and Pr.01-25,
  The Actual Accel. Time = Pr.01-12, 01-14, 01-16, 01-18 + (Pr.01-24 + Pr.01-25)/2
- When Pr.01-13, 01-15, 01-17, 01-19 ≥ Pr.01-26 and Pr.01-27,
  The Actual Decel. Time = Pr.01-13, 01-15, 01-17, 01-19 + (Pr.01-26 + Pr.01-27)/2

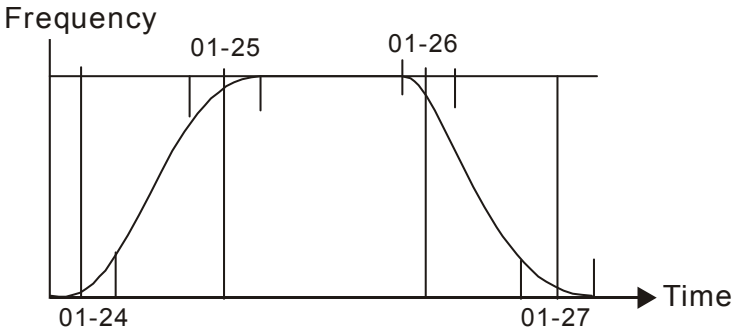

01-28	Skip Frequency 1 (upper limit)
01-29	Skip Frequency 1 (lower limit)
01-30	Skip Frequency 2 (upper limit)
01-31	Skip Frequency 2 (lower limit)
01-32	Skip Frequency 3 (upper limit)

01-33 Skip Frequency 3 (lower limit)

Factory Setting: 0.00

Settings 0.00~599.00Hz

- These parameters are used to set the skip frequency of the AC drive. But the frequency output is continuous. There is no limit for the setting of these six parameters and can be used as required.
- The skip frequencies are useful when a motor has vibration at a specific frequency bandwidth. By skipping this frequency, the vibration will be avoided. It offers 3 zones for use.
- These parameters are used to set the skip frequency of the AC drive. But the frequency output is continuous. The limit of these six parameters is 01-28≥01-29≥01-30≥01-31≥01-32≥01-33. This function will be invalid when setting to 0.0.
- The setting of frequency command (F) can be set within the range of skip frequencies. In this moment, the output frequency (H) will be limited by these settings.
- When accelerating/decelerating, the output frequency will still pass the range of skip frequencies.

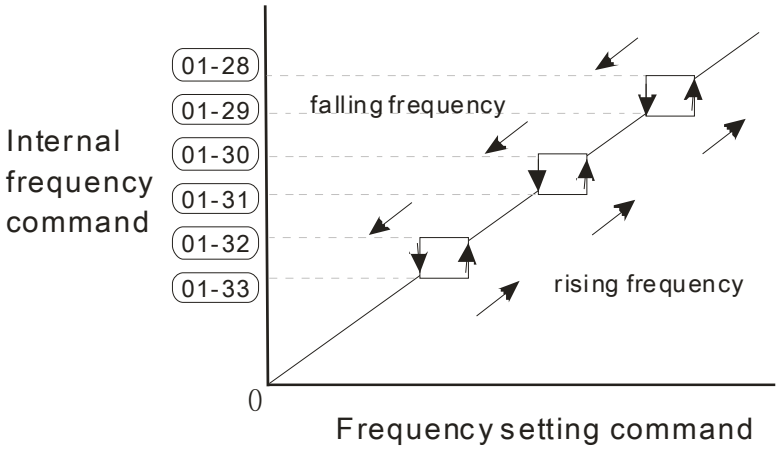

01-34 Zero-speed Mode

Factory Setting: 0

Settings 0: Output waiting
1: Zero-speed operation
2: Fmin (Refer to Pr.01-07, 01-41)

- When the frequency is less than Fmin (Pr.01-07 or Pr.01-41), it will operate by this parameter.
- When it is set to 0, the AC motor drive will be in waiting mode without voltage output from terminals U/V/W.
- When setting 1, it will execute DC brake by Vmin(Pr.01-08 and Pr.01-42) in V/F and SVC modes. It executes zero-speed operation in VFPG mode.
- When it is set to 2, the AC motor drive will run by Fmin (Pr.01-07, Pr.01-41) and Vmin (Pr.01-08, Pr.01-42) in V/F, VFPG, and SVC mode
- In V/F, VFPG, SVC modes:

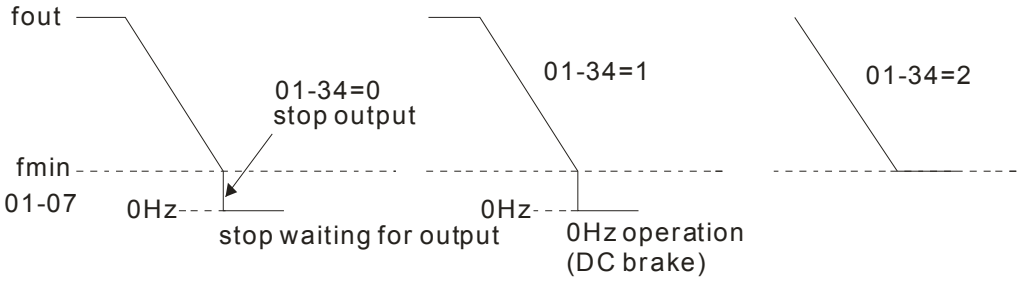

01-43 V/F Curve Selection

Factory Setting: 0

Settings 0: V/f curve determined by group 01

1: 1.5th V/F curve

2: 2nd V/F curve

- When setting to 0, refer to Pr.01-01~01-08 for motor 1 V/f curve. For motor 2, please refer to Pr.01-35~01-42.
- When setting to 1 or 2, 2nd and 3rd voltage frequency setting are invalid.
- If motor load is variable torque load (torque is in direct proportion to speed, such as the load of fan or pump), it can decrease input voltage to reduce flux loss and iron loss of the motor at low speed with low load torque to raise the entire efficiency.
- When setting higher power V/f curve, it is lower torque at low frequency and is not suitable for rapid acceleration/deceleration. It is recommended Not to use this parameter for the rapid acceleration/deceleration.

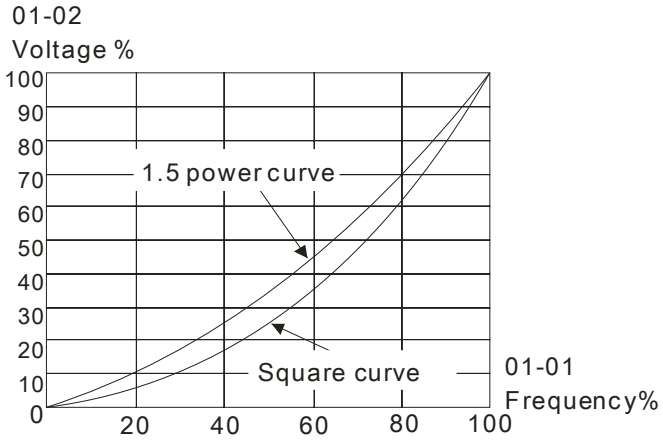

01-44 Optimal Acceleration/Deceleration Setting

Factory Setting: 0

Settings 0: Linear accel./decel.

1: Auto accel., linear decel.

2: Linear accel., auto decel.

3: Auto accel./decel. (auto calculate the accel./decel. time by actual load)

4: Stall prevention by auto accel./decel. (limited by 01-12 to 01-21)

- Setting 0 Linear accel./decel.: it will accelerate/decelerate according to the setting of Pr.01-12~01-19.

- Setting to Auto accel./decel.: it can reduce the mechanical vibration and prevent the complicated auto-tuning processes. It won't stall during acceleration and no need to use brake resistor. In addition, it can improve the operation efficiency and save energy.
- Setting 3 Auto accel./decel. (auto calculate the accel./decel. time by actual load): it can auto detect the load torque and accelerate from the fastest acceleration time and smoothest start current to the setting frequency. In the deceleration, it can auto detect the load re-generation and stop the motor smoothly with the fastest decel. time.
- Setting 4 Stall prevention by auto accel./decel. (limited by 01-12 to 01-21): if the acceleration/deceleration is in the reasonable range, it will accelerate/decelerate by Pr.01-12~01-19. If the accel./decel. time is too short, the actual accel./decel. time is greater than the setting of accel./decel. time.

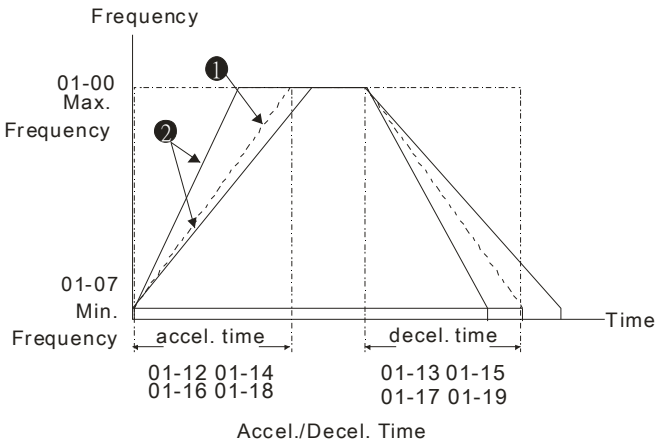

❶ When Pr.01-44 is set to 0.

❷ When Pr.01-44 is set to 3.

01-45 Time Unit for Acceleration/Deceleration and S Curve

Factory Setting: 0

Settings 0: Unit 0.01 sec

1: Unit 0.1 sec

01-46 Time for CANopen Quick Stop

Factory Setting: 1.00

Settings Pr. 01-45=0: 0.00~600.00 sec

Pr. 01-45=1: 0.0~6000.0 sec

- It is used to set the time that decelerates from the max. operation frequency (Pr.01-00) to 0.00Hz in CANopen control.

02 Digital Input/Output Parameter

This parameter can be set during operation.

02-00	2-wire/3-wire Operation Control

Factory Setting: 0

Settings 0: 2 wire mode 1
1: 2 wire mode 2
2: 3 wire mode

It is used to set the operation control method:

Pr.02-00	Control Circuits of the External Terminal
0 2-wire mode 1 FWD/STOP REV/STOP	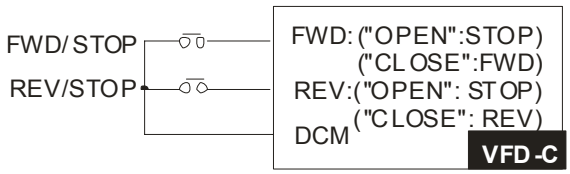
1 2-wire mode 2 RUN/STOP REV/FWD	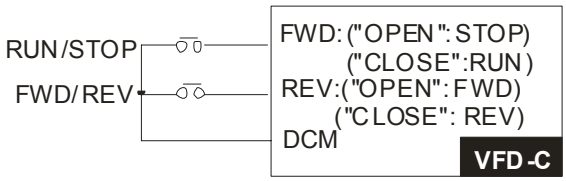
2 3-wire operation control	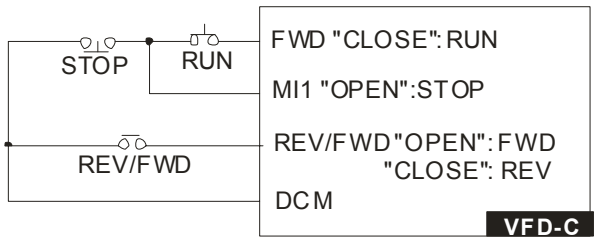

02-01	Multi-function Input Command 1 (MI1) (MI1= STOP command when in 3-wire operation control)

Factory Setting: 1

02-02	Multi-function Input Command 2 (MI2)

Factory Setting: 2

02-03	Multi-function Input Command 3 (MI3)

Factory Setting: 3

02-04	Multi-function Input Command 4 (MI4)

Factory Setting: 4

02-05	Multi-function Input Command 5 (MI5)
02-06	Multi-function Input Command 6 (MI6)
02-07	Multi-function Input Command 7 (MI7)
02-08	Multi-function Input Command 8 (MI8)
02-26	Input terminal of I/O extension card (MI10)
02-27	Input terminal of I/O extension card (MI11)

02-28	Input terminal of I/O extension card (MI12)
02-29	Input terminal of I/O extension card (MI13)
02-30	Input terminal of I/O extension card (MI14)
02-31	Input terminal of I/O extension card (MI15)

Factory Setting: 0

Settings

0: no function
1: multi-step speed command 1/multi-step position command 1
2: multi-step speed command 2/multi-step position command 2
3: multi-step speed command 3/multi-step position command 3
4: multi-step speed command 4/multi-step position command 4
5: Reset
6: JOG command (By KPC-CC01 or external control)
7: acceleration/deceleration speed not allow
8: the 1st, 2nd acceleration/deceleration time selection
9: the 3rd, 4th acceleration/deceleration time selection
10: EF Input (Pr.07-20)
11: B.B input from external (Base Block)
12: Output stop
13: cancel the setting of the optimal acceleration/deceleration time
14: switch between motor 1 and motor 2
15: operation speed command from AVI
16: operation speed command from ACI
17: operation speed command from AUI
18: Emergency stop (Pr.07-20)
19: Digital up command
20: Digital down command
21: PID function disabled
22: Clear counter
23: Input the counter value (MI6)
24: FWD JOG command
25: REV JOG command
26: FOCG/TQC model selection
27: ASR1/ASR2 selection
28: Emergency stop (EF1)
29: Signal confirmation for Y-connection
30: Signal confirmation for Δ-connection
31: High torque bias (Pr.11-30)
32: Middle torque bias (Pr.11-31)
33: Low torque bias (Pr.11-32)
34: Switch between multi-step position and multi-speed control
35: Enable position control
36: Enable multi-step position learning function (valid at stop)
37: Enable pulse position input command
38: Disable write EEPROM function
39: Torque command direction
40: Force coast to stop
41: HAND switch
42: AUTO switch
43: Enable resolution selection (Pr.02-48)
44: Reverse direction homing
45: Forward direction homing
46: Homing ORG
47: Homing function enable
48: Mechanical gear ratio switch
49: Drive enable

50: Slave dEb action to execute
51: Selection for PLC mode bit0
52: Selection for PLC mode bit1
53: Trigger CANopen quick stop
54: Reserved
55: Brake release checking signal
56: Local/Remote Selection
57~70: Reserve

- This parameter selects the functions for each multi-function terminal.
- The terminals of Pr.02-26~Pr.02-29 are virtual and set as MI10~MI13 when using with optional card EMC-D42A. Pr.02-30~02-31 are virtual terminals.
- When being used as a virtual terminal, it needs to change the status (0/1: ON/OFF) of bit 8-15 of Pr.02-12 by digital keypad KPC-CC01 or communication.
- If Pr.02-00 is set to 3-wire operation control. Terminal MI1 is for STOP contact. Therefore, MI1 is not allowed for any other operation.
- Summary of function settings (Take the normally open contact for example, ON: contact is closed, OFF: contact is open)

Settings	Functions	Descriptions
0	No Function	
1	Multi-step speed command 1/ multi-step position command 1	15 step speeds could be conducted through the digital status of the 4 terminals, and 16 in total if the master speed is included. (Refer to Parameter set 4)
2	Multi-step speed command 2/ multi-step position command 2	
3	Multi-step speed command 3/ multi-step position command 3	
4	Multi-step speed command 4/ multi-step position command 4	
5	Reset	After the error of the drive is eliminated, use this terminal to reset the drive.
6	JOG Command	This function is valid when the source of operation command is external terminals. Before executing this function, it needs to wait for the drive stop completely. During running, it can change the operation direction and STOP key on the keypad is valid. Once the external terminal receives OFF command, the motor will stop by the JOG deceleration time. Refer to Pr.01-20~01-22 for details. 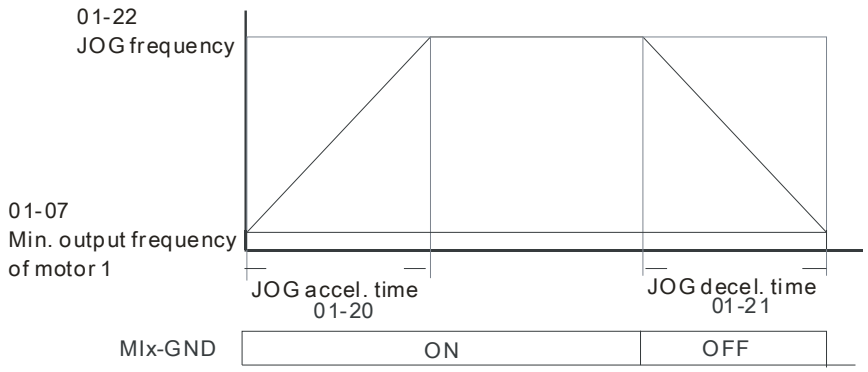

Settings	Functions	Descriptions
7	Acceleration/deceleration Speed Inhibit	When this function is enabled, acceleration and deceleration is stopped. After this function is disabled, the AC motor drive starts to accel./decel. from the inhibit point. 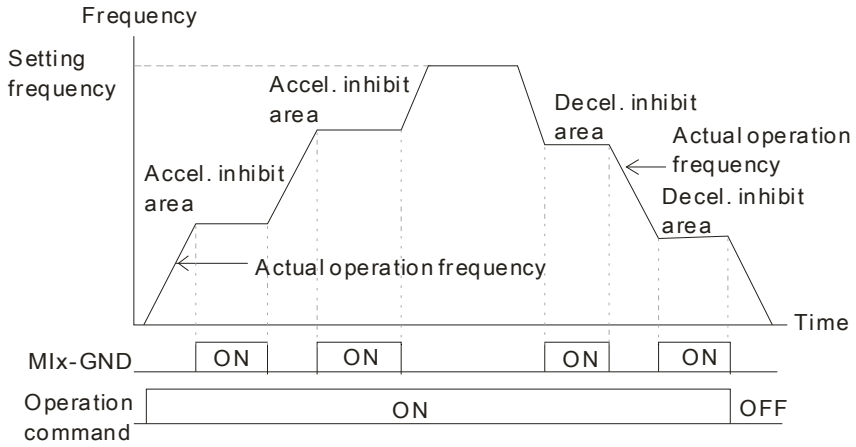
8	The 1st, 2nd acceleration or deceleration time selection	The acceleration/deceleration time of the drive could be selected from this function or the digital status of the terminals; there are 4 acceleration/deceleration speeds in total for selection.
9	The 3rd, 4th acceleration or deceleration time selection	
10	EF Input (EF: External fault)	For external fault input. Motor drive will decelerate by Pr.07-20 setting, keypad will show EF. (It will have fault record when external fault occurs). Until the causes of fault are eliminated, the drive can keep running after resetting.
11	External B.B. Input (Base Block)	When the contact of this function is ON, output of the drive will be cut off immediately, and the motor will be free run and keypad will display B.B. signal. Refer to Pr.07-08 for details.
12	Output Stop (Output pause)	If the contact of this function is ON, output of the drive will be cut off immediately, and the motor will then be free run. And once it is turned to OFF, the drive will accelerate to the setting frequency. 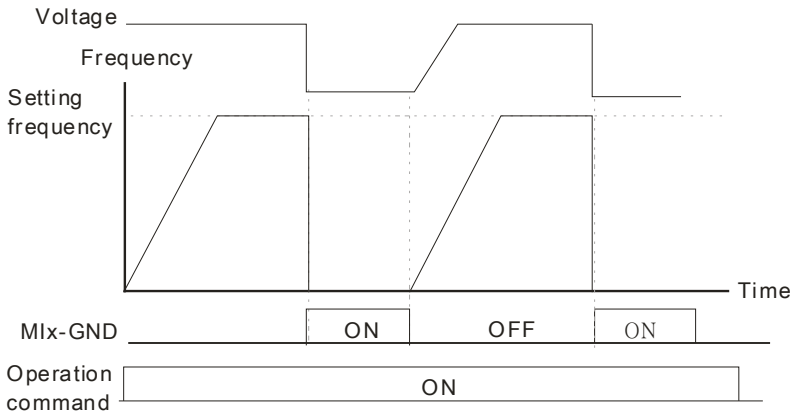
13	Cancel the setting of the optimal accel./decel. time	Before using this function, Pr.01-44 should be set to 01/02/03/04 first. When this function is enabled, OFF is for auto mode and ON is for linear accel./decel.
14	Switch between drive settings 1 and 2	When the contact of this function is ON: use motor 2 parameters. OFF: use motor 1 parameters.
15	Operation speed command form AVI	When the contact of this function is ON, the source of the frequency will force to be AVI. (If the operation speed commands are set to AVI, ACI and AUI at the same time. The priority is AVI＞ACI＞AUI)

Settings	Functions	Descriptions
16	Operation speed command form ACI	When the contact of this function is ON, the source of the frequency will force to be ACI. (If the operation speed commands are set to AVI, ACI and AUI at the same time. The priority is AVI＞ACI＞AUI)
17	Operation speed command form AUI	When the contact of this function is ON, the source of the frequency will force to be AUI. (If the operation speed commands are set to AVI, ACI and AUI at the same time. The priority is AVI＞ACI＞AUI)
18	Emergency Stop (07-20)	When the contact of this function is ON, the drive will ramp to stop by Pr.07-20 setting.
19	Digital Up command	When the contact of this function is ON, the frequency will be increased and decreased. If this function is constantly ON, the frequency will be increased/decreased by Pr.02-09/Pr.02-10. The frequency command returns to zero when the drive stops, and the display frequency is 0.00Hz. Select Pr11-00, Bit7=1, frequency is not saved.
20	Digital Down command	
21	PID function disabled	When the contact of this function is ON, the PID function is disabled.
22	Clear counter	When the contact of this function is ON, it will clear current counter value and display “0”. Only when this function is disabled, it will keep counting upward.
23	Input the counter value (multi-function input command 6)	The counter value will increase 1 once the contact of this function is ON. It needs to be used with Pr.02-19.
24	FWD JOG command	This function is valid when the source of operation command is external terminals. When the contact of this function is ON, the drive will execute forward Jog command. When execute JOG command under torque mode, the drive will automatically switch to speed mode; after JOG command is done, the drive will return to torque mode.
25	REV JOG command	This function is valid when the source of operation command is external terminals. When the contact of this function is ON the drive will execute reverse Jog command. When execute JOG command under torque mode, the drive will automatically switch to speed mode; after JOG command is done, the drive will return to torque mode.
26	FOCPG/TQCPG mode selection	When the contact of this function is ON: TQCPG mode. When the contact of this function is OFF: FOCPG mode. 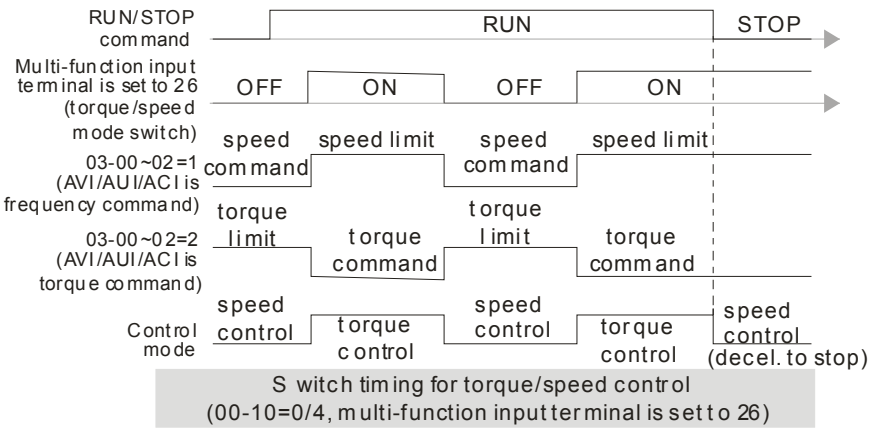
27	ASR1/ASR2 selection	When the contact of this function is ON: speed will be adjusted by ASR 2 setting. OFF: speed will be adjusted by ASR 1 setting. Refer to Pr.11-02 for details.

Settings	Functions	Descriptions
28	Emergency stop (EF1)	When the contact is ON, the drive will execute emergency stop and display EF1 on the keypad. The motor won't run and be in the free run until the fault is cleared after pressing RESET" (EF: External Fault) 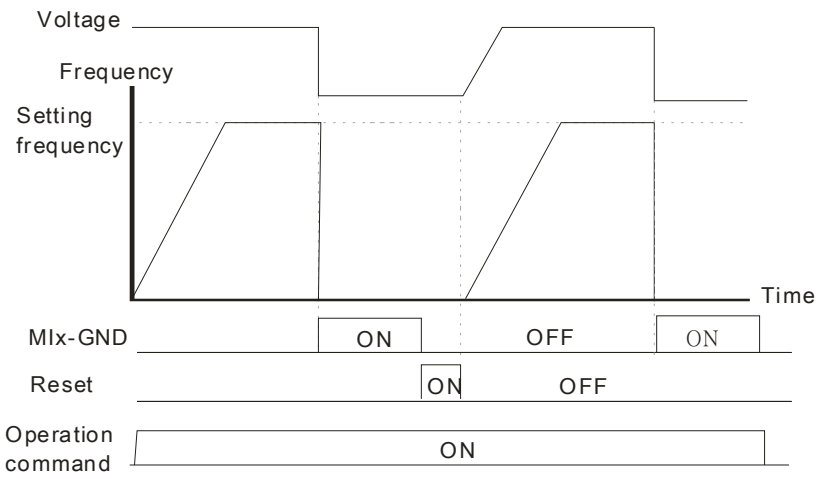
29	Signal confirmation for Y-connection	When is the contact of this function is ON, the drive will operate by 1st V/f.
30	Signal confirmation for Δ-connection	When the contact of this function is ON, the drive will operate by 2nd V/f.
31	High torque bias	Refer to Pr.11-30~11-32 for details.
32	Middle torque bias	
33	Low torque bias	
34	Switch between multi-step position and multi-speed control	When the contact of this function is ON, the corresponding 15-step speed for the multi-function inputs 1-4 will be 15 positions. (Refer to Pr.04-16 to Pr.04-44) 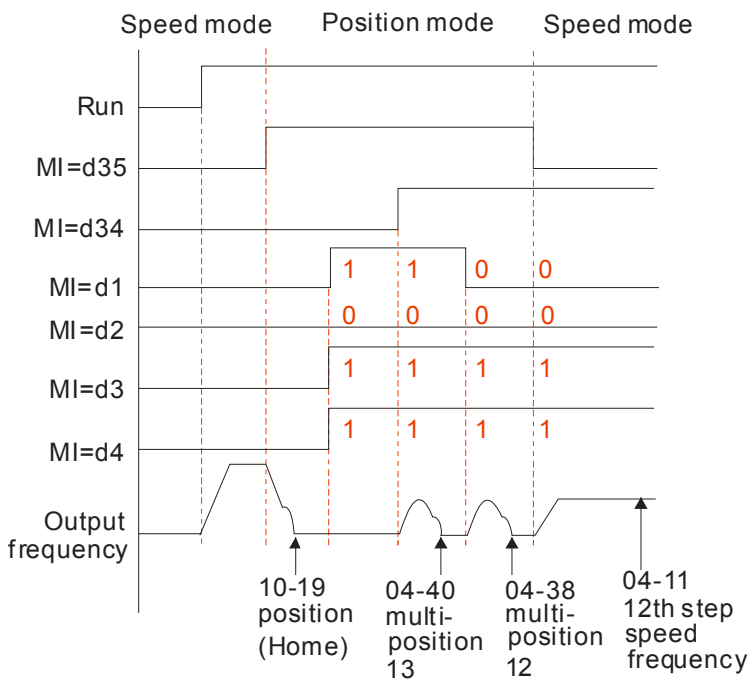

Settings	Functions	Descriptions
		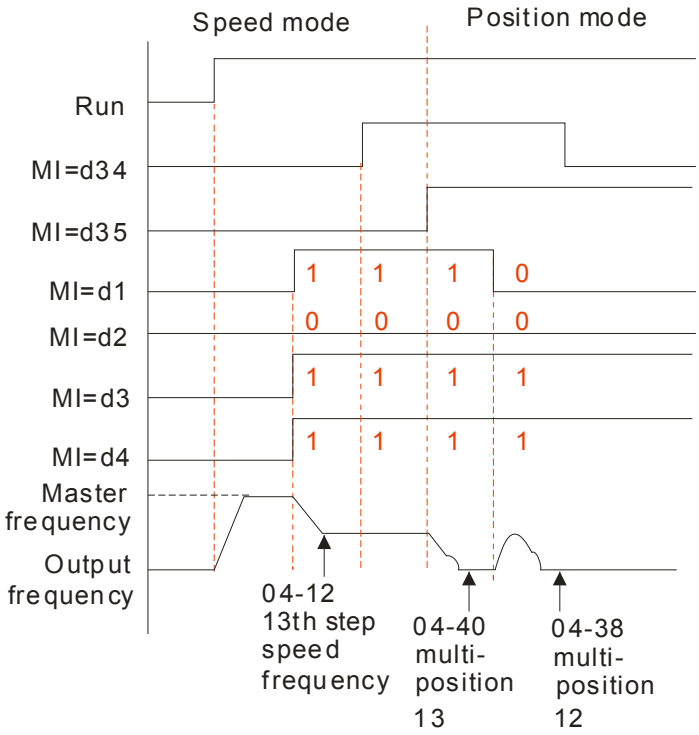
35	Enable single-point position control	When the contact of this function is ON, the AC motor drive will execute internal single-point position control according to the setting in Pr.10-19. This function is valid in FOCPG mode only. 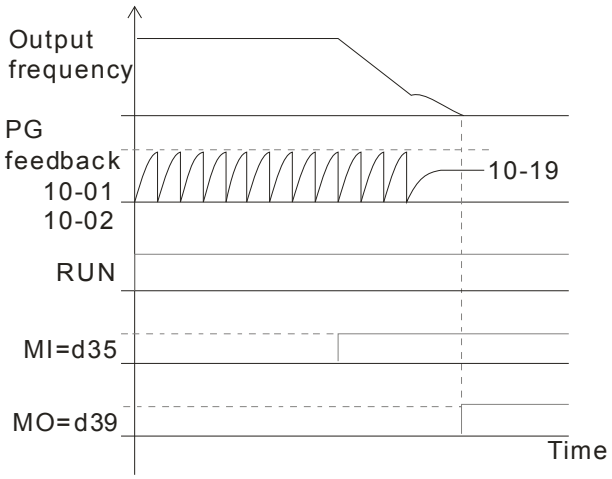 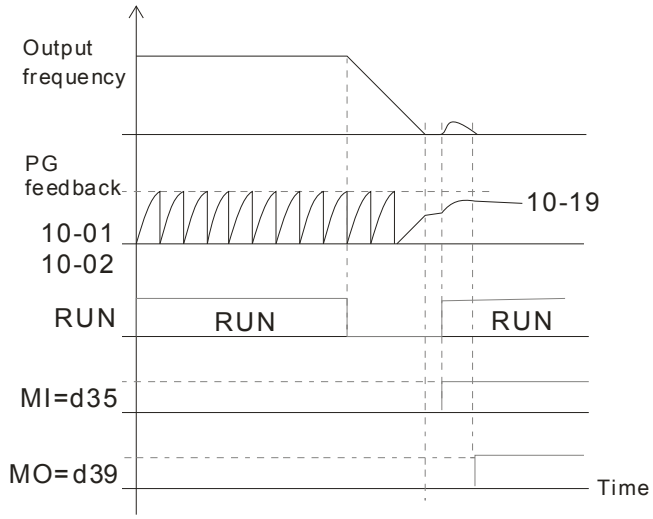

Settings	Functions	Descriptions
36	Enable multi-step position learning function (valid at stop)	When the contact of this function is ON/OFF, the drive will base the multi-function inputs 1-4 ON/OFF status to find the corresponding multi-step positions and write current motor position into such corresponding multi-step position. 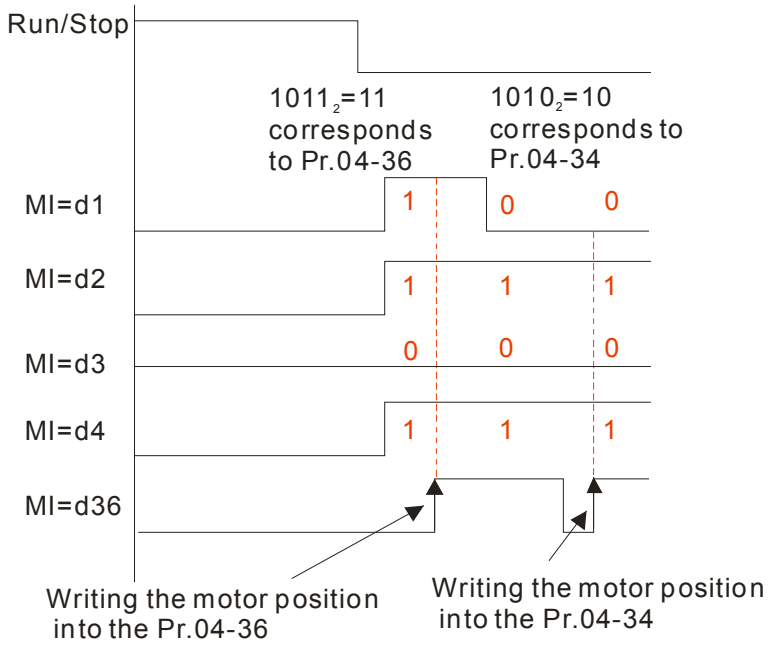
37	Full position control pulse command input enable	When Pr.00-20 is set to 4 or 5 and the contact of this function is ON, the input pulse of PG card is position command. When using this function, it is recommended to set Pr.11-25 to 0. Example: please refer to the following diagram when using this faction with MI=d35 return to home position,. 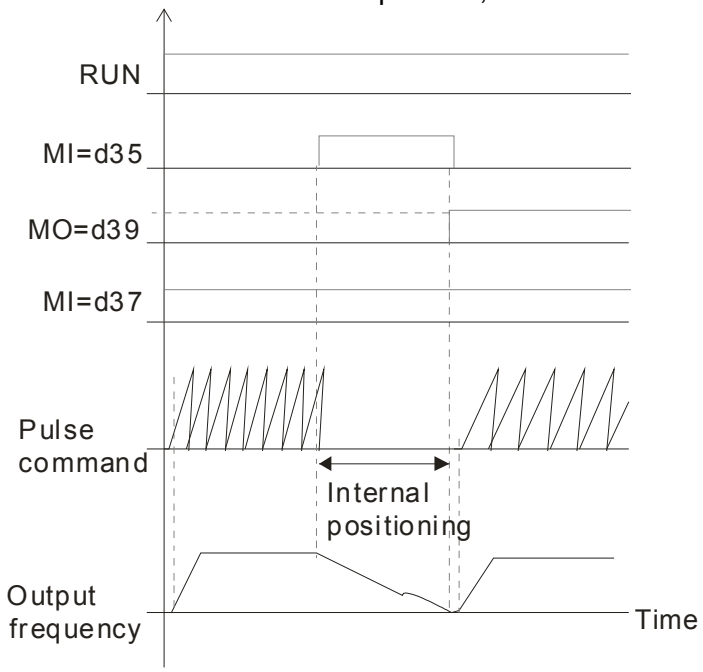
38	Disable EEPROM write function (Parameters written disable)	When the contact of this function is ON, write to EEPROM is disabled. (Changed parameters will not be saved after power off)
39	Torque command direction	For torque control (Pr.00-10=2), when torque command is AVI or ACI, the contact of this function is ON and it is negative torque.

<table>
<tr><th>Settings</th><th>Functions</th><th>Descriptions</th></tr>
<tr><td>40</td><td>Force coast to stop</td><td>When the contact of this function is ON during the operation, the drive will free run to stop.</td></tr>
<tr><td>41</td><td>HAND switch</td><td rowspan="2">1. When MI is switched to off status, it executes a STOP command. , If MI is switched to off during operation, the drive will also stop.
2. Using keypad KPC-CC01 to switch between HAND/AUTO, the drive will stop first then switch to the HAND or AUTO status.
3. On the digital keypad KPC-CC01, it will display current drive status (HAND/OFF/AUTO).
<table>
<tr><th></th><th>Bit 1</th><th>Bit 0</th></tr>
<tr><td>OFF</td><td>0</td><td>0</td></tr>
<tr><td>AUTO</td><td>0</td><td>1</td></tr>
<tr><td>HAND</td><td>1</td><td>0</td></tr>
<tr><td>OFF</td><td>1</td><td>1</td></tr>
</table></td></tr>
<tr><td>42</td><td>AUTO switch</td></tr>
<tr><td>43</td><td>Enable resolution selection</td><td>Refer to Pr.02-48 for details.</td></tr>
<tr><td>44</td><td>Reverse direction NLhoming</td><td>Signal input for reverse direction limit switch. When this terminal of this function is ON, the drive will react to the setting in Pr.00-40, 00-41, 00-42 accordingly to execute homing in a reverse direction (counter clockwise).
Note: NL means input terminal detection is negative-edge triggered or be regarded as NO(Normal Open)</td></tr>
<tr><td>45</td><td>Forward direction PL homing</td><td>Signal input for forward direction limit switch. When this terminal of this function is ON, the drive will react to the setting in Pr.00-40, 00-41, 00-42 accordingly to execute homing in a forward direction (clockwise).
Note: PL means input terminal detection is postive-edge triggered or be regarded as NC(Normal Close)</td></tr>
<tr><td>46</td><td>Homing ORG</td><td>ORG point input. When this terminal of this function is ON, the drive will refer to the setting in Pr.00-40, 00-41, 00-42 accordingly to execute homing.</td></tr>
<tr><td>47</td><td>Homing function enable</td><td>Pr.00-10 = 3 (homing mode), if the external terminal MIx=47 is OFF, the drive will ignore the home command and execute Point to Point position control.</td></tr>
<tr><td>48</td><td>Mechanical gear ratio switch</td><td>When this contact is ON, the mechanical gear ratio switch will be the second group A2/B2 (refer to Pr.10-08 and Pr.10-09).</td></tr>
<tr><td>49</td><td>Drive enable</td><td>When drive=enable, RUN command is valid.
When drive= disable, RUN command is invalid.
When drive is in operation, motor coast to stop.
This function will interact with MO=51</td></tr>
<tr><td>50</td><td>Slave dEb action to execute</td><td>Input the message setting in this parameter when dEb occurs to Master. This will ensure dEb also occurs to Slave, then Master and Slave will stop simultaneously.</td></tr>
<tr><td>51</td><td>Selection for PLC mode bit0</td><td rowspan="2">
<table>
<tr><th>PLC status</th><th>Bit 1</th><th>Bit 0</th></tr>
<tr><td>Disable PLC function (PLC 0)</td><td>0</td><td>0</td></tr>
<tr><td>Trigger PLC to operation (PLC 1)</td><td>0</td><td>1</td></tr>
<tr><td>Trigger PLC to stop (PLC 2)</td><td>1</td><td>0</td></tr>
<tr><td>No function</td><td>1</td><td>1</td></tr>
</table></td></tr>
<tr><td>52</td><td>Selection for PLC mode bit1</td></tr>
<tr><td>53</td><td>Enable CANopen quick stop</td><td>When this function is enabled under CANopen control, it will change to quick stop. Refer to Chapter 15 for more details.</td></tr>
<tr><td>54</td><td colspan="2">Reserved</td></tr>
</table>

Settings	Functions	Descriptions
55	Brake release checking signal	This parameter needs to be used with P02-56. The main purpose is to make sure if mechanical brake works or not after triggering brake release command. If the action is right, mechanical brake will give signal to MI terminal. Please check time sequence chart for reference.
56	LOCAL/REMOTE Selection	Use Pr.00-29 to select for LOCAL/REMOTE mode (refer to Pr.00-29). When Pr.00-29 is not set to 0, on the digital keypad KPC-CC01 it will display LOC/REM status. (It will display on the KPC-CC01 if the firmware version is above version 1.021). (Bit 0: REM = 0, LOC = 1)

02-09 UP/DOWN Key Mode

Factory Setting: 0

Settings 0: Up/down by the accel/decel time

1: Up/down constant speed (Pr.02-10)

02-10 Constant speed. The Accel. /Decel. Speed of the UP/DOWN Key

Factory Setting: 0.01

Settings 0.001~1.000Hz/ms

- These settings are used when multi-function input terminals are set to 19/20. Refer to Pr.02-09 and 02-10 for the frequency up/down command.
- Pr11-00, Bit7=1, frequency command is not saved. The frequency command returns to zero when the drive stops, and the display frequency is 0.00Hz. The frequency command increase/decrease by using Up/Down key is effective only when the drive is at Running status.
- Pr.02-09 set to 0: it will increase/decrease frequency command (F) by the setting of acceleration/deceleration (Pr.01-12~01-19)

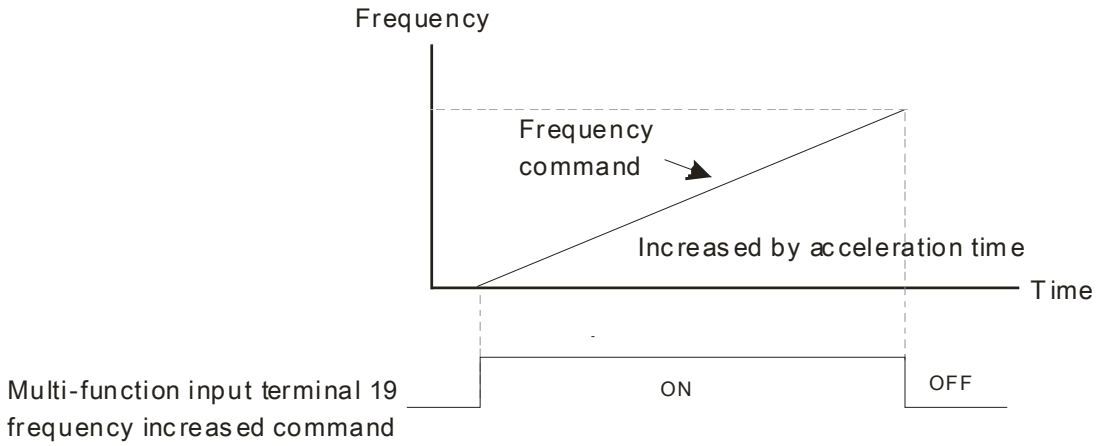

Pr.02-09 set to 1: use multi-function input terminal ON/OFF to increase/decrease the frequency command(F) according to the setting of Pr.02.10(0.01~1.00Hz/ms).

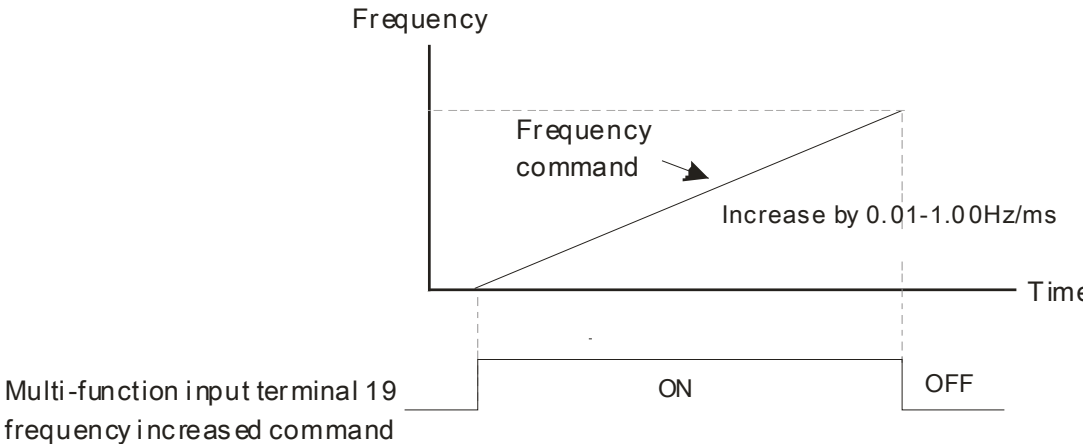

02-11 Digital Input Response Time

Factory Setting: 0.005

Settings 0.000~30.000 sec

- This parameter is used to set the response time of digital input terminals FWD, REV and MI1~MI8.
- It is used for digital input terminal signal delay and confirmation. The delay time is confirmation time to prevent some uncertain interference that would cause error in the input of the digital terminals. Under this condition, confirmation for this parameter would improve effectively, but the response time will be somewhat delayed.
- When using MI8 as encoder pulse feedback input, this parameter will not be referred.

02-12 Digital Input Operation Setting

Factory Setting: 0000

Settings 0000h~FFFFh (0: N.O ; 1: N.C)

- The setting of this parameter is in hexadecimal.
- This parameter is to set the status of multi-function input signal (0: Normal Open；1: Normal Close) and it is not affected by the SINK/SOURCE status.
- Bit0 is for FWD terminal, bit1 is for REV terminal and Bit2 to Bit15 is for MI1 to MI14.
- User can change terminal status by communicating.
  For example, MI1 is set to 1 (multi-step speed command 1), MI2 is set to 2 (multi-step speed command 2). Then the forward + 2nd step speed command=1001(binary)=9 (Decimal).
  Pr.02-12=9 needs to be set by communication to run forward with 2nd step speed. No need to wire any multi-function terminal.

Bit15	Bit14	Bit13	Bit12	Bit11	Bit10	Bit9	Bit8	Bit7	Bit6	Bit5	Bit4	Bit3	Bit2	Bit1	Bit0
MI14	MI13	MI12	MI11	MI10	MI9	MI8	MI7	MI6	MI5	MI4	MI3	MI2	MI1		

- Through the Pr11-42, Bit 1, it could make setting of FWD/REV terminals whether are controlled by Pr02-12, Bit 0 & 1.

02-13	Multi-function Output 1 (Relay1)
	Factory Setting: 11
02-14	Multi-function Output 2 (Relay2)
	Factory Setting: 1
02-16	Multi-function Output 3 (MO1)
02-17	Multi-function Output 4 (MO2)
02-36	Output terminal of I/O extension card (MO10) or (RA10)
02-37	Output terminal of I/O extension card (MO11) or (RA11)
02-38	Output terminal of I/O extension card (MO12) or (RA12)
02-39	Output terminal of I/O extension card (MO13) or (RA13)
02-40	Output terminal of I/O extension card (MO14) or (RA14)
02-41	Output terminal of I/O extension card (MO15) or (RA15)
02-42	Output terminal of I/O extension card (MO16)
02-43	Output terminal of I/O extension card (MO17)
02-44	Output terminal of I/O extension card (MO18)
02-45	Output terminal of I/O extension card (MO19)
02-46	Output terminal of the I/O extension card (MO20)
	Factory Setting: 0

Settings

0: No function

1: Operation Indication

2: Operation speed attained

3: Desired frequency attained 1 (Pr.02-22)

4: Desired frequency attained 2 (Pr.02-24)

5: Zero speed (Frequency command)

6: Zero speed, include STOP (Frequency command)

7: Over torque 1 (Pr.06-06~06-08)

8: Over torque 2 (Pr.06-09~06-11)

9: Drive is ready

10: Low voltage warning (LV) (Pr.06-00)

11: Malfunction indication

12: Mechanical brake release (Pr.02-32)

13: Overheat warning (Pr.06-15)

14: Software brake signal indication (Pr.07-00)

15: PID feedback error

16: Slip error (oSL)

17: Terminal count value attained (Pr.02-20; not return to 0)

18: Preliminary count value attained (Pr.02-19; returns to 0)

19: Base Block

20: Warning output

21: Over voltage warning

22: Over-current stall prevention warning
23: Over-voltage stall prevention warning
24: Operation mode indication
25: Forward command
26: Reverse command
27: Output when current >= Pr.02-33 (>= 02-33)
28: Output when current <=Pr.02-33 (<= 02-33)
29: Output when frequency >= Pr.02-34 (>= 02-34)
30: Output when frequency <= Pr.02-34 (<= 02-34)
31: Y-connection for the motor coil
32: △-connection for the motor coil
33: Zero speed (actual output frequency)
34: Zero speed include stop (actual output frequency)
35: Error output selection 1 (Pr.06-23)
36: Error output selection 2 (Pr.06-24)
37: Error output selection 3 (Pr.06-25)
38: Error output selection 4 (Pr.06-26)
39: Position attained (Pr.10-19)
40: Speed attained (including Stop)
41: Multi-position attained
42: Crane function
43: Actual motor speed slower than Pr.02-47
44: Low current output (Pr.06-71 to Pr.06-73)
45: UVW Output Electromagnetic valve On/Off Switch
46: Master dEb action output
47: Closed brake output
48: Reserved
49: Homing action complete
50: Output for CANopen control
51: As analog output control for InnerCOM
52: Output for RS485
53~64: Reserved
65: Output for CANopen and RS485
66: SO contact A (N.O.)
67: Analog input signal level achieved
68: SO contact B (N.C.)

- This parameter is used for setting the function of multi-function terminals.
- Pr.02-36~Pr.02-41 requires additional extension cards to display the parameters, the choices of optional cards are EMC-D42A and EMC-R6AA.
- The optional card EMC-D42A provides 2 output terminals and can be used with Pr.02-36~02-37.
- The optional card EMC-R6AA provides 6 output terminals and can be used with Pr.02-36~02-41.
- Summary of function settings (Take the normally open contact for example, ON: contact is closed, OFF: contact is open)

Settings	Functions	Descriptions
0	No Function	
1	Operation Indication	Active when the drive is not at STOP.
2	Master Frequency Attained	Active when the AC motor drive reaches the output frequency setting.
3	Desired Frequency Attained 1 (Pr.02-22)	Active when the desired frequency (Pr.02-22) is attained.
4	Desired Frequency Attained 2 (Pr.02-24)	Active when the desired frequency (Pr.02-24) is attained.
5	Zero Speed (frequency command)	Active when frequency command =0. (the drive should be at RUN mode)
6	Zero Speed with Stop (frequency command)	Active when frequency command =0 or stop.
7	Over Torque 1	Active when detecting over-torque. Refer to Pr.06-07 (over-torque detection level-OT1) and Pr.06-08 (over-torque detection time-OT1). Refer to Pr.06-06~06-08.
8	Over Torque 2	Active when detecting over-torque. Refer to Pr.06-10 (over-torque detection level-OT2) and Pr.06-11 (over-torque detection time-OT2). Refer to Pr.06-09~06-11.
9	Drive Ready	Active when the drive is ON and no abnormality detected.
10	Low voltage warn (Lv)	Active when the DC Bus voltage is too low. (refer to Pr.06-00 low voltage level)
11	Malfunction Indication	Active when fault occurs (except Lv stop).
12	Mechanical Brake Release (Pr.02-32)	When drive runs after Pr.02-32, it will be ON. This function should be used with DC brake and it is recommended to use contact “b” (N.C).
13	Overheat	Active when IGBT or heat sink overheats to prevent OH turn off the drive. (refer to Pr.06-15)
14	Software Brake Signal Indication	Active when the soft brake function is ON. (refer to Pr.07-00)
15	PID Feedback Error	Active when the feedback signal is abnormal.
16	Slip Error (oSL)	Active when the slip error is detected.
17	Terminal Count Value Attained (Pr.02-20; not return to 0)	Active when the counter reaches Terminal Counter Value (Pr.02-19). This contact won’t active when Pr.02-20>Pr.02-19.
18	Preliminary Counter Value Attained (Pr.02-19; returns to 0)	Active when the counter reaches Preliminary Counter Value (Pr.02-19).
19	External Base Block input (B.B.)	Active when the output of the AC motor drive is shut off during base block.
20	Warning Output	Active when the warning is detected.
21	Over-voltage Warning	Active when the over-voltage is detected.
22	Over-current Stall Prevention Warning	Active when the over-current stall prevention is detected.
23	Over-voltage Stall prevention Warning	Active when the over-voltage stall prevention is detected.
24	Operation Mode Indication	Active when the operation command is controlled by external terminal. (Pr.00-21≠0)
25	Forward Command	Active when the operation direction is forward.
26	Reverse Command	Active when the operation direction is reverse.
27	Output when Current >= Pr.02-33	Active when current is >= Pr.02-33.
28	Output when Current < Pr.02-33	Active when current is < Pr.02-33
29	Output when frequency >= Pr.02-34	Active when frequency is >= Pr.02-34.

<table>
<tr><th>Settings</th><th>Functions</th><th>Descriptions</th></tr>
<tr><td>30</td><td>Output when Frequency < Pr.02-34</td><td>Active when frequency is <Pr.02-34.</td></tr>
<tr><td>31</td><td>Y-connection for the Motor Coil</td><td>Active when PR.05-24=1, when frequency output is lower than Pr.05-23 minus 2Hz, continues longer than 05-25.</td></tr>
<tr><td>32</td><td>△-connection for the Motor Coil</td><td>Active when PR.05-24=1, when frequency output is higher than Pr.05-23 plus 2Hz, continues longer than 05-25.</td></tr>
<tr><td>33</td><td>Zero Speed (actual output frequency)</td><td>Active when the actual output frequency is 0. (the drive should be at RUN mode)</td></tr>
<tr><td>34</td><td>Zero Speed with Stop (actual output frequency)</td><td>Active when the actual output frequency is 0 or Stop.</td></tr>
<tr><td>35</td><td>Error Output Selection 1 (Pr.06-23)</td><td>Active when Pr.06-23 is ON.</td></tr>
<tr><td>36</td><td>Error Output Selection 2 (Pr.06-24)</td><td>Active when Pr.06-24 is ON.</td></tr>
<tr><td>37</td><td>Error Output Selection 3 (Pr.06-25)</td><td>Active when Pr.06-25 is ON.</td></tr>
<tr><td>38</td><td>Error Output Selection 4 (Pr.06-26)</td><td>Active when Pr.06-26 is ON.</td></tr>
<tr><td>39</td><td>Position Attained (Pr.10-19)</td><td>Active when the PG position control point reaches Pr.10-19.</td></tr>
<tr><td>40</td><td>Speed Attained (including zero speed)</td><td>Active when the output frequency reaches frequency setting or stop.</td></tr>
<tr><td>41</td><td>Multi-position Attained</td><td>User can set any three multi-function input terminals to 41. The current position action status of these three terminals will be outputted. Example: if setting Pr.02-36~02-38 to 41 and only the multi-position of the second point has been done. Therefore, current status is RA (ON), RA (OFF) and MO1 (OFF). In this way, their status is 010. Bit0 is RA and so on.
<table>
<tr><th></th><th>MO2
Pr.02-17=41</th><th>MO1
Pr.02-16=41</th><th>RY2
Pr.02-14=41</th><th>RY1
Pr.02-13=41</th></tr>
<tr><td>Pr.04-16</td><td>0</td><td>0</td><td>0</td><td>1</td></tr>
<tr><td>Pr.04-18</td><td>0</td><td>0</td><td>1</td><td>0</td></tr>
<tr><td>Pr.04-20</td><td>0</td><td>0</td><td>1</td><td>1</td></tr>
<tr><td>Pr.04-22</td><td>0</td><td>1</td><td>0</td><td>0</td></tr>
<tr><td>Pr.04-24</td><td>0</td><td>1</td><td>0</td><td>1</td></tr>
<tr><td>Pr.04-26</td><td>0</td><td>1</td><td>1</td><td>0</td></tr>
<tr><td>Pr.04-28</td><td>0</td><td>1</td><td>1</td><td>1</td></tr>
<tr><td>Pr.04-30</td><td>1</td><td>0</td><td>0</td><td>0</td></tr>
<tr><td>Pr.04-32</td><td>1</td><td>0</td><td>0</td><td>1</td></tr>
<tr><td>Pr.04-34</td><td>1</td><td>0</td><td>1</td><td>0</td></tr>
<tr><td>Pr.04-36</td><td>1</td><td>0</td><td>1</td><td>1</td></tr>
<tr><td>Pr.04-38</td><td>1</td><td>1</td><td>0</td><td>0</td></tr>
<tr><td>Pr.04-40</td><td>1</td><td>1</td><td>0</td><td>1</td></tr>
<tr><td>Pr.04-42</td><td>1</td><td>1</td><td>1</td><td>0</td></tr>
<tr><td>Pr.04-44</td><td>1</td><td>1</td><td>1</td><td>1</td></tr>
</table></td></tr>
<tr><td>42</td><td>Crane Function</td><td>This function should be used with Pr.02-32, Pr.02-33, Pr.02-34, Pr.02-57 and Pr.02-58.
Active when setting Pr.07-16=Pr.02-34 and Fcmd > Pr.02-34 and output current > Pr.02-33 and Time > Pr.02-32.
The example of the crane application is in the following for your reference.</td></tr>
<tr><td>43</td><td>Motor Zero-speed Output (Pr.02-47)</td><td>Active when motor actual speed is less than Pr.02-47.</td></tr>
<tr><td>44</td><td>Low Current Output</td><td>This function needs to be used with Pr.06-71 ~ Pr.06-73</td></tr>
</table>

Settings	Functions	Descriptions
45	UVW Phase Magnet Contractor ON/ OFF Switch	1. Under FOCPG control mode, set MI=49 (drive enable) and MO=45 (electromagnetic contractor ON/OFF switch), then the magnetic contactor will follow the drive status to be ON or OFF. 2. For brake control, set MO=12 (mechanical brake release), Pr.02-31=T1 sec (mechanical brake delay time); then enable/disable DC braking by set 07-01 (DC brake current) to any level except 0 and set Pr.07-02 = T2 (DC brake time at start up) and Pr.07-03 = T2 (DC brake current at stop). It is recommend to set T2 >T1 and try to activate brake control during zero-speed status. 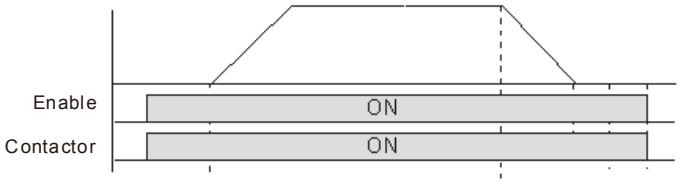 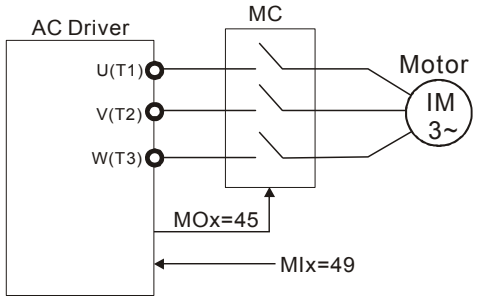
46	Master dEb signal output	When dEb arises at Master, MO will send a dEb signal to Slave. Then Slave will follow Master's command and decelerate to stop simultaneously.
47	Brake Release at Stop	When drive stops, the corresponding multi-function terminal will be ON if the frequency is less than Pr.02-34. After it is ON, it will be OFF when brake delay time exceeds Pr.02-32. 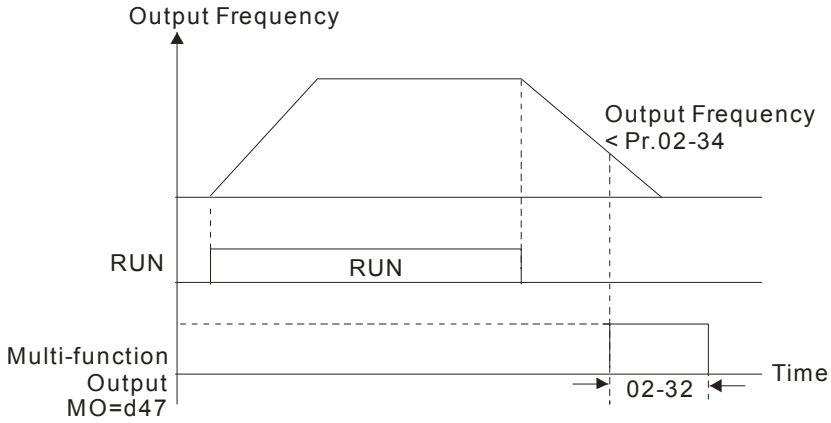
48	Reserved	
49	Homing Action Complete	Output when homing action complete.

<table>
<tr><th>Settings</th><th>Functions</th><th>Descriptions</th></tr>
<tr><td>50</td><td>Output for CANopen control</td><td>Control multi-function output terminals through CANopen.
To control RY2, set Pr02-14 = 50.
The mapping table of the CANopen DO is below:
<table>
<tr><th>physical terminal</th><th>Setting of related parameters</th><th>Attribute</th><th>Corresponding Index</th></tr>
<tr><td>RY1</td><td>P2-13 = 50</td><td>RW</td><td>The bit 0 at 2026-41</td></tr>
<tr><td>RY2</td><td>P2-14 = 50</td><td>RW</td><td>The bit 1 at 2026-41</td></tr>
<tr><td>MO1</td><td>P2-16 = 50</td><td>RW</td><td>The bit 3 at 2026-41</td></tr>
<tr><td>MO2</td><td>P2-17 = 50</td><td>RW</td><td>The bit 4 at 2026-41</td></tr>
<tr><td>MO10</td><td rowspan="2">P2-36 = 50</td><td rowspan="2">RW</td><td>The bit 5 at 2026-41</td></tr>
<tr><td>RY10</td><td>The bit 5 at 2026-41</td></tr>
<tr><td>MO11</td><td rowspan="2">P2-37 = 50</td><td rowspan="2">RW</td><td>The bit 6 at 2026-41</td></tr>
<tr><td>RY11</td><td>The bit 6 at 2026-41</td></tr>
<tr><td>RY12</td><td>P2-38 = 50</td><td>RW</td><td>The bit 7 at 2026-41</td></tr>
<tr><td>RY13</td><td>P2-39 = 50</td><td>RW</td><td>The bit 8 at 2026-41</td></tr>
<tr><td>RY14</td><td>P2-40 = 50</td><td>RW</td><td>The bit 9 at 2026-41</td></tr>
<tr><td>RY15</td><td>P2-41= 50</td><td>RW</td><td>The bit 10 at 2026-41</td></tr>
</table>
Refer to Chapter 15-3-5 for more information.</td></tr>
<tr><td>51</td><td>Output for RS-485</td><td>Control multi-function output terminals through Delta InnerCom (on RS485 communication)
<table>
<tr><th>Physical terminal</th><th>Setting of related parameters</th><th>Attribute</th><th>Corresponding Address</th></tr>
<tr><td>RY1</td><td>P2-13 = 51</td><td>RW</td><td>The bit 0 at 2640</td></tr>
<tr><td>RY2</td><td>P2-14 = 51</td><td>RW</td><td>The bit 1 at 2640</td></tr>
<tr><td>MO1</td><td>P2-16 = 51</td><td>RW</td><td>The bit 3 at 2640</td></tr>
<tr><td>MO2</td><td>P2-17 = 51</td><td>RW</td><td>The bit 4 at 2640</td></tr>
<tr><td>MO10</td><td rowspan="2">P2-36=51</td><td rowspan="2">RW</td><td>The bit 5 at 2640</td></tr>
<tr><td>RY10</td><td>The bit 5 at 2640</td></tr>
<tr><td>MO11</td><td rowspan="2">P2-37 = 51</td><td rowspan="2">RW</td><td>The bit 6 at 2640</td></tr>
<tr><td>RY11</td><td>The bit 6 at 2640</td></tr>
<tr><td>RY12</td><td>P2-38 = 51</td><td>RW</td><td>The bit 7 at 2640</td></tr>
<tr><td>RY13</td><td>P2-39 = 51</td><td>RW</td><td>The bit 8 at 2640</td></tr>
<tr><td>RY14</td><td>P2-40 = 51</td><td>RW</td><td>The bit 9 at 2640</td></tr>
<tr><td>RY15</td><td>P2-41= 51</td><td>RW</td><td>The bit 10 at 2640</td></tr>
</table></td></tr>
</table>

<table>
<tr><th>Settings</th><th>Functions</th><th>Descriptions</th></tr>
<tr><td>52</td><td>Output for communication card</td><td>For communication output of communication cards (CMC-MOD01, CMC-EIP01, CMC-PN01 and CMC-DN01)
<table>
<tr><th>Physical terminal</th><th>Setting of related parameters</th><th>Attribute</th><th>Corresponding Address</th></tr>
<tr><td>RY1</td><td>P2-13 = 52</td><td>RW</td><td>The bit 0 at 2640</td></tr>
<tr><td>RY2</td><td>P2-14 = 52</td><td>RW</td><td>The bit 1 at 2640</td></tr>
<tr><td>MO1</td><td>P2-16 = 52</td><td>RW</td><td>The bit 3 at 2640</td></tr>
<tr><td>MO2</td><td>P2-17 = 52</td><td>RW</td><td>The bit 4 at 2640</td></tr>
<tr><td>MO10</td><td rowspan="2">P2-36=52</td><td rowspan="2">RW</td><td>The bit 5 at 2640</td></tr>
<tr><td>RY10</td><td>The bit 5 at 2640</td></tr>
<tr><td>MO11</td><td rowspan="2">P2-37 = 52</td><td rowspan="2">RW</td><td>The bit 6 at 2640</td></tr>
<tr><td>RY11</td><td>The bit 6 at 2640</td></tr>
<tr><td>RY12</td><td>P2-38 = 52</td><td>RW</td><td>The bit 7 at 2640</td></tr>
<tr><td>RY13</td><td>P2-39 = 52</td><td>RW</td><td>The bit 8 at 2640</td></tr>
<tr><td>RY14</td><td>P2-40 = 52</td><td>RW</td><td>The bit 9 at 2640</td></tr>
<tr><td>RY15</td><td>P2-41= 52</td><td>RW</td><td>The bit 10 at 2640</td></tr>
</table></td></tr>
<tr><td>53~64</td><td colspan="2">Reserved</td></tr>
<tr><td>65</td><td>Output for CANopen and RS485</td><td>To be control output of CANopen & RS485.</td></tr>
<tr><td>66</td><td>SO contact A (N.O.)</td><td rowspan="2">
<table>
<tr><th rowspan="2">Status of drive</th><th colspan="2">Status of safety output</th></tr>
<tr><th>N.O. (MO=66)</th><th>N.C. (MO=68)</th></tr>
<tr><td>Normal</td><td>Broken circuit (Open)</td><td>Short circuit (Close)</td></tr>
<tr><td>STO</td><td>Short circuit (Close)</td><td>Broken circuit (Open)</td></tr>
<tr><td>STL1~STL3</td><td>Short circuit (Close)</td><td>Broken circuit (Open)</td></tr>
</table></td></tr>
<tr><td>68</td><td>SO contact B (N.C.)</td></tr>
<tr><td>67</td><td>Analog input signal level achieved</td><td>Multi-function output terminals operate when analog input signal level is between high level and low level.
03-44: Select the analog signal channel, AVI, ACI, and AUI which is going to be compared.
03-45: The high level of analog input, factory setting is 50%.
03-46: The low level of analog input, factory setting is 10%.
If analog input > 03-45, then multi-function output terminal operates.
If analog input < 03-46, then multi-function output terminal stops outputting.</td></tr>
</table>

Example: Crane Application

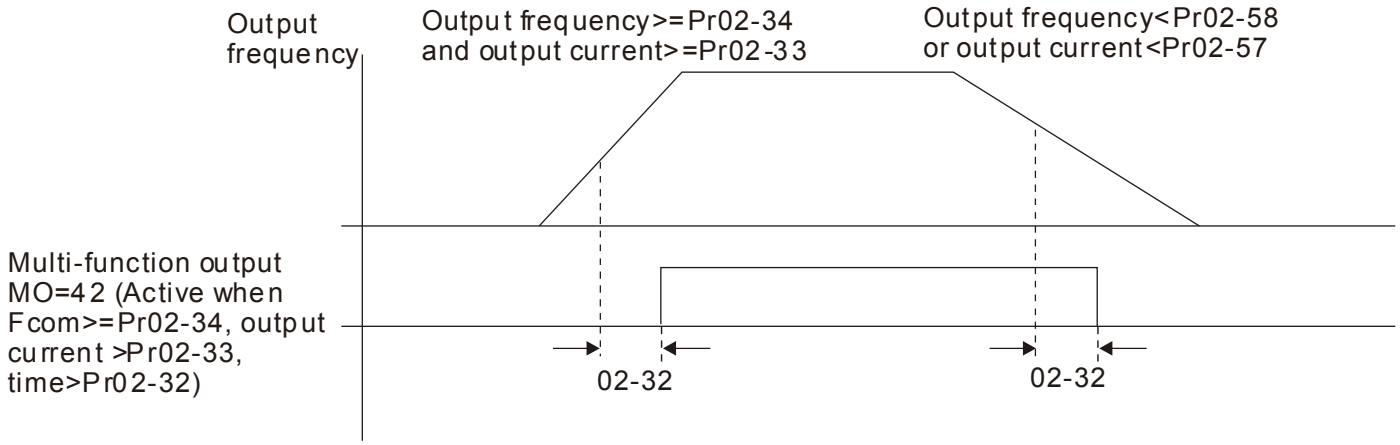

It is recommended to be used with Dwell function as shown in the following:

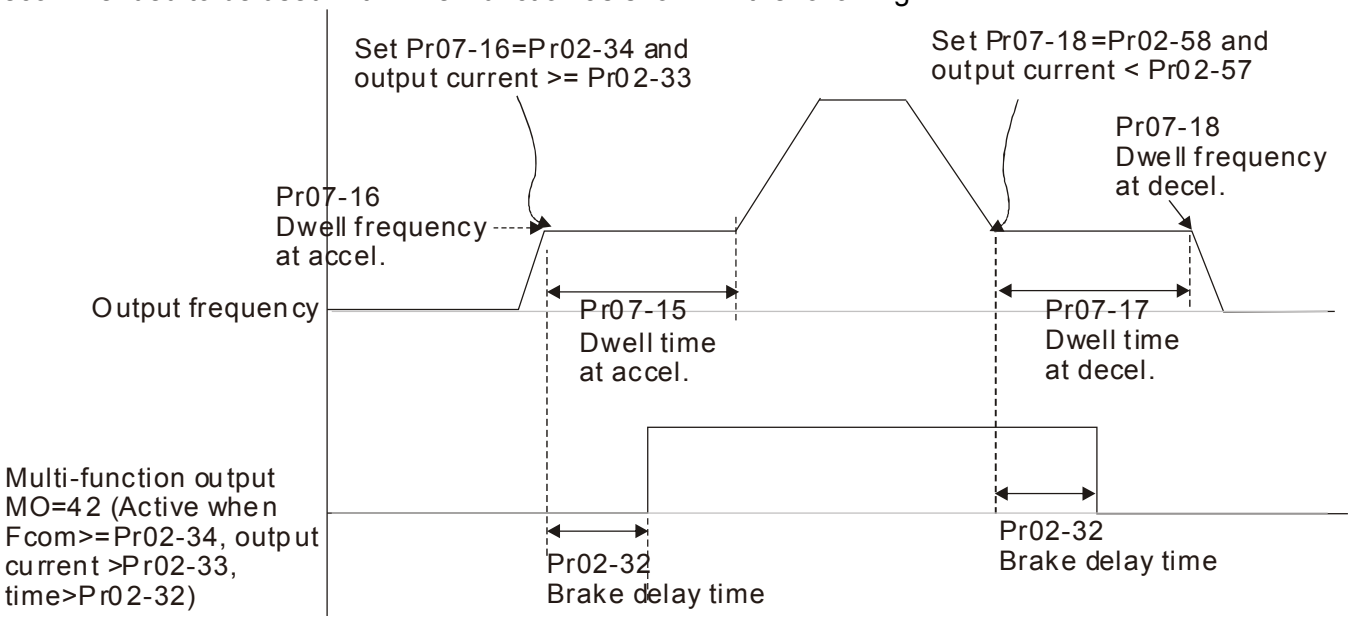

02-18 Multi-function Output Setting

Factory Setting: 0000

Settings 0000h~FFFFh (0:N.O. ; 1:N.C.)

- The setting of this parameter is in hexadecimal.
- This parameter is set via bit setting. If a bit is 1, the corresponding multi-function output acts in the opposite way.

  Example:

  If Pr02-13=1 and Pr02-18=0, Relay 1 is ON when the drive runs and is open when the drive is stopped.

  If Pr02-13=1 and Pr02-18=1, Relay 1 is open when the drive runs and is closed when the drive is stopped.

Bit setting

bit15	bit14	bit13	bit12	bit11	bit10	bit9	bit8	bit7	bit6	bit5	bit4	bit3	bit2	bit1	bit0
MO20	MO19	MO18	MO17	MO16	MO15	MO14	MO13	MO12	MO11	MO10	MO2	MO1	Reserved	RY2	RY1

02-19 Terminal Counting Value Attained (return to 0)

Factory Setting: 0

Settings 0~65500

- The counter trigger can be set by the multi-function terminal MI6 (set Pr.02-06 to 23). Upon completion of counting, the specified multi-function output terminal will be activated (Pr.02-13~02-14, Pr.02-36, 02-37 is set to 18). Pr.02-19 can't be set to 0.
- When the display shows c5555, the drive has counted 5,555 times. If display shows c5555•, it means that real counter value is between 55,550 to 55,559.

02-20 Preliminary Counting Value Attained (not return to 0)

Factory Setting: 0

Settings 0~65500

- When the counter value counts from 1 and reaches this value, the corresponding multi-function output terminal will be activated, provided one of Pr. 02-13, 02-14, 02-36, 02-37 set to 17 (Preliminary Count Value Setting). This parameter can be used for the end of the counting to make the drive runs from the low speed to stop.

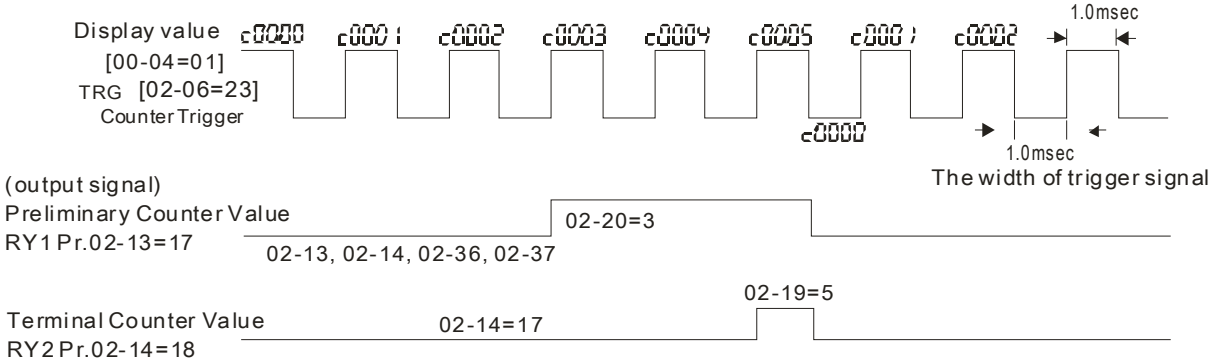

02-21 Digital Output Gain（DFM）

Factory Setting: 1

Settings 1~166

- It is used to set the signal for the digital output terminals (DFM-DCM) and digital frequency output (pulse X work period=50%). Output pulse per second = output frequency X Pr.02-21.

02-22 Desired Frequency Attained 1

Factory Setting: 60.00/50.00

Settings 0.00~599.00Hz

02-23 The Width of the Desired Frequency Attained 1

Factory Setting: 2.00

Settings 0.00~599.00Hz

02-24 Desired Frequency Attained 2

Factory Setting: 60.00/50.00

Settings 0.00~599.00Hz

02-25 The Width of the Desired Frequency Attained 2

Factory Setting: 2.00

Settings 0.00~599.00Hz

Once output frequency reaches desired frequency and the corresponding multi-function output terminal is set to 3 or 4 (Pr.02-13, 02-14, 02-36, and 02-37), this multi-function output terminal will be ON.

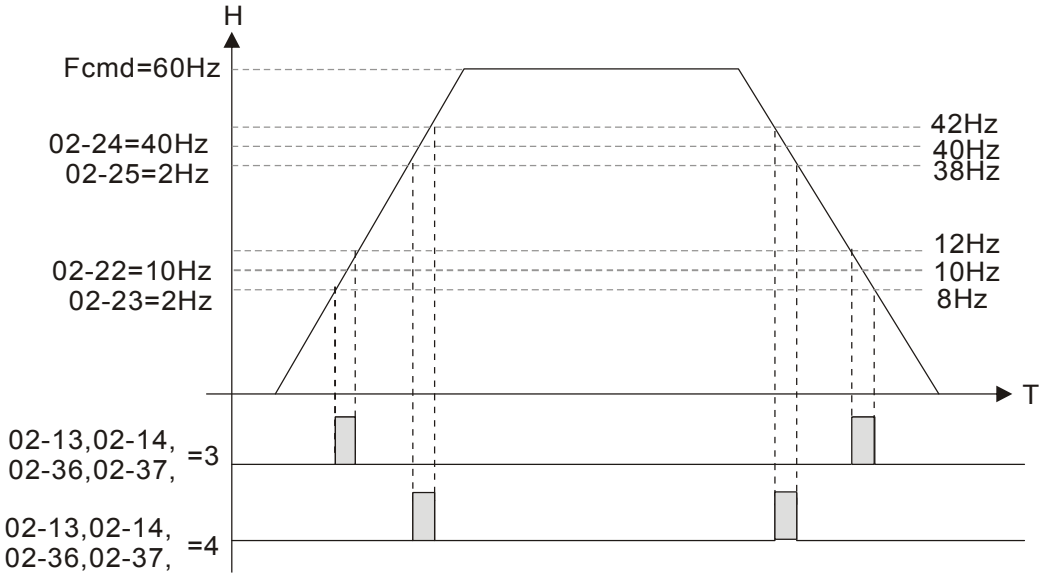

02-32 Brake Delay Time

Factory Setting: 0.000

Settings 0.000~65.000 sec

When the AC motor drive runs after Pr.02-32 delay time, the corresponding multi-function output terminal (12: mechanical brake release) will be ON. It has to use this function with DC brake.

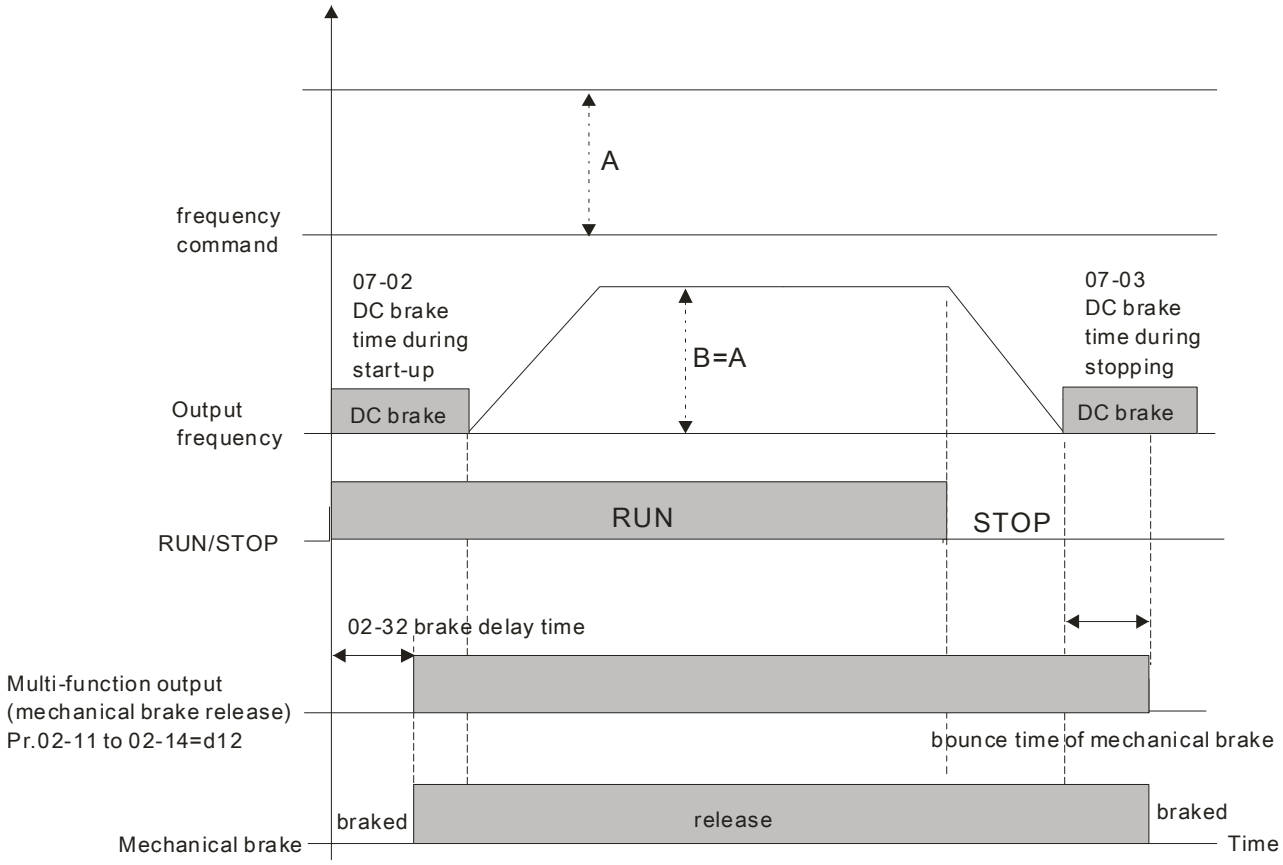

If this parameter is used without DC brake, it will be invalid. Refer to the following operation timing.

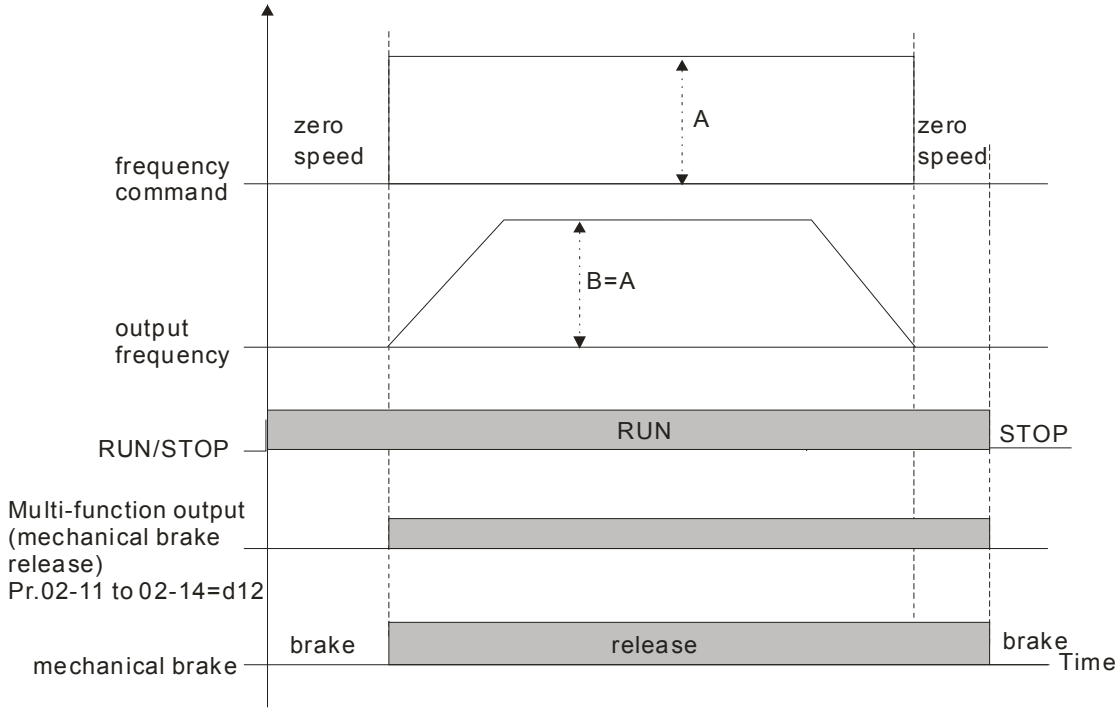

02-33 Output Current Level Setting for Multi-function Output Terminals

Factory Setting: 0

Settings 0~100%

When output current is higher or equal to Pr.02-33, it will activate multi-function output terminal (Pr.02-13, 02-14, 02-16, and 02-17 is set to 27).

When output current is lower or equal to Pr.02-33, it will activate multi-function output terminal (Pr.02-13, 02-14, 02-16, and 02-17 is set to 28).

02-34 Output Boundary for Multi-function Output Terminals

Factory Setting: 3.00

Settings 0.00~599.00Hz

When output frequency is higher or equal to Pr.02-34, it will activate the multi-function terminal (Pr.02-13, 02-14, 02-16, 02-17 is set to 29).

When output frequency is lower or equal to Pr.02-34, it will activate the multi-function terminal (Pr.02-13, 02-14, 02-16, 02-17 is set to 30).

02-35 External Operation Control Selection after Reset and Activate

Factory Setting: 0

Settings 0: Disable

1: Drive runs if the run command still exists after reset or re-boots.

Setting 1:

Status 1: After the drive is powered on and the external terminal for RUN keeps ON, the drive will run.

Status 2: After clearing fault once a fault is detected and the external terminal for RUN keeps ON, the drive can run after pressing RESET key.

02-47 Zero-speed Level of Motor

Factory Setting: 0

Settings 0~65535 rpm

This parameter should be used with the multi-function output terminals (set to 43). It needs to be used with PG cared and motor with encoder feedback.

This parameter is used to set the level of motor zero-speed. When the actual speed is lower than this setting, the corresponding multi-function output terminal 43 will be ON as shown as follows.

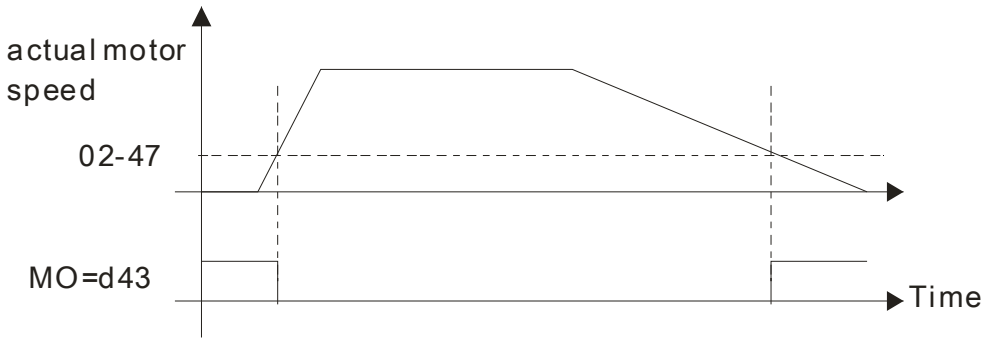

02-48 Max. Frequency of Resolution Switch

Factory Setting: 60.00

Settings 0.00~599.00Hz

02-49 Switch the delay time of Max. output frequency

Factory Setting: 0

Settings 0~65000 ms

It is used to improve the unstable speed or unstable position due to the insufficient of analog resolution. It needs to be used with external terminal (set to 43). After setting this parameter, it needs to adjust the analog output resolution of controller simultaneously by this setting.

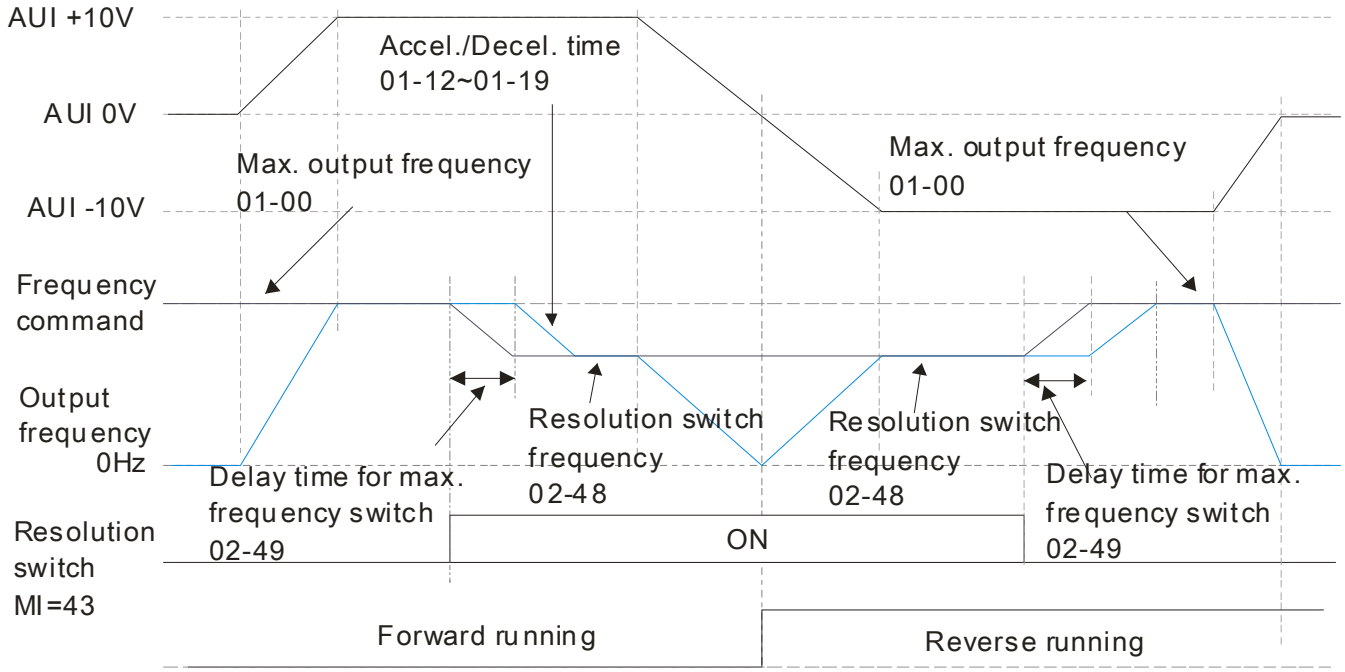

02-50 Display the Status of Multi-function Input Terminal

Factory Setting: Read only

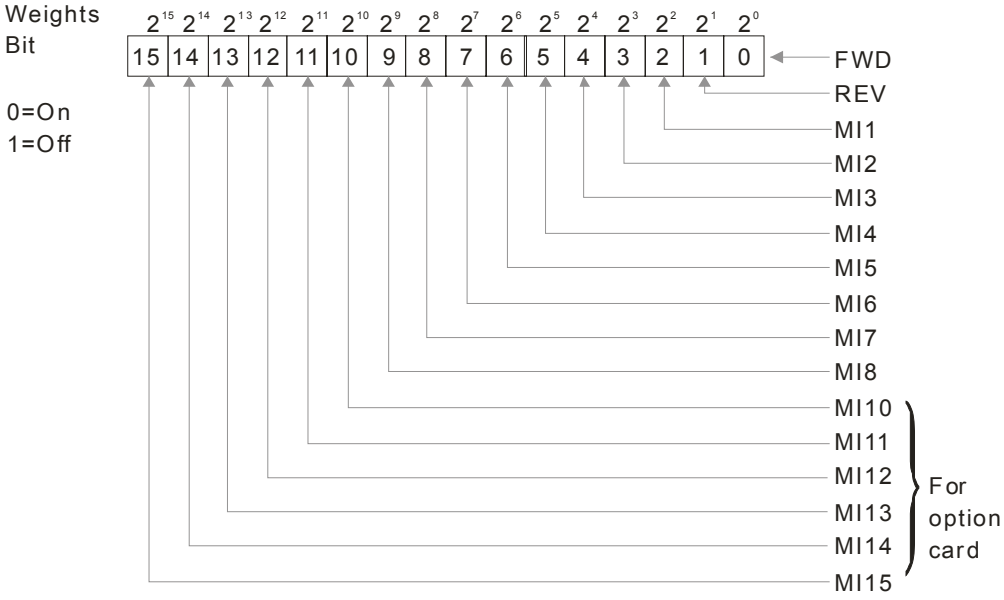

For Example:

If Pr.02-50 displays 0034h (Hex), i.e. the value is 52, and 110100 (binary). It means MI1, MI3 and MI4 are active.

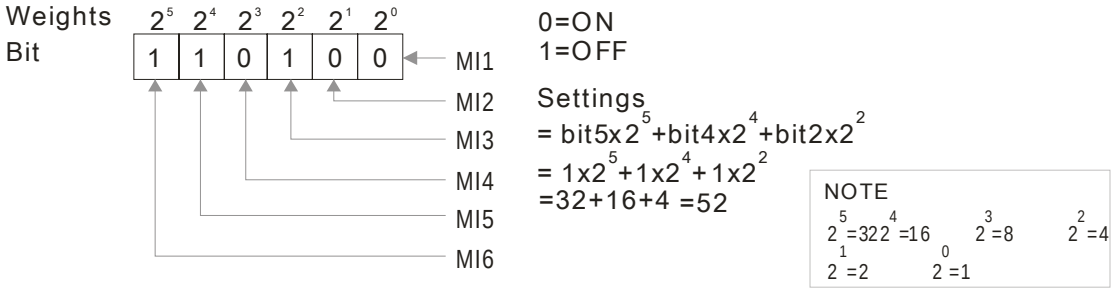

02-51 Status of Multi-function Output Terminal

Factory Setting: Read only

For Example:

If Pr.02-51 displays 000Bh (Hex), i.e. the value is 11, and 1011 (binary). It means RY1, RY2 and MO1 are ON.

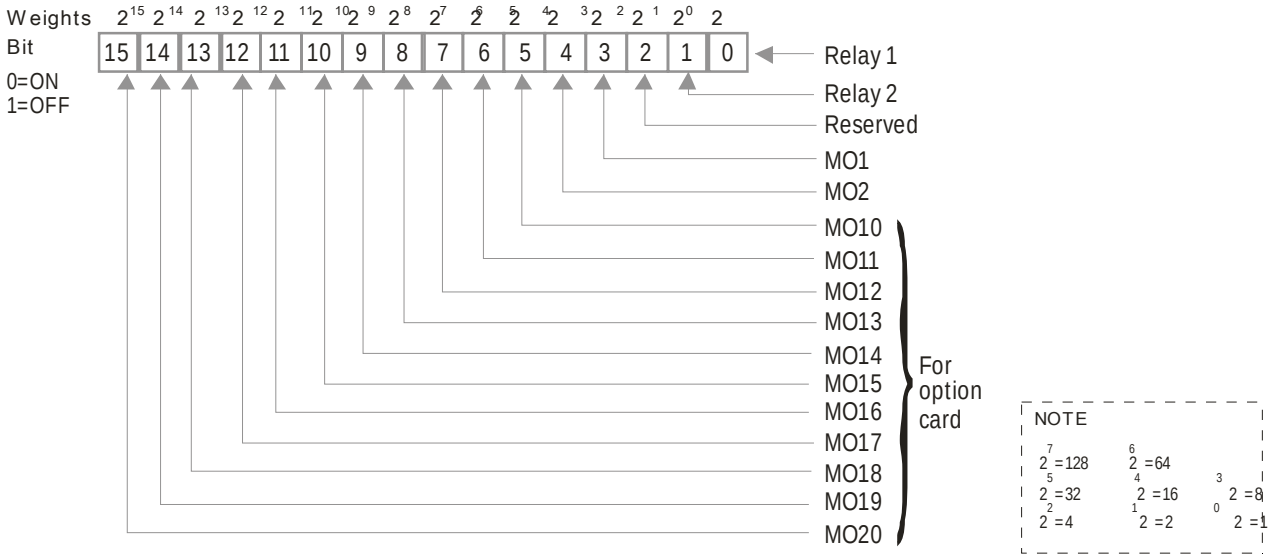

02-52 Display External Output terminal occupied by PLC

Factory Setting: Read only

P.02-52 shows the external multi-function input terminal that used by PLC.

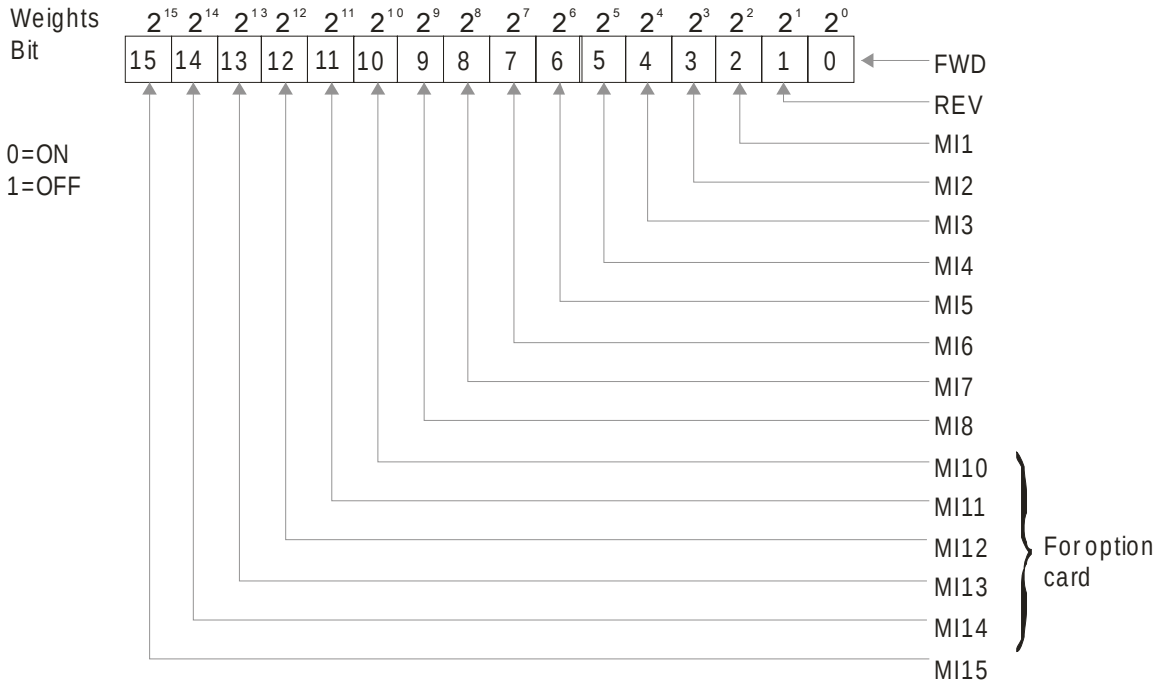

For Example:

When Pr.02-52 displays 0034h(hex) and switching to 110100 (binary), it means MI1, MI3 and MI4 are used by PLC.

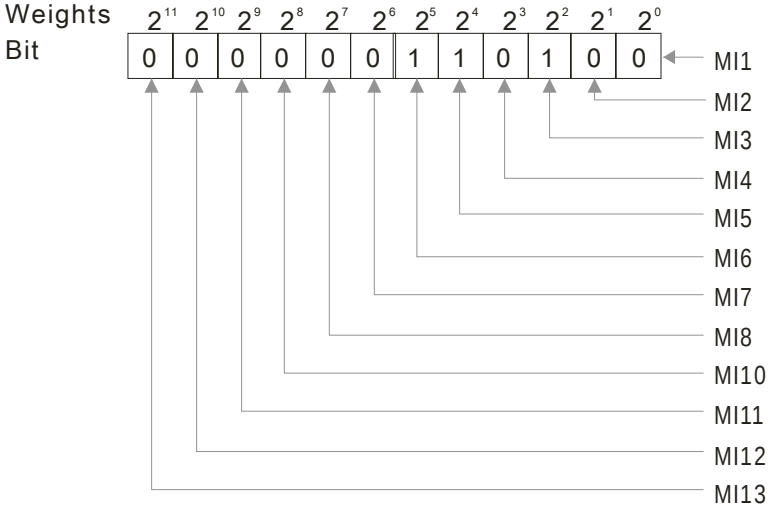

0: not used by PLC
1: used by PLC

Displays
$= bit5 \times 2^5 + bit4 \times 2^4 + bit2 \times 2^2$
$= 1 \times 2^5 + 1 \times 2^4 + 1 \times 2^2$
$= 32+16+4 = 52$

NOTE
$2^{14}=16384$ $2^{13}=8192$ $2^{12}=4096$
$2^{11}=2048$ $2^{10}=1024$ $2^{9}=512$
$2^{8}=256$ $2^{7}=128$ $2^{6}=64$
$2^{5}=32$ $2^{4}=16$ $2^{3}=8$ $2^{2}=4$
$2^{1}=2$ $2^{0}=1$

02-53 Display External Multi-function Output Terminal occupied by PLC

Factory Setting: Read only

P.02-53 shows the external multi-function output terminal that used by PLC.

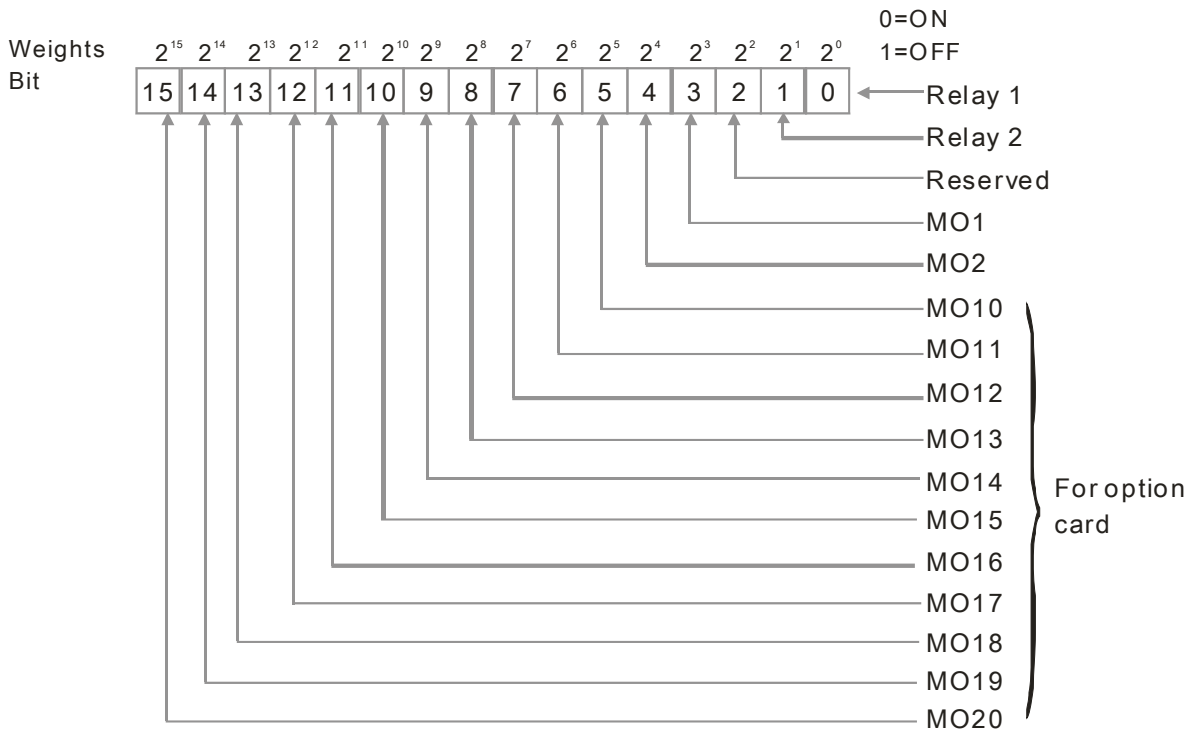

NOTE

2^{7}=128 2^{6}=64

2^{5}=32 2^{4}=16 2^{3}=8

2^{2}=4 2^{1}=2 2^{0}=1

For Example:

If the value of Pr.02-53 displays 0003h (Hex), it means RY1and RY2 are used by PLC.

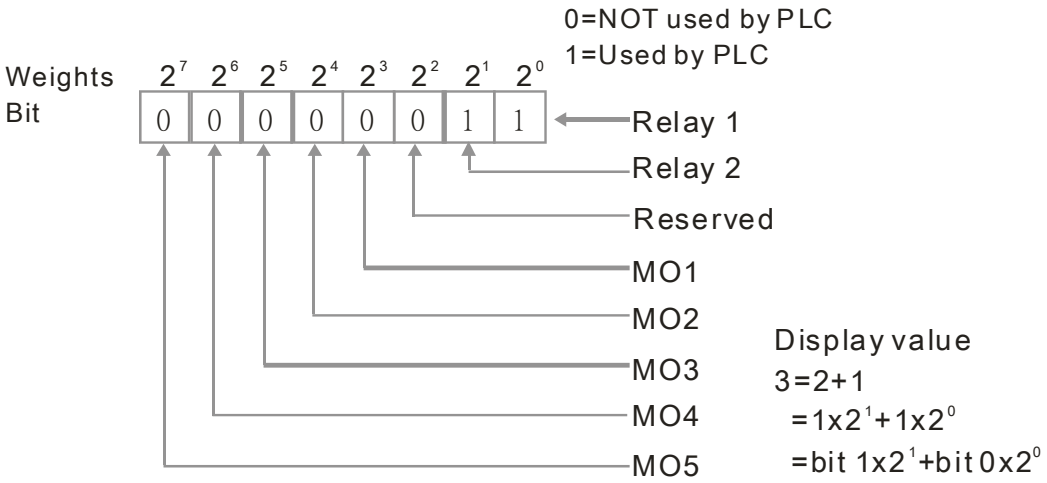

02-54 Display the Frequency Command Executed by External Terminal

Factory Setting: Read only

Settings 0.01~599.00Hz (Read only)

When the source of frequency command comes from the external terminal, if Lv or Fault occurs at this time, the frequency command of the external terminal will be saved in this parameter.

02-55 Reserved

02-56 Release Brake Check

Factory Setting: 0.000

Settings 0.000~65.000 sec.

The parameter needs to be used with MI=55. This is to be set for the time difference of mechanical brake delay time and actual brake operation.

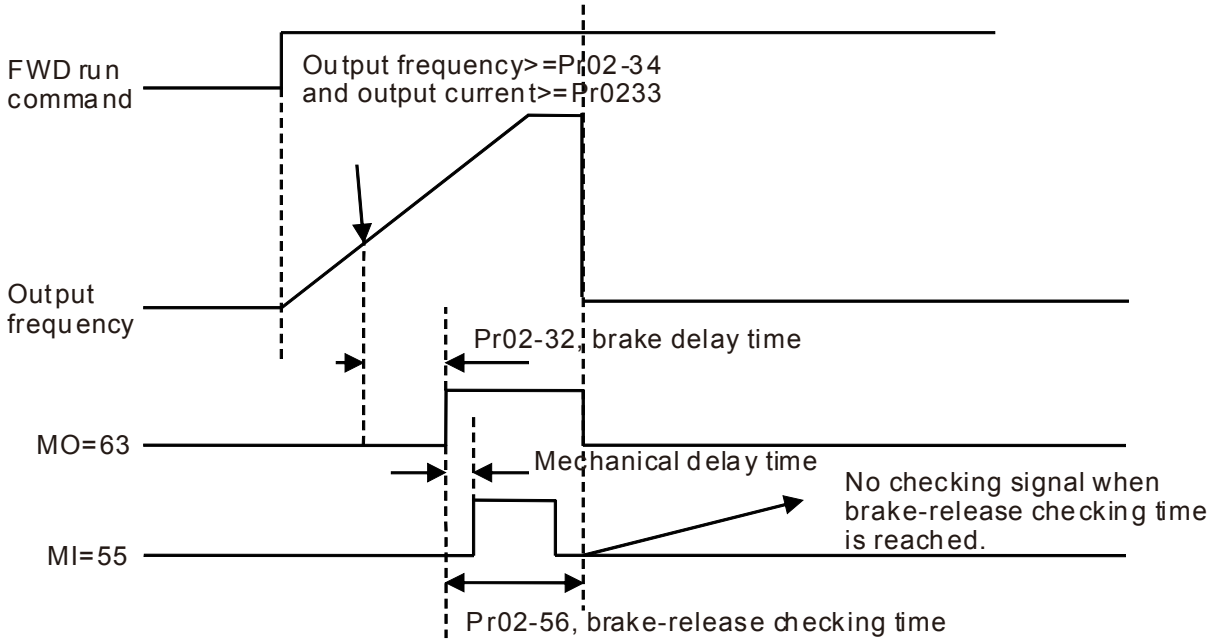

02-57 Multi-function output terminal: Function 42: Brake Current Checking Point

Factory setting: 0

Settings 0~100%

02-58 Multi-function output terminal: Function 42: Brake Frequency Checking Point

Factory setting: 0.00

Settings 0.00~3.00Hz

Pr02-32, Pr02-33, Pr02-34, Pr02-57 and Pr02-58 can be applied on setting up cranes. (Choose crane action #42 to set up multi-function output Pr02-13, Pr02-14, Pr02-16, and Pr02-17)

When output current of a drive is higher than the setting of Pr02-33 Pivot Point of the Current (>=02-33) and when output frequency is higher than the setting of Pr02-34 Pivot Point of the Frequency (>= 02-34), choose #42 to set up Multi-function output Pr02-13, Pr02-14, Pr02-16 and Pr002-17 after the delay time set at Pr02-32.

When the Pivot Point of the Current 's setting 02-57≠0 and when the output current of the drive is lower than the setting of Pr02-57 (<02-57), or when the output frequency is lower than the setting of Pr02-58 (<02-58), the disable the setting #42 of the multi-function output Pr02-13, Pr02-14, Pr02-16, Pr02-17

When Pr02-57 = 0, the output current is lower than setting of Pr02-33 Pivot Point of the current (<02-33) or when output frequency is lower than the setting of Pr02-58(<02-58), disable the setting of #42 of the multi-function output Pr02-13, Pr02-14, Pr02-16, Pr02-17.

02-70 IO Card Type

Factory setting: Read only

Settings Read only

0: No IO Card
1: EMC-BPS01 Card
2: No IO Card
3: No IO Card
4: EMC-D611A Card
5: EMC-D42A Card
6: EMC-R6AA Card
7: No IO Card

03 Analog Input/Output Parameter

✓ This parameter can be set during operation.

✓ **03-00** Analog Input Selection (AVI)

Factory Setting: 1

✓ **03-01** Analog Input Selection (ACI)

Factory Setting: 0

✓ **03-02** Analog Input Selection (AUI)

Factory Setting: 0

Settings
0: No function
1: Frequency command (speed limit under torque control mode)
2: Torque command (torque limit under speed mode)
3: Torque offset command
4: PID target value
5: PID feedback signal
6: PTC thermistor input value
7: Positive torque limit
8: Negative torque limit
9: Regenerative torque limit
10: Positive/negative torque limit
11: PT100 thermistor input value
12: Reserved
13: PID compensation value
14~20: Reserved

📖 When use analog input as PID reference value, Pr00-20 must set 2(analog input).
Setting method 1: Pr03-00~03-02 set 1 as PID reference input
Setting method 2: Pr03-00~03-02 set 4 as PID reference input
If the setting value 1 and set value 4 existed at the same time, AVI input has highest priority to become PID reference input.

📖 When use analog input as PID compensation value, Pr08-16 must set 1(Source of PID compensation is analog input). The compensation value can be observed via Pr08-17.

📖 When it is frequency command or TQC speed limit, the corresponding value for 0~±10V/4~20mA is 0 – max. output frequency(Pr.01-00)

📖 When it is torque command or torque limit, the corresponding value for 0~±10V/4~20mA is 0 – max. output torque (Pr.11-27).

📖 When it is torque compensation, the corresponding value for 0~±10V/4~20mA is 0 – rated torque.

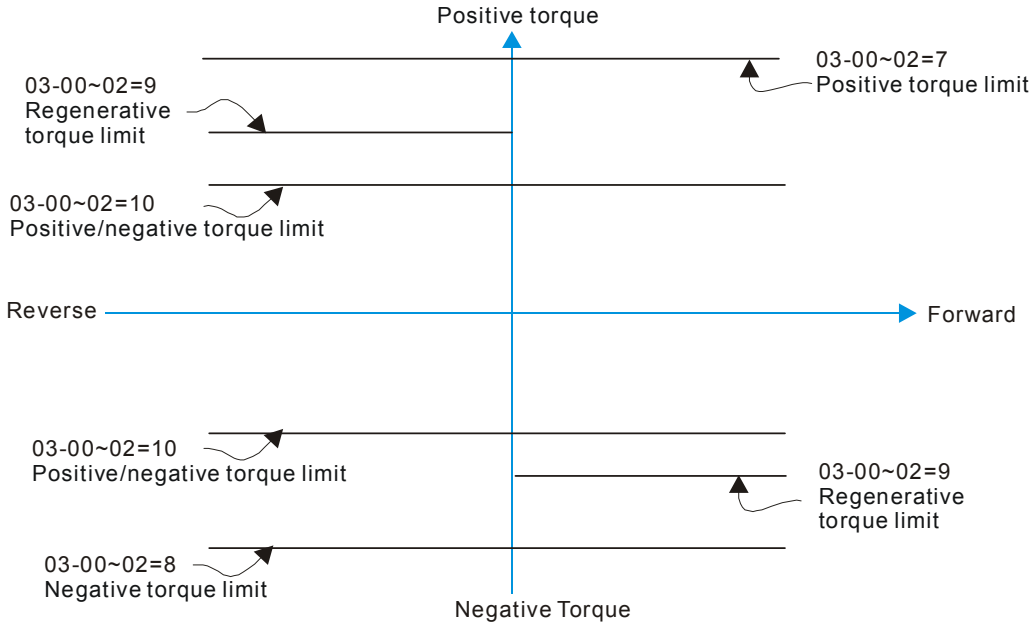

When Pr.03-00~Pr.03-02 have the same setting, then the AVI will be the prioritized selection.

03-03 Analog Input Bias (AVI)

Factory Setting: 0

Settings -100.0~100.0%

It is used to set the corresponding AVI voltage of the external analog input 0.

03-04 Analog Input Bias (ACI)

Factory Setting: 0

Settings -100.0~100.0%

It is used to set the corresponding ACI voltage of the external analog input 0.

03-05 Analog Voltage Input Bias (AUI)

Factory Setting: 0

Settings -100.0~100.0%

It is used to set the corresponding AUI voltage of the external analog input 0.

The relation between external input voltage/current and setting frequency: 0~10V (4-20mA) corresponds to 0~Pr01-00 (max. operation frequency).

03-06 Reserved

03-07 Positive/negative Bias Mode (AVI)
03-08 Positive/negative Bias Mode (ACI)
03-09 Positive/negative Bias Mode (AUI)

Factory Setting: 0

Settings 0: Zero bias
1: Lower than or equal to bias
2: Greater than or equal toe bias
3: The absolute value of the bias voltage while serving as the center
4: Serve bias as the center

In a noisy environment, it is advantageous to use negative bias to provide a noise margin. It is recommended NOT to use less than 1V to set the operation frequency.

In the diagram below: Black line: Curve with no bias. Gray line: curve with bias

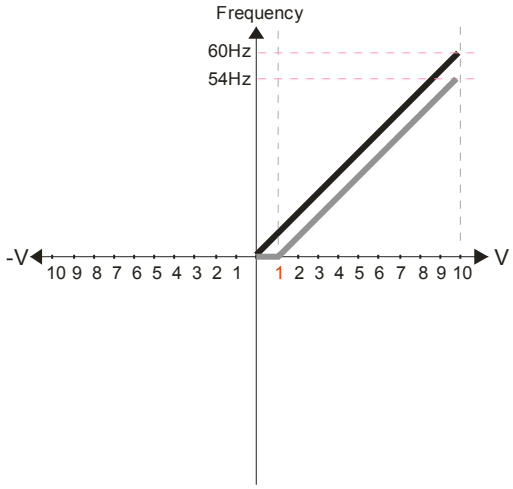

Pr.03-03=10%

Pr.03-07~03-09 (Positive/Negative Bias Mode)

0: No bias
1: Lower than or equal to bias
2: Greater than or equal to bias
3: The absolute value of the bias voltage while serving as the center
4: Serve bias as the center

Pr.03-10 (Analog Frequency Command for Reverse Run)

0: Negative frequency is not valid. Forward and reverse run is controlled by digital keypad or external terminal.
1: Neagtive frequency is valid. Positive frequency = forward run; negative frequency = reverse run. Direction can not be switched by digital keypad or external teriminal control.

Pr.03-11 Analog Input Gain (AVI)= 100%

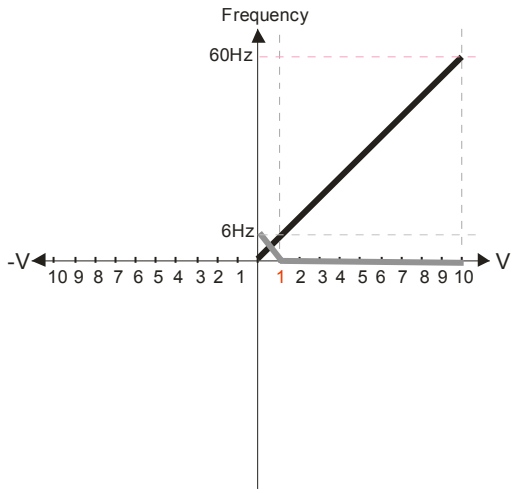

Pr.03-03=10%

Pr.03-07~03-09 (Positive/Negative Bias Mode)

0: No bias
1: Lower than or equal to bias
2: Greater than or equal to bias
3: The absolute value of the bias voltage while serving as the center
4: Serve bias as the center

Pr.03-10 (Analog Frequency Command for Reverse Run)

0: Negative frequency is not valid. Forward and reverse run is controlled by digital keypad or external terminal.
1: Neagtive frequency is valid. Positive frequency = forward run; negative frequency = reverse run. Direction can not be switched by digital keypad or external teriminal control.

Pr.03-11Analog Input Gain (AVI)=100%

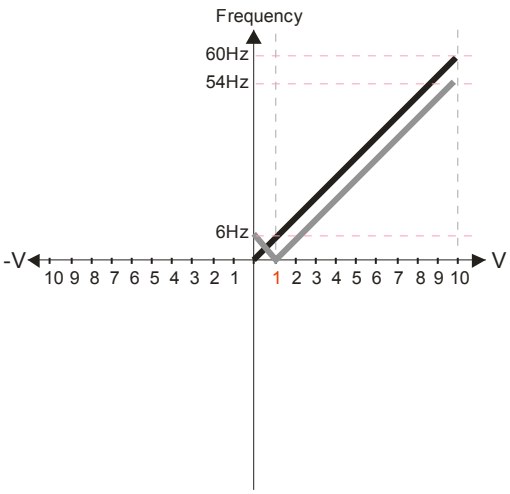

Pr.03-03=10%

Pr.03-07~03-09 (Positive/Negative Bias Mode)

0: No bias
1: Lower than or equal to bias
2: Greater than or equal to bias
3: The absolute value of the bias voltage while serving as the center
4: Serve bias as the center

Pr.03-10 (Analog Frequency Command for Reverse Run)

0: Negative frequency is not valid. Forward and reverse run is controlled by digital keypad or external terminal.
1: Neagtive frequency is valid. Positive frequency = forward run; negative frequency = reverse run. Direction can not be switched by digital keypad or external teriminal control.

Pr.03-11 Analog Input Gain (AVI) = 100%

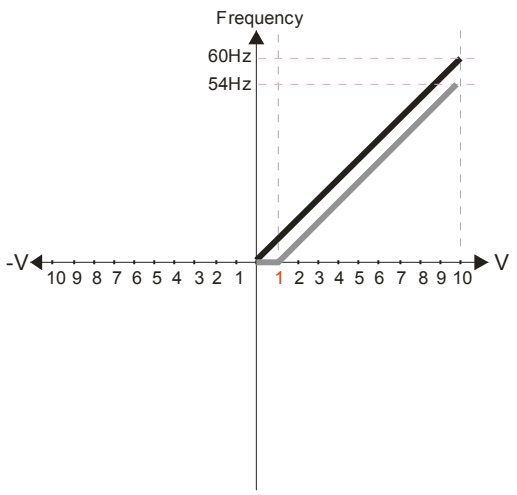

Pr.03-03=10%

Pr.03-07~03-09 (Positive/Negative Bias Mode)

0: No bias
1: Lower than or equal to bias
2: Greater than or equal to bias
3: The absolute value of the bias voltage while serving as the center
4: Serve bias as the center

Pr.03-10 (Analog Frequency Command for Reverse Run)

0: Negative frequency is not valid. Forward and reverse run is controlled by digital keypad or external terminal.
1: Neagtive frequency is valid. Positive frequency = forward run; negative frequency = reverse run. Direction can not be switched by digital keypad or external teriminal control.

Pr.03-11 Analog Input Gain (AVI) = 100%

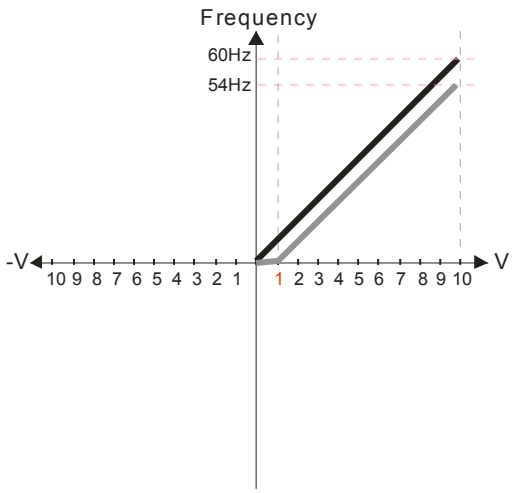

Pr.03-03=10%

Pr.03-07~03-09 (Positive/Negative Bias Mode)

0: No bias
1: Lower than or equal to bias
2: Greater than or equal to bias
3: The absolute value of the bias voltage while serving as the center
4: Serve bias as the center

Pr.03-10 (Analog Frequency Command for Reverse Run)

0: Negative frequency is not valid. Forward and reverse run is controlled by digital keypad or external terminal.
1: Neagtive frequency is valid. Positive frequency = forward run; negative frequency = reverse run. Direction can not be switched by digital keypad or external teriminal control.

Pr.03-11 Analog Input Gain (AVI)= 100%

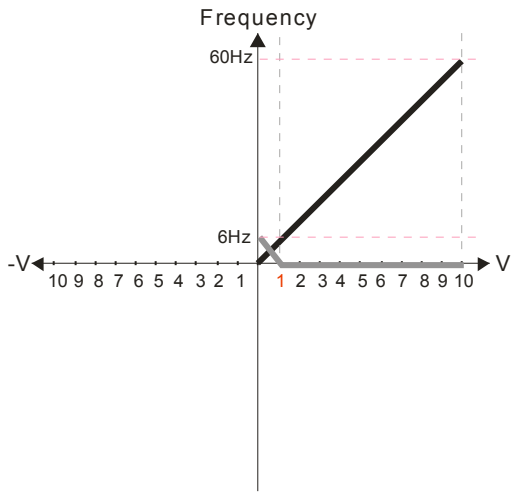

Pr.03-03=10%

Pr.03-07~03-09 (Positive/Negative Bias Mode)

0: No bias
1: Lower than or equal to bias
2: Greater than or equal to bias
3: The absolute value of the bias voltage while serving as the center
4: Serve bias as the center

Pr.03-10 (Analog Frequency Command for Reverse Run)

0: Negative frequency is not valid. Forward and reverse run is controlled by digital keypad or external terminal.
1: Neagtive frequency is valid. Positive frequency = forward run; negative frequency = reverse run. Direction can not be switched by digital keypad or external teriminal control.

Pr.03-11Analog Input Gain (AVI)= 100%

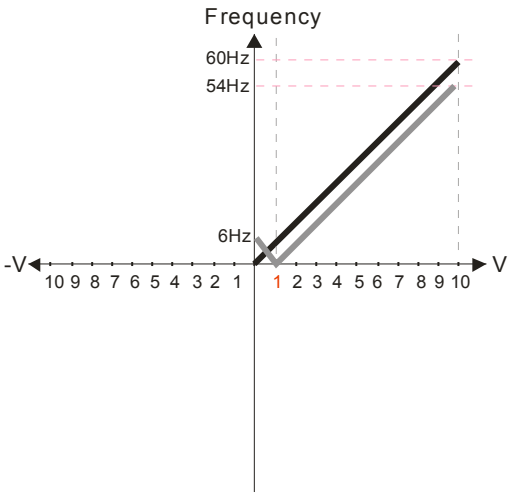

Pr.03-03=10%

Pr.03-07~03-09 (Positive/Negative Bias Mode)

0: No bias
1: Lower than or equal to bias
2: Greater than or equal to bias
3: The absolute value of the bias voltage while serving as the center
4: Serve bias as the center

Pr.03-10 (Analog Frequency Command for Reverse Run)

0: Negative frequency is not valid. Forward and reverse run is controlled by digital keypad or external terminal.
1: Neagtive frequency is valid. Positive frequency = forward run; negative frequency = reverse run. Direction can not be switched by digital keypad or external teriminal control.

Pr.03-11 Analog Input Gain (AVI) = 100%

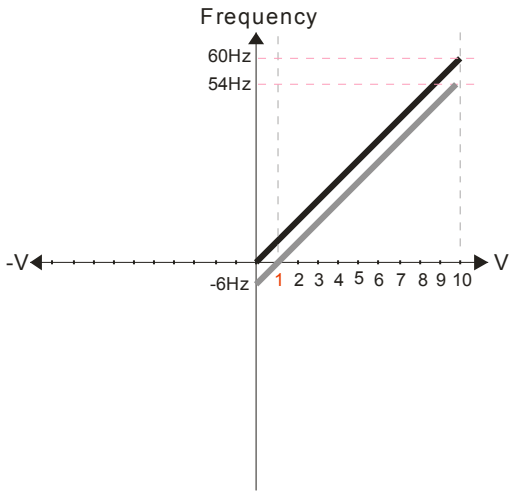

Pr.03-03=10%

Pr.03-07~03-09 (Positive/Negative Bias Mode)

0: No bias
1: Lower than or equal to bias
2: Greater than or equal to bias
3: The absolute value of the bias voltage while serving as the center
4: Serve bias as the center

Pr.03-10 (Analog Frequency Command for Reverse Run)

0: Negative frequency is not valid. Forward and reverse run is controlled by digital keypad or external terminal.
1: Neagtive frequency is valid. Positive frequency = forward run; negative frequency = reverse run. Direction can not be switched by digital keypad or external teriminal control.

Pr.03-11 Analog Input Gain (AVI) = 100%

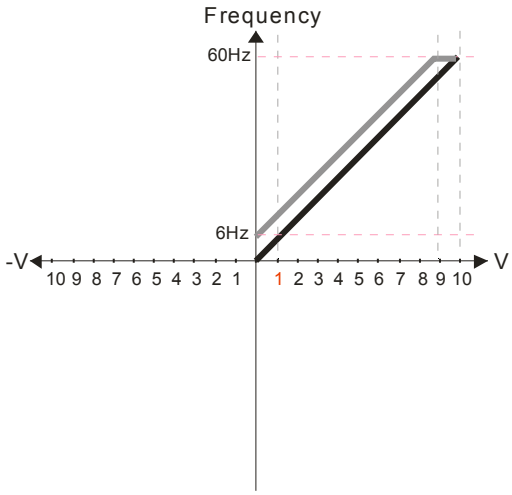

Pr.03-03=-10%

Pr.03-07~03-09 (Positive/Negative Bias Mode)

0: No bias
1: Lower than or equal to bias
2: Greater than or equal to bias
3: The absolute value of the bias voltage while serving as the center
4: Serve bias as the center

Pr.03-10 (Analog Frequency Command for Reverse Run)

0: Negative frequency is not valid. Forward and reverse run is controlled by digital keypad or external terminal.
1: Neagtive frequency is valid. Positive frequency = forward run; negative frequency = reverse run. Direction can not be switched by digital keypad or external teriminal control.

Pr.03-11 Analog Input Gain (AVI)= 100%

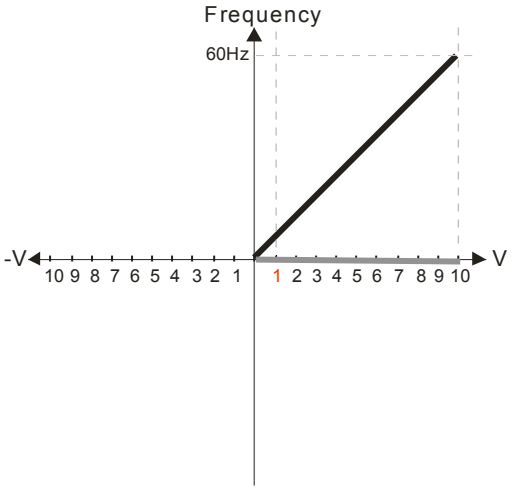

Pr.03-03=-10%

Pr.03-07~03-09 (Positive/Negative Bias Mode)

0: No bias
1: Lower than or equal to bias
2: Greater than or equal to bias
3: The absolute value of the bias voltage while serving as the center
4: Serve bias as the center

Pr.03-10 (Analog Frequency Command for Reverse Run)

0: Negative frequency is not valid. Forward and reverse run is controlled by digital keypad or external terminal.
1: Neagtive frequency is valid. Positive frequency = forward run; negative frequency = reverse run. Direction can not be switched by digital keypad or external teriminal control.

Pr.03-11 Analog Input Gain (AVI)= 100%

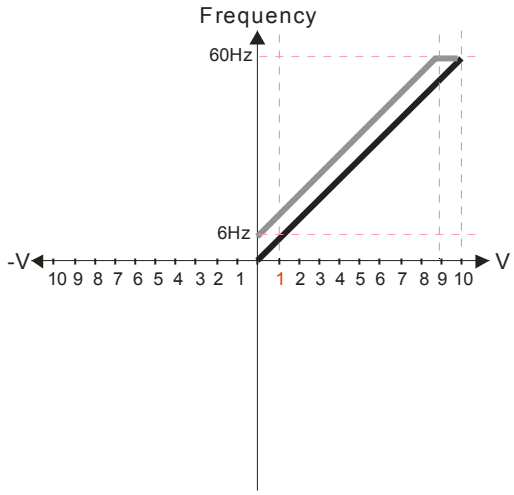

Pr.03-03=-10%

Pr.03-07~03-09 (Positive/Negative Bias Mode)

0: No bias
1: Lower than or equal to bias
2: Greater than or equal to bias
3: The absolute value of the bias voltage while serving as the center
4: Serve bias as the center

Pr.03-10 (Analog Frequency Command for Reverse Run)

0: Negative frequency is not valid. Forward and reverse run is controlled by digital keypad or external terminal.
1: Neagtive frequency is valid. Positive frequency = forward run; negative frequency = reverse run. Direction can not be switched by digital keypad or external teriminal control.

Pr.03-11 Analog Input Gain (AVI) = 100%

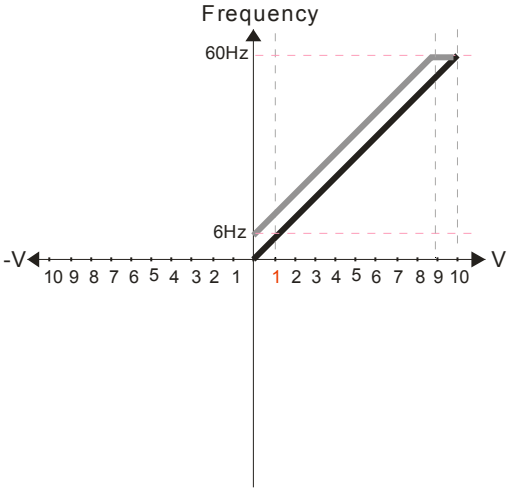

Pr.03-03=-10%

Pr.03-07~03-09 (Positive/Negative Bias Mode)

0: No bias
1: Lower than or equal to bias
2: Greater than or equal to bias
3: The absolute value of the bias voltage while serving as the center
4: Serve bias as the center

Pr.03-10 (Analog Frequency Command for Reverse Run)

0: Negative frequency is not valid. Forward and reverse run is controlled by digital keypad or external terminal.
1: Neagtive frequency is valid. Positive frequency = forward run; negative frequency = reverse run. Direction can not be switched by digital keypad or external teriminal control.

Pr.03-11 Analog Input Gain (AVI) = 100%

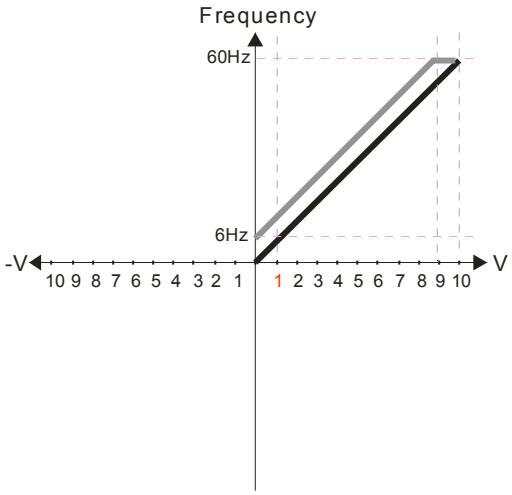

Pr.03-03=-10%

Pr.03-07~03-09 (Positive/Negative Bias Mode)

0: No bias
1: Lower than or equal to bias
2: Greater than or equal to bias
3: The absolute value of the bias voltage while serving as the center
4: Serve bias as the center

Pr.03-10 (Analog Frequency Command for Reverse Run)

0: Negative frequency is not valid. Forward and reverse run is controlled by digital keypad or external terminal.
1: Neagtive frequency is valid. Positive frequency = forward run; negative frequency = reverse run. Direction can not be switched by digital keypad or external teriminal control.

Pr.03-11 Analog Input Gain (AVI)= 100%

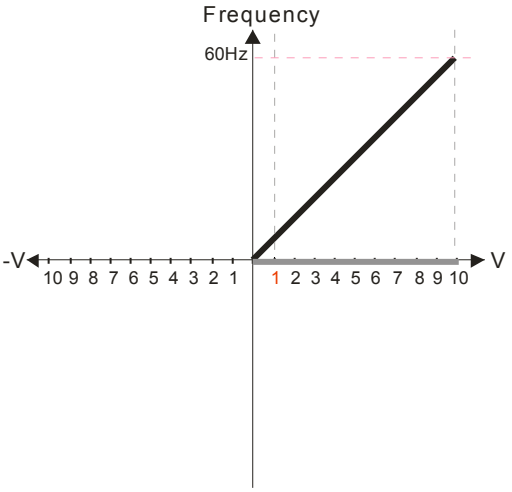

Pr.03-03=-10%

Pr.03-07~03-09 (Positive/Negative Bias Mode)

0: No bias
1: Lower than or equal to bias
2: Greater than or equal to bias
3: The absolute value of the bias voltage while serving as the center
4: Serve bias as the center

Pr.03-10 (Analog Frequency Command for Reverse Run)

0: Negative frequency is not valid. Forward and reverse run is controlled by digital keypad or external terminal.
1: Neagtive frequency is valid. Positive frequency = forward run; negative frequency = reverse run. Direction can not be switched by digital keypad or external teriminal control.

Pr.03-11 Analog Input Gain (AVI)= 100%

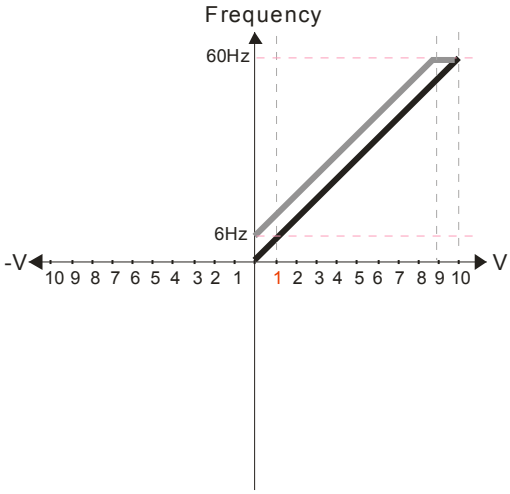

Pr.03-03=-10%

Pr.03-07~03-09 (Positive/Negative Bias Mode)

0: No bias
1: Lower than or equal to bias
2: Greater than or equal to bias
3: The absolute value of the bias voltage while serving as the center
4: Serve bias as the center

Pr.03-10 (Analog Frequency Command for Reverse Run)

0: Negative frequency is not valid. Forward and reverse run is controlled by digital keypad or external terminal.
1: Neagtive frequency is valid. Positive frequency = forward run; negative frequency = reverse run. Direction can not be switched by digital keypad or external teriminal control.

Pr.03-11 Analog Input Gain (AVI) = 100%

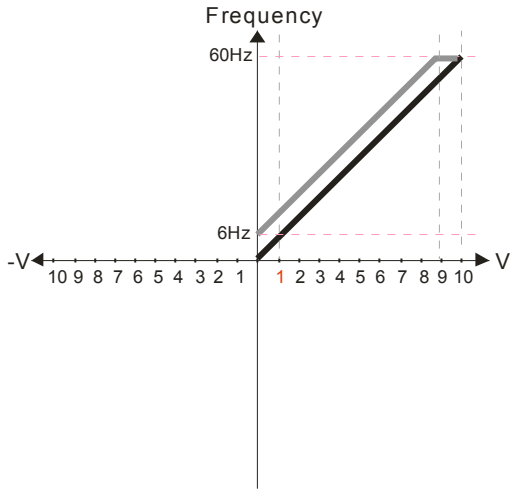

Pr.03-03=-10%

Pr.03-07~03-09 (Positive/Negative Bias Mode)

0: No bias
1: Lower than or equal to bias
2: Greater than or equal to bias
3: The absolute value of the bias voltage while serving as the center
4: Serve bias as the center

Pr.03-10 (Analog Frequency Command for Reverse Run)

0: Negative frequency is not valid. Forward and reverse run is controlled by digital keypad or external terminal.
1: Neagtive frequency is valid. Positive frequency = forward run; negative frequency = reverse run. Direction can not be switched by digital keypad or external teriminal control.

Pr.03-11 Analog Input Gain (AVI) = 100%

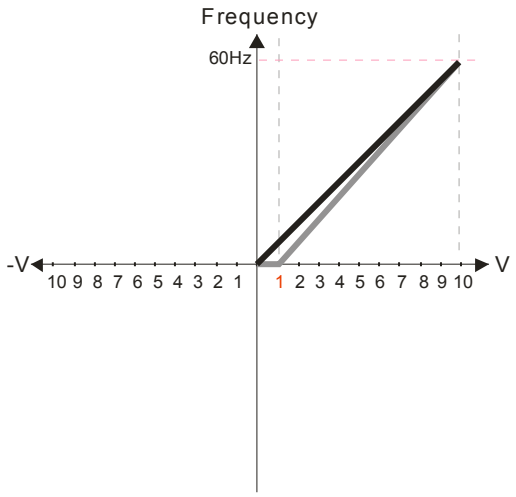

Pr.03-03=-10%

Pr.03-07~03-09 (Positive/Negative Bias Mode)

0: No bias
1: Lower than or equal to bias
2: Greater than or equal to bias
3: The absolute value of the bias voltage while serving as the center
4: Serve bias as the center

Pr.03-10 (Analog Frequency Command for Reverse Run)

0: Negative frequency is not valid. Forward and reverse run is controlled by digital keypad or external terminal.
1: Neagtive frequency is valid. Positive frequency = forward run; negative frequency = reverse run. Direction can not be switched by digital keypad or external teriminal control.

Pr.03-11 Analog Input Gain (AVI)= 1 11.1%

10/9=111.1%

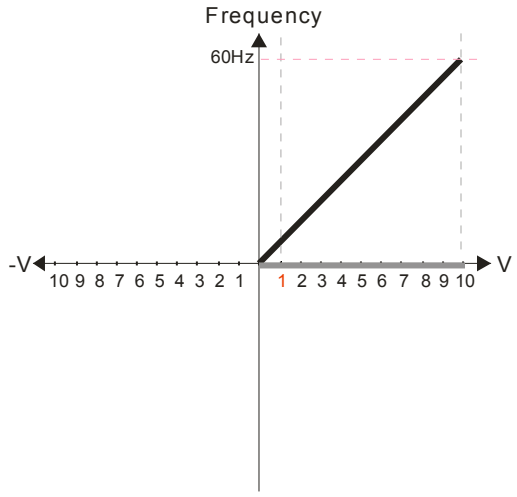

Pr.03-03=10%

Pr.03-07~03-09 (Positive/Negative Bias Mode)

0: No bias
1: Lower than or equal to bias
2: Greater than or equal to bias
3: The absolute value of the bias voltage while serving as the center
4: Serve bias as the center

Pr.03-10 (Analog Frequency Command for Reverse Run)

0: Negative frequency is not valid. Forward and reverse run is controlled by digital keypad or external terminal.
1: Neagtive frequency is valid. Positive frequency = forward run; negative frequency = reverse run. Direction can not be switched by digital keypad or external teriminal control.

Pr.03-11Analog Input Gain (AVI)=111.1%

10/9 =111.1%

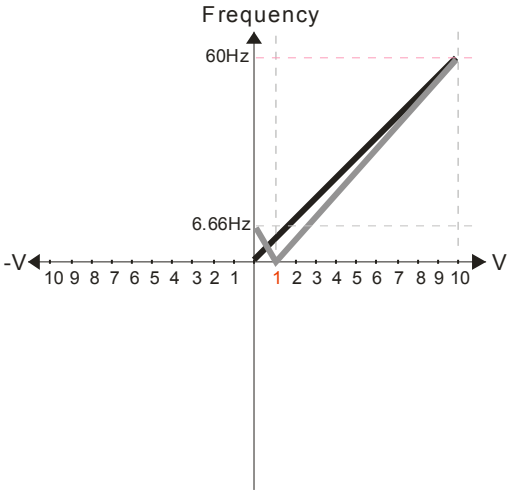

Pr.03-03=10%

Pr.03-07~03-09 (Positive/Negative Bias Mode)

0: No bias
1: Lower than or equal to bias
2: Greater than or equal to bias
3: The absolute value of the bias voltage while serving as the center
4: Serve bias as the center

Pr.03-10 (Analog Frequency Command for Reverse Run)

0: Negative frequency is not valid. Forward and reverse run is controlled by digital keypad or external terminal.
1: Neagtive frequency is valid. Positive frequency = forward run; negative frequency = reverse run. Direction can not be switched by digital keypad or external teriminal control.

Pr.03-11 Analog Input Gain (AVI) = 111.1%
10/9 =111.1%

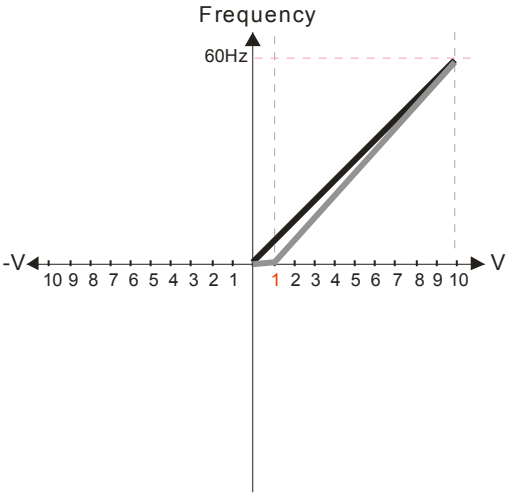

Pr.03-03=10%

Pr.03-07~03-09 (Positive/Negative Bias Mode)

0: No bias
1: Lower than or equal to bias
2: Greater than or equal to bias
3: The absolute value of the bias voltage while serving as the center
4: Serve bias as the center

Pr.03-10 (Analog Frequency Command for Reverse Run)

0: Negative frequency is not valid. Forward and reverse run is controlled by digital keypad or external terminal.
1: Neagtive frequency is valid. Positive frequency = forward run; negative frequency = reverse run. Direction can not be switched by digital keypad or external teriminal control.

Pr.03-11 Analog Input Gain (AVI) = 111.1%
10/9 =111.1%

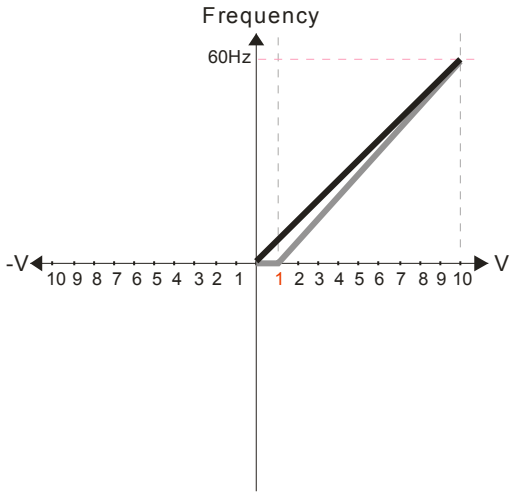

Pr.03-03=10%

Pr.03-07~03-09 (Positive/Negative Bias Mode)

0: No bias
1: Lower than or equal to bias
2: Greater than or equal to bias
3: The absolute value of the bias voltage while serving as the center
4: Serve bias as the center

Pr.03-10 (Analog Frequency Command for Reverse Run)

0: Negative frequency is not valid. Forward and reverse run is controlled by digital keypad or external terminal.
1: Neagtive frequency is valid. Positive frequency = forward run; negative frequency = reverse run. Direction can not be switched by digital keypad or external teriminal control.

Pr03-11 Analog Input Gain (AVI) = 111.1%
10/9 =111.1%

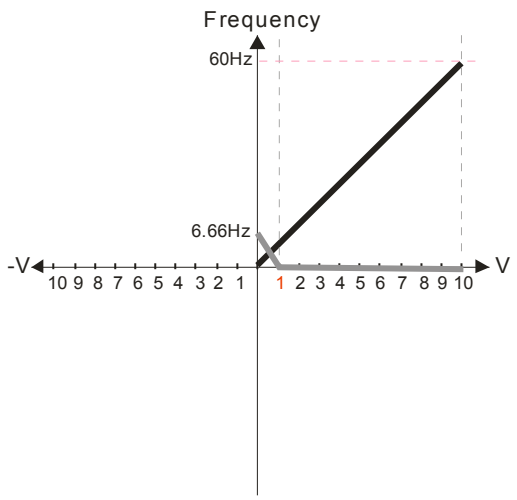

Pr.03-03=10%

Pr.03-07~03-09 (Positive/Negative Bias Mode)
0: No bias
1: Lower than or equal to bias
2: Greater than or equal to bias
3: The absolute value of the bias voltage while serving as the center
4: Serve bias as the center

Pr.03-10 (Analog Frequency Command for Reverse Run)
0: Negative frequency is not valid. Forward and reverse run is controlled by digital keypad or external terminal.
1: Neagtive frequency is valid. Positive frequency = forward run; negative frequency = reverse run. Direction can not be switched by digital keypad or external teriminal control.

Pr03-11Analog Input Gain (AVI) = 111.1%
10/9 =111.1%

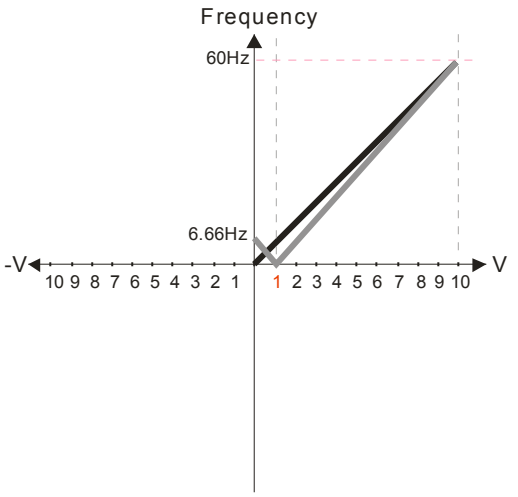

Pr.03-03=10%

Pr.03-07~03-09 (Positive/Negative Bias Mode)
0: No bias
1: Lower than or equal to bias
2: Greater than or equal to bias
3: The absolute value of the bias voltage while serving as the center
4: Serve bias as the center

Pr.03-10 (Analog Frequency Command for Reverse Run)
0: Negative frequency is not valid. Forward and reverse run is controlled by digital keypad or external terminal.
1: Neagtive frequency is valid. Positive frequency = forward run; negative frequency = reverse run. Direction can not be switched by digital keypad or external teriminal control.

Pr03-11 Analog Input Gain (AVI) = 111.1%
10/9 =111.1%

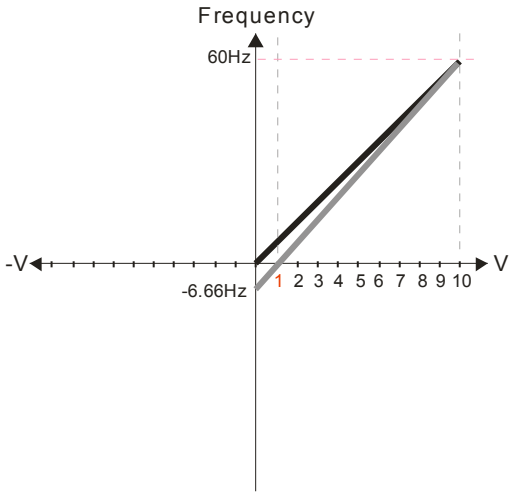

Pr.03-03=10%

Pr.03-07~03-09 (Positive/Negative Bias Mode)
0: No bias
1: Lower than or equal to bias
2: Greater than or equal to bias
3: The absolute value of the bias voltage while serving as the center
4: Serve bias as the center

Pr.03-10 (Analog Frequency Command for Reverse Run)
0: Negative frequency is not valid. Forward and reverse run is controlled by digital keypad or external terminal.
1: Neagtive frequency is valid. Positive frequency = forward run; negative frequency = reverse run. Direction can not be switched by digital keypad or external teriminal control.

Pr03-11 Analog Input Gain (AVI) = 100%
10/9 =111.1%

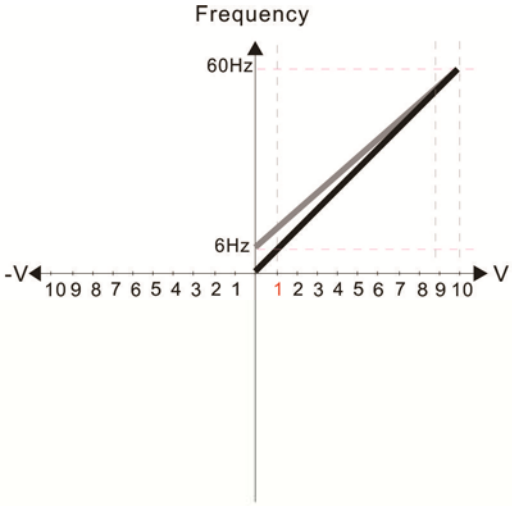

Pr.03-07~03-09 (Positive/Negative Bias Mode)

0: No bias
1: Lower than or equal to bias
2: Greater than or equal to bias
3: The absolute value of the bias voltage while serving as the center
4: Serve bias as the center

Pr.03-10 (Analog Frequency Command for Reverse Run)

0: Negative frequency is not valid. Forward and reverse run is controlled by digital keypad or external terminal.
1: Negative frequency is valid. Positive frequency = forward run; negative frequency = reverse run. Direction can not be switched by digital keypad or external terminal control.

Calculate the bias:

$\frac{60\text{-}6Hz}{10V} = \frac{6\text{-}0Hz}{(0\text{-}XV)}$ $XV = \frac{100}{-9} = -1.11V$ $\therefore 03\text{-}03 = \frac{-1.11}{10} \times 100\ \%$

$= -11.1\%$

Calculate the gain: $03\text{-}11 = \frac{10V}{11.1V} \times 100\% = 90.0\%$

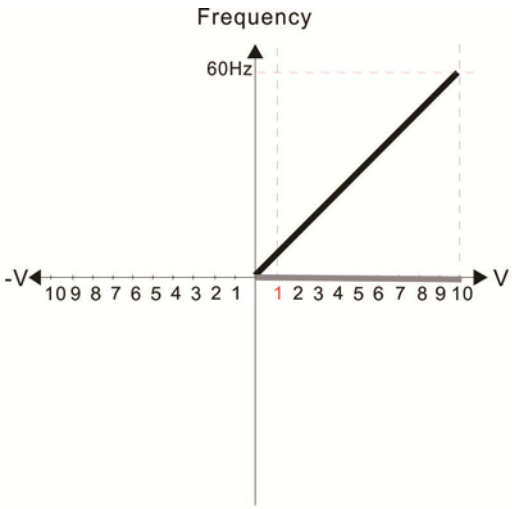

Pr.03-07~03-09 (Positive/Negative Bias Mode)

0: No bias
1: Lower than or equal to bias
2: Greater than or equal to bias
3: The absolute value of the bias voltage while serving as the center
4: Serve bias as the center

Pr.03-10 (Analog Frequency Command for Reverse Run)

0: Negative frequency is not valid. Forward and reverse run is controlled by digital keypad or external terminal.
1: Negative frequency is valid. Positive frequency = forward run; negative frequency = reverse run. Direction can not be switched by digital keypad or external terminal control.

Calculate the bias:

$\frac{60\text{-}6Hz}{10V} = \frac{6\text{-}0Hz}{(0\text{-}XV)}$ $XV = \frac{100}{-9} = -1.11V$ $\therefore 03\text{-}03 = \frac{-1.11}{10} \times 100\ \%$

$= -11.1\%$

Calculate the gain: $03\text{-}11 = \frac{10V}{11.1V} \times 100\% = 90.0\%$

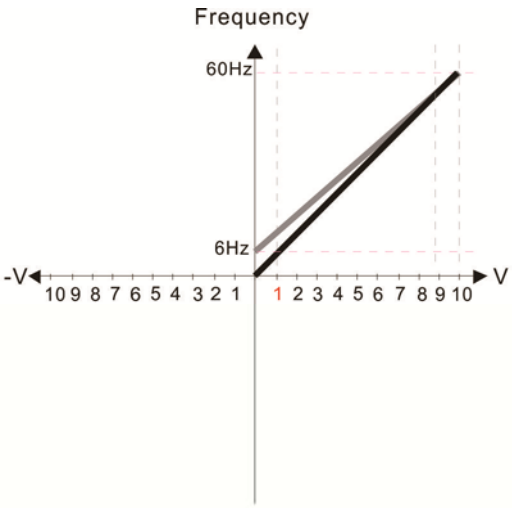

Pr.03-07~03-09 (Positive/Negative Bias Mode)

0: No bias
1: Lower than or equal to bias
2: Greater than or equal to bias
3: The absolute value of the bias voltage while serving as the center
4: Serve bias as the center

Pr.03-10 (Analog Frequency Command for Reverse Run)

0: Negative frequency is not valid. Forward and reverse run is controlled by digital keypad or external terminal.
1: Negative frequency is valid. Positive frequency = forward run; negative frequency = reverse run. Direction can not be switched by digital keypad or external terminal control.

Calculate the bias:

$\frac{60\text{-}6Hz}{10V} = \frac{6\text{-}0Hz}{(0\text{-}XV)}$ $XV = \frac{100}{-9} = -1.11V$ $\therefore 03\text{-}03 = \frac{-1.11}{10} \times 100\ \%$

$= -11.1\%$

Calculate the gain: $03\text{-}11 = \frac{10V}{11.1V} \times 100\% = 90.0\%$

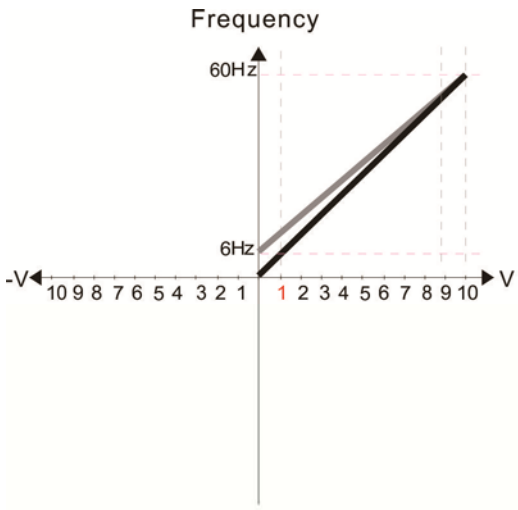

Pr.03-07~03-09 (Positive/Negative Bias Mode)
0: No bias
1: Lower than or equal to bias
2: Greater than or equal to bias
3: The absolute value of the bias voltage while serving as the center
4: Serve bias as the center

Pr.03-10 (Analog Frequency Command for Reverse Run)
0: Negative frequency is not valid. Forward and reverse run is controlled by digital keypad or external terminal.
1: Negative frequency is valid. Positive frequency = forward run; negative frequency = reverse run. Direction can not be switched by digital keypad or external terminal control.

Calculate the bias:

$\frac{60\text{-}6Hz}{10V} = \frac{6\text{-}0Hz}{(0\text{-}XV)}$ $XV = \frac{100}{-9} = -1.11V$ $\therefore 03\text{-}03 = \frac{-1.11}{10} \times 100\ \%$

$= -11.1\%$

Calculate the gain: $03\text{-}11 = \frac{10V}{11.1V} \times 100\% = 90.0\%$

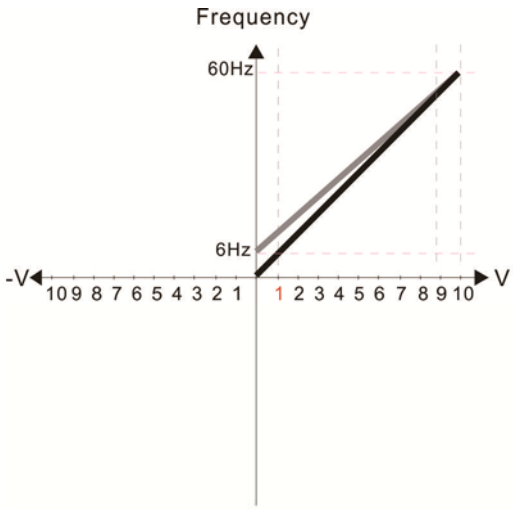

Pr.03-07~03-09 (Positive/Negative Bias Mode)
0: No bias
1: Lower than or equal to bias
2: Greater than or equal to bias
3: The absolute value of the bias voltage while serving as the center
4: Serve bias as the center

Pr.03-10 (Analog Frequency Command for Reverse Run)
0: Negative frequency is not valid. Forward and reverse run is controlled by digital keypad or external terminal.
1: Negative frequency is valid. Positive frequency = forward run; negative frequency = reverse run. Direction can not be switched by digital keypad or external terminal control.

Calculate the bias:

$\frac{60\text{-}6Hz}{10V} = \frac{6\text{-}0Hz}{(0\text{-}XV)}$ $XV = \frac{100}{-9} = -1.11V$ $\therefore 03\text{-}03 = \frac{-1.11}{10} \times 100\ \%$

$= -11.1\%$

Calculate the gain: $03\text{-}11 = \frac{10V}{11.1V} \times 100\% = 90.0\%$

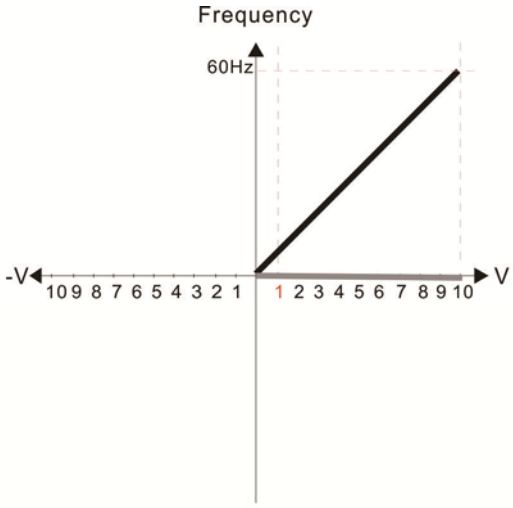

Pr.03-07~03-09 (Positive/Negative Bias Mode)
0: No bias
1: Lower than or equal to bias
2: Greater than or equal to bias
3: The absolute value of the bias voltage while serving as the center
4: Serve bias as the center

Pr.03-10 (Analog Frequency Command for Reverse Run)
0: Negative frequency is not valid. Forward and reverse run is controlled by digital keypad or external terminal.
1: Negative frequency is valid. Positive frequency = forward run; negative frequency = reverse run. Direction can not be switched by digital keypad or external terminal control.

Calculate the bias:

$\frac{60\text{-}6Hz}{10V} = \frac{6\text{-}0Hz}{(0\text{-}XV)}$ $XV = \frac{100}{-9} = -1.11V$ $\therefore 03\text{-}03 = \frac{-1.11}{10} \times 100\ \%$

$= -11.1\%$

Calculate the gain: $03\text{-}11 = \frac{10V}{11.1V} \times 100\% = 90.0\%$

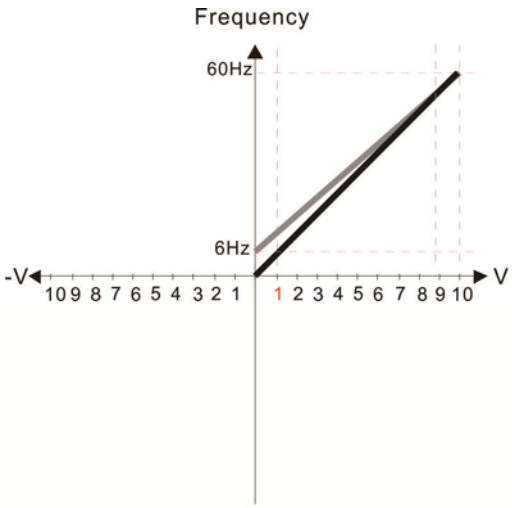

Pr.03-07~03-09 (Positive/Negative Bias Mode)
0: No bias
1: Lower than or equal to bias
2: Greater than or equal to bias
3: The absolute value of the bias voltage while serving as the center
4: Serve bias as the center

Pr.03-10 (Analog Frequency Command for Reverse Run)
0: Negative frequency is not valid. Forward and reverse run is controlled by digital keypad or external terminal.
1: Negative frequency is valid. Positive frequency = forward run; negative frequency = reverse run. Direction can not be switched by digital keypad or external terminal control.

Calculate the bias:

$\frac{60\text{-}6Hz}{10V} = \frac{6\text{-}0Hz}{(0\text{-}XV)}$ $XV = \frac{100}{-9} = -1.11V$ $\therefore 03\text{-}03 = \frac{-1.11}{10} \times 100\ \%$

$= -11.1\%$

Calculate the gain: $03\text{-}11 = \frac{10V}{11.1V} \times 100\% = 90.0\%$

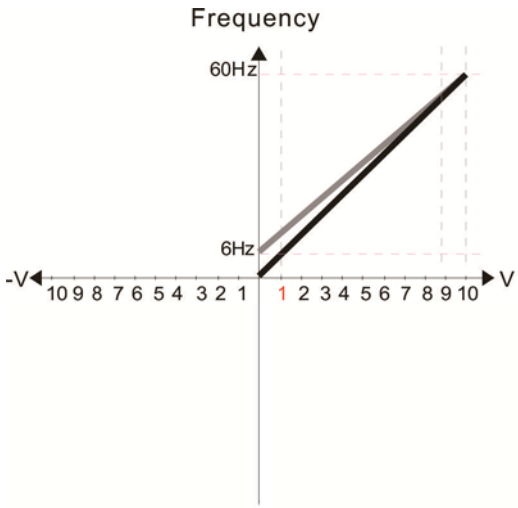

Pr.03-07~03-09 (Positive/Negative Bias Mode)
0: No bias
1: Lower than or equal to bias
2: Greater than or equal to bias
3: The absolute value of the bias voltage while serving as the center
4: Serve bias as the center

Pr.03-10 (Analog Frequency Command for Reverse Run)
0: Negative frequency is not valid. Forward and reverse run is controlled by digital keypad or external terminal.
1: Negative frequency is valid. Positive frequency = forward run; negative frequency = reverse run. Direction can not be switched by digital keypad or external terminal control.

Calculate the bias:

$\frac{60\text{-}6Hz}{10V} = \frac{6\text{-}0Hz}{(0\text{-}XV)}$ $XV = \frac{100}{-9} = -1.11V$ $\therefore 03\text{-}03 = \frac{-1.11}{10} \times 100\ \%$

$= -11.1\%$

Calculate the gain: $03\text{-}11 = \frac{10V}{11.1V} \times 100\% = 90.0\%$

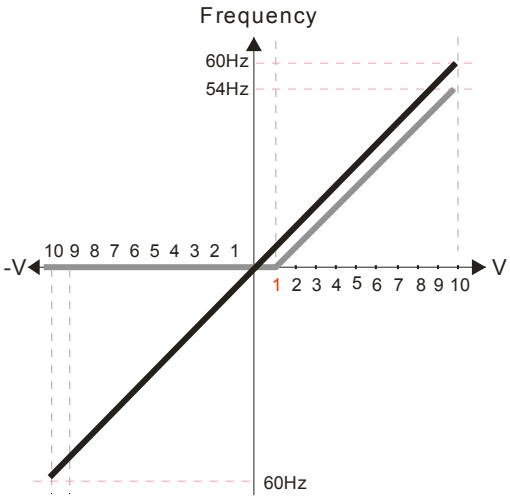

Pr.00-21=0 (Dgital keypad control and d run in FWD direction)
Pr.03-05 Analog Positive Voltage Input Bias (AUI) = 10%

Pr.03-07~03-09 (Positive/Negative Bias Mode)
0: No bias
1: Lower than or equal to bias
2: Greater than or equal to bias
3: The absolute value of the bias voltage while serving as the center
4: Serve bias as the center

Pr.03-10 (Analog Frequency Command for Reverse Run)
0: Negative frequency is not valid. Forward and reverse run is controlled by digital keypad or external terminal.
1: Neagtive frequency is valid. Positive frequency = forward run; negative frequency = reverse run. Direction can not be switched by digital keypad or external teriminal control.

Pr.00-13 Analog Positive Input Gain (AUI)= 100%
Pr.03-14 Analog Negative Input Gain (AUI)= 100%

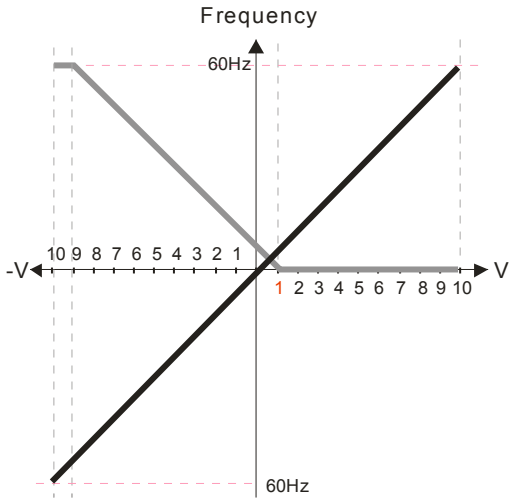

Pr.00-21=0 (Dgital keypad control and d run in FWD direction)
Pr.03-05 Analog Positive Voltage Input Bias (AUI) = 10%
Pr.03-07~03-09 (Positive/Negative Bias Mode)
0: No bias
1: Lower than or equal to bias
2: Greater than or equal to bias
3: The absolute value of the bias voltage while serving as the center
4: Serve bias as the center

Pr.03-10 (Analog Frequency Command for Reverse Run)
0: Negative frequency is not valid. Forward and reverse run is controlled by digital keypad or external terminal.
1: Neagtive frequency is valid. Positive frequency = forward run; negative frequency = reverse run. Direction can not be switched by digital keypad or external teriminal control.

Pr.00-13 Analog Positive Input Gain (AUI)= 100%
Pr.03-14 Analog Negative Input Gain (AUI)= 100%

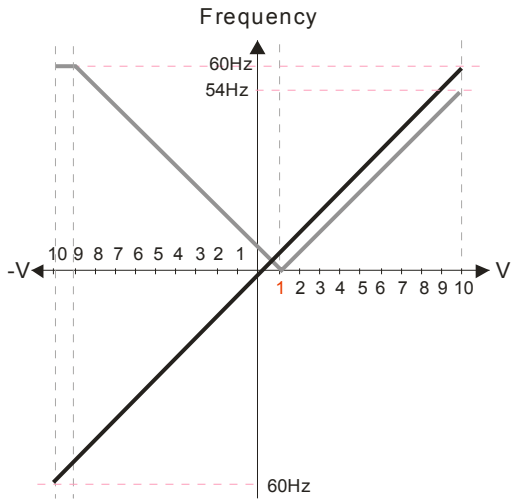

Pr.00-21=0 (Dgital keypad control and d run in FWD direction)
Pr.03-05 Analog Positive Voltage Input Bias (AUI) = 10%
Pr.03-07~03-09 (Positive/Negative Bias Mode)
0: No bias
1: Lower than or equal to bias
2: Greater than or equal to bias
3: The absolute value of the bias voltage while serving as the center
4: Serve bias as the center

Pr.03-10 (Analog Frequency Command for Reverse Run)
0: Negative frequency is not valid. Forward and reverse run is controlled by digital keypad or external terminal.
1: Neagtive frequency is valid. Positive frequency = forward run; negative frequency = reverse run. Direction can not be switched by digital keypad or external teriminal control.

Pr.00-13 Analog Positive Input Gain (AUI)= 100%
Pr.03-14 Analog Negative Input Gain (AUI)= 100%

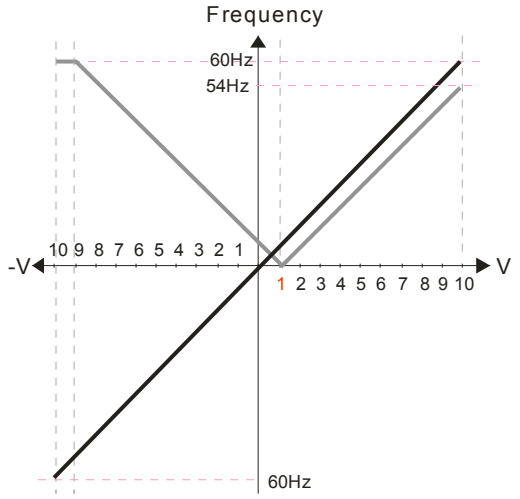

Pr.00-21=0 (Dgital keypad control and d run in FWD direction)
Pr.03-05 Analog Positive Voltage Input Bias (AUI) = 10%
Pr.03-07~03-09 (Positive/Negative Bias Mode)
0: No bias
1: Lower than or equal to bias
2: Greater than or equal to bias
3: The absolute value of the bias voltage while serving as the center
4: Serve bias as the center

Pr.03-10 (Analog Frequency Command for Reverse Run)
0: Negative frequency is not valid. Forward and reverse run is controlled by digital keypad or external terminal.
1: Neagtive frequency is valid. Positive frequency = forward run; negative frequency = reverse run. Direction can not be switched by digital keypad or external teriminal control.

Pr.00-13 Analog Positive Input Gain (AUI)= 100%
Pr.03-14 Analog Negative Input Gain (AUI)= 100%

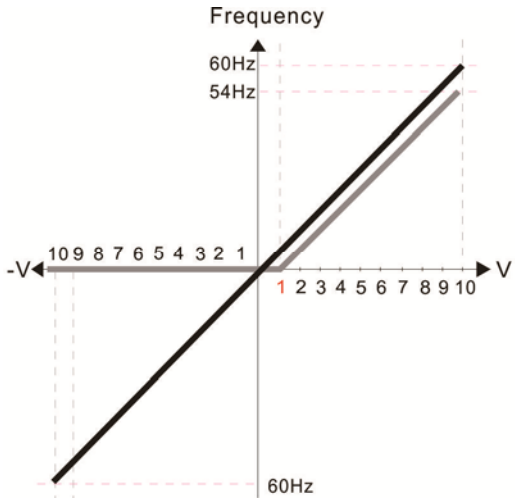

Pr.00-21=0 (Digital keypad control and run in FWD direction)
Pr.03-05 Analog Positive Voltage Input Bias (AUI) = 10%

Pr.03-07~03-09 (Positive/Negative Bias Mode)
0: No bias
1: Lower than or equal to bias
2: Greater than or equal to bias
3: The absolute value of the bias voltage while serving as the center
4: Serve bias as the center

Pr.03-13 Analog Positive Input Gain (AUI)= 100%
Pr.03-14 Analog Negative Input Gain (AUI)= 100%

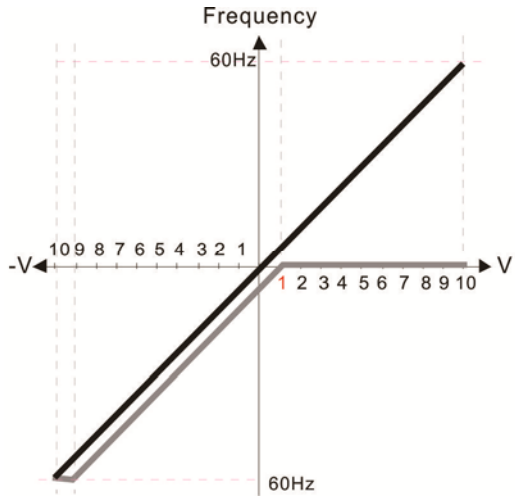

Pr.00-21=0 (Digital keypad control and run in FWD direction)
Pr.03-05 Analog Positive Voltage Input Bias (AUI) = 10%

Pr.03-07~03-09 (Positive/Negative Bias Mode)
0: No bias
1: Lower than or equal to bias
2: Greater than or equal to bias
3: The absolute value of the bias voltage while serving as the center
4: Serve bias as the center

Pr.03-13 Analog Positive Input Gain (AUI)= 100%
Pr.03-14 Analog Negative Input Gain (AUI)= 100%

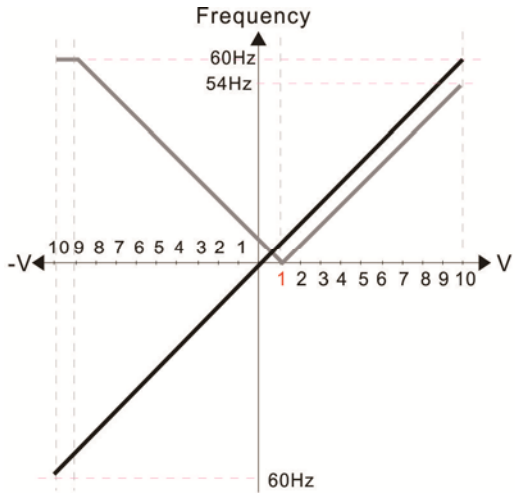

Pr.00-21=0 (Digital keypad control and run in FWD direction)
Pr.03-05 Analog Positive Voltage Input Bias (AUI) = 10%

Pr.03-07~03-09 (Positive/Negative Bias Mode)
0: No bias
1: Lower than or equal to bias
2: Greater than or equal to bias
3: The absolute value of the bias voltage while serving as the center
4: Serve bias as the center

Pr.03-13 Analog Positive Input Gain (AUI)= 100%
Pr.03-14 Analog Negative Input Gain (AUI)= 100%

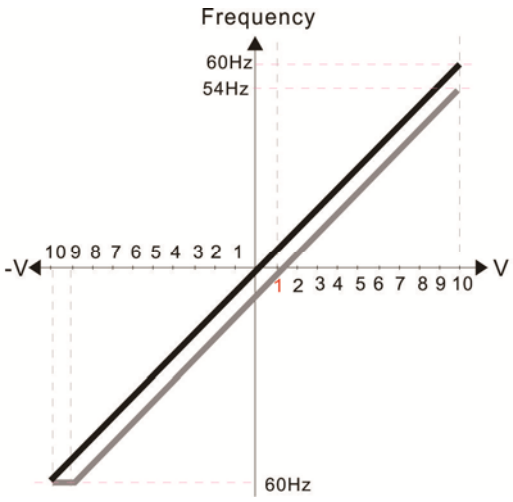

Pr.00-21=0 (Digital keypad control and run in FWD direction)
Pr.03-05 Analog Positive Voltage Input Bias (AUI) = 10%

Pr.03-07~03-09 (Positive/Negative Bias Mode)
0: No bias
1: Lower than or equal to bias
2: Greater than or equal to bias
3: The absolute value of the bias voltage while serving as the center
4: Serve bias as the center

Pr.03-13 Analog Positive Input Gain (AUI)= 100%
Pr.03-14 Analog Negative Input Gain (AUI)= 100%

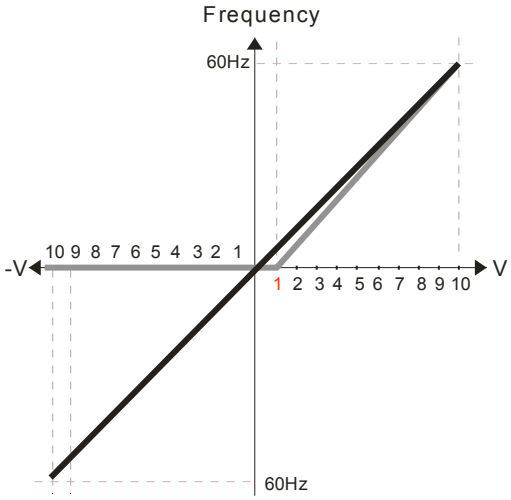

Pr.00-21=0 (Digital keypad control and run in FWD direction)
Pr.03-05 Analog Positive Voltage Input Bias (AUI) = 10%
Pr.03-07~03-09 (Positive/Negative Bias Mode)
0: No bias
1: Lower than or equal to bias
2: Greater than or equal to bias
3: The absolute value of the bias voltage while serving as the center
4: Serve bias as the center

Pr.03-10 (Analog Frequency Command for Reverse Run)
0: Negative frequency is not valid. Forward and reverse run is controlled by digital keypad or external terminal.
1: Neagtive frequency is valid. Positive frequency = forward run; negative frequency = reverse run. Direction can not be switched by digital keypad or external teriminal control.

Pr.00-13 Analog Positive Input Gain (AUI)= 111.1%
(10/9) *100% = 111.1%
Pr.00-14 Analog Negative Input Gain (AUI) = 100%

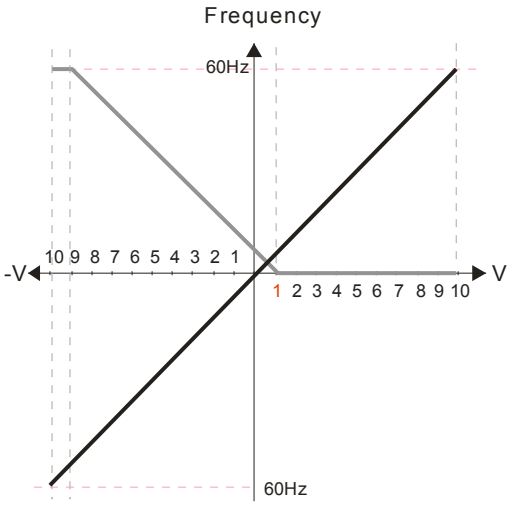

Pr.00-21=0 (Digital keypad control and run in FWD direction)
Pr.03-05 Analog Positive Voltage Input Bias (AUI) = 10%
Pr.03-07~03-09 (Positive/Negative Bias Mode)
0: No bias
1: Lower than or equal to bias
2: Greater than or equal to bias
3: The absolute value of the bias voltage while serving as the center
4: Serve bias as the center

Pr.03-10 (Analog Frequency Command for Reverse Run)
0: Negative frequency is not valid. Forward and reverse run is controlled by digital keypad or external terminal.
1: Neagtive frequency is valid. Positive frequency = forward run; negative frequency = reverse run. Direction can not be switched by digital keypad or external teriminal control.

Pr.00-13 Analog Positive Input Gain (AUI)= 111.1%
(10/9) *100% = 111.1%
Pr.00-14 Analog Negative Input Gain (AUI) = 100%

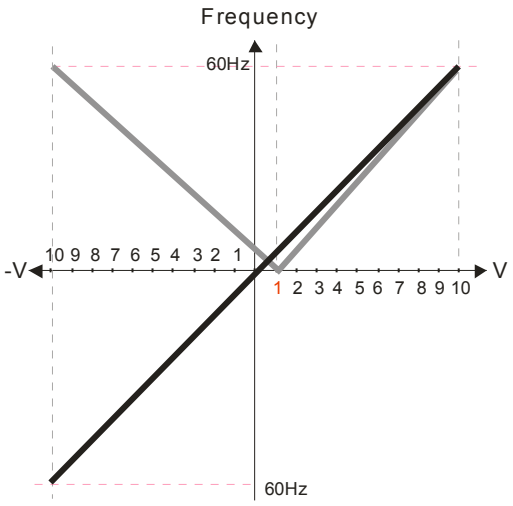

Pr.00-21=0 (Digital keypad control and run in FWD direction)
Pr.03-05 Analog Positive Voltage Input Bias (AUI) = 10%
Pr.03-07~03-09 (Positive/Negative Bias Mode)
0: No bias
1: Lower than or equal to bias
2: Greater than or equal to bias
3: The absolute value of the bias voltage while serving as the center
4: Serve bias as the center

Pr.03-10 (Analog Frequency Command for Reverse Run)
0: Negative frequency is not valid. Forward and reverse run is controlled by digital keypad or external terminal.
1: Neagtive frequency is valid. Positive frequency = forward run; negative frequency = reverse run. Direction can not be switched by digital keypad or external teriminal control.

Pr.00-13 Analog Positive Input Gain (AUI)= 111.1%
(10/9) *100% = 111.1%
Pr.00-14 Analog Negative Input Gain (AUI) = 100%

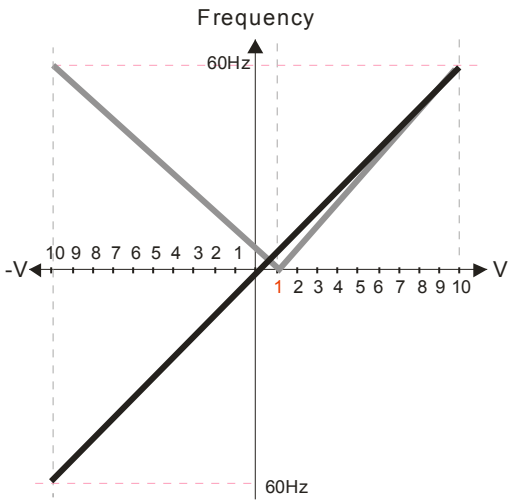

Pr.00-21=0 (Digital keypad control and run in FWD direction)
Pr.03-05 Analog Positive Voltage Input Bias (AUI) = 10%
Pr.03-07~03-09 (Positive/Negative Bias Mode)
0: No bias
1: Lower than or equal to bias
2: Greater than or equal to bias
3: The absolute value of the bias voltage while serving as the center
4: Serve bias as the center

Pr.03-10 (Analog Frequency Command for Reverse Run)
0: Negative frequency is not valid. Forward and reverse run is controlled by digital keypad or external terminal.
1: Neagtive frequency is valid. Positive frequency = forward run; negative frequency = reverse run. Direction can not be switched by digital keypad or external teriminal control.

Pr.00-13 Analog Positive Input Gain (AUI)= 111.1%
(10/9) *100% = 111.1%
Pr.00-14 Analog Negative Input Gain (AUI) = 100%

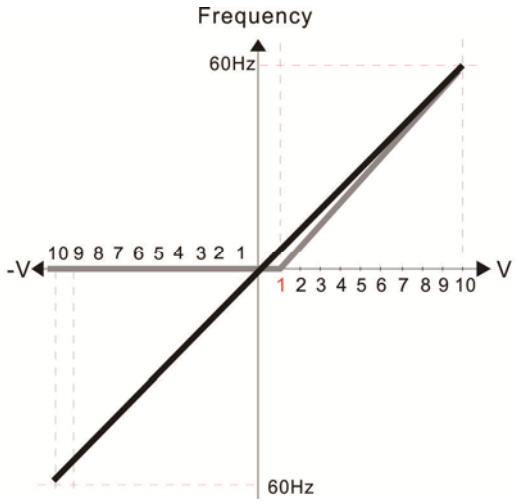

Pr.00-21=0 (Digital keypad control and run in FWD direction)
Pr.03-05 Analog Positive Voltage Input Bias (AUI) = 10%

Pr.03-07~03-09 (Positive/Negative Bias Mode)
0: No bias
1: Lower than or equal to bias
2: Greater than or equal to bias
3: The absolute value of the bias voltage while serving as the center
4: Serve bias as the center

Pr.00-13 Analog Positive Input Gain (AUI)= 111.1%
(10/9) *100% = 111.1%
Pr.03-14 Analog Negative Input Gain (AUI)= 100%

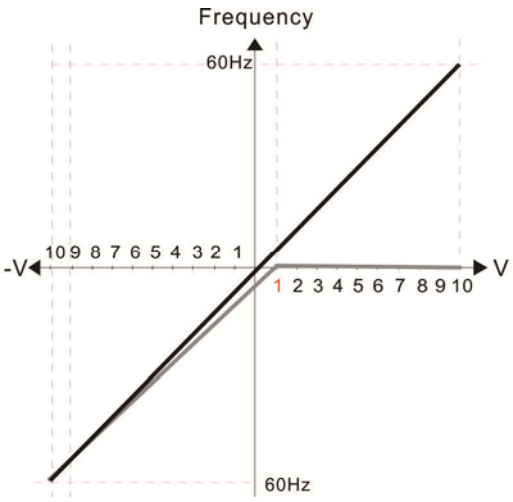

Pr.00-21=0 (Digital keypad control and run in FWD direction)
Pr.03-05 Analog Positive Voltage Input Bias (AUI) = 10%

Pr.03-07~03-09 (Positive/Negative Bias Mode)
0: No bias
1: Lower than or equal to bias
2: Greater than or equal to bias
3: The absolute value of the bias voltage while serving as the center
4: Serve bias as the center

Pr.03-13 Analog Positive Input Gain (AUI)= 100%
Pr.03-14 Analog Negative Input Gain (AUI)= 90.9%
(10/11) *100% = 90.9%

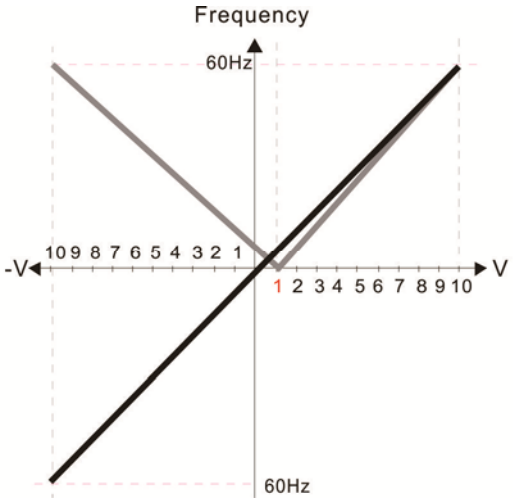

Pr.00-21=0 (Digital keypad control and run in FWD direction)
Pr.03-05 Analog Positive Voltage Input Bias (AUI) = 10%

Pr.03-07~03-09 (Positive/Negative Bias Mode)
0: No bias
1: Lower than or equal to bias
2: Greater than or equal to bias
3: The absolute value of the bias voltage while serving as the center
4: Serve bias as the center

Pr.00-13 Analog Positive Input Gain (AUI)= 111.1%
(10/9) *100% = 111.1%
Pr.03-14 Analog Negative Input Gain (AUI)= 90.9%
(10/11) *100% = 90.9%

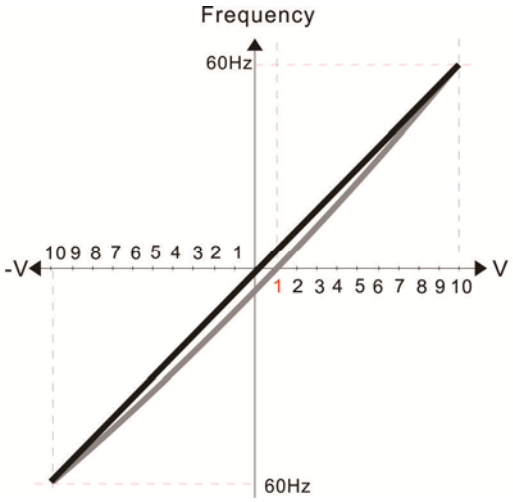

Pr.00-21=0 (Digital keypad control and run in FWD direction)
Pr.03-05 Analog Positive Voltage Input Bias (AUI) = 10%

Pr.03-07~03-09 (Positive/Negative Bias Mode)
0: No bias
1: Lower than or equal to bias
2: Greater than or equal to bias
3: The absolute value of the bias voltage while serving as the center
4: Serve bias as the center

Pr.00-13 Analog Positive Input Gain (AUI)= 111.1%
(10/9) *100% = 111.1%
Pr.03-14 Analog Negative Input Gain (AUI)= 90.9%
(10/11) *100% = 90.9%

03-10 Analog Frequency Command for Reverse Run

Factory Setting: 0

Settings
0: Negative frequency is not valid. Forward and reverse run is controlled by digital keypad or external terminal.
1: Negative frequency is valid. Positive frequency = forward run; negative frequency = reverse run. Run direction can not be switched by digital keypad or the external terminal control.

- Parameter 03-10 is used to enable reverse run command when a negative frequency (negative bias and gain) is input to AVI or ACI analog signal input (except AUI).
- Condition for negative frequency (reverse)
  1. Pr03-10=1
  2. Bias mode=Serve bias as center
  3. Corresponded analog input gain < 0(negative), make input frequency be negative.
- In using addition function of analog input (Pr03-18=1), when analog signal is negative after adding, this parameter can be set for allowing reverse or not. The result after adding will be restricted by “Condition for negative frequency (reverse)”

03-11 Analog Input Gain (AVI)
03-12 Analog Input Gain (ACI)
03-13 Analog Positive Input Gain (AUI)
03-14 Analog Negative Input Gain (AUI)

Factory Setting: 100.0

Settings -500.0~500.0%

- Parameters 03-03 to 03-14 are used when the source of frequency command is the analog voltage/current signal.

03-15 Analog Input Filter Time (AVI)
03-16 Analog Input Filter Time (ACI)
03-17 Analog Input Filter Time (AUI)

Factory Setting: 0.01

Settings 0.00~20.00 sec

- These input delays can be used to filter noisy analog signal.
- When the setting of the time constant is too large, the control will be stable but the control response will be slow. When the setting of time constant is too small, the control response will be faster but the control may be unstable. To find the optimal setting, please adjust the setting according to the control stable or response status.

03-18 Addition Function of the Analog Input

Factory Setting: 0

Settings 0: Disable (AVI, ACI, AUI)
1: Enable

- When Pr03-18 is set to 1:
  EX1: Pr03-00=Pr03-01=1 Frequency command= AVI+ACI
  EX2: Pr03-00=Pr03-01=Pr03-02=1 Frequency command = AVI+ACI+AVI2
  EX3: Pr03-00=Pr03-02=1 Frequency command = AVI+AVI2
  EX4: Pr03-01=Pr03-02=1 Frequency command = ACI+AVI2
- When Pr.03-18 is set to 0 and the analog input setting is the same, the priority for AVI, ACI and AUI are AVI>ACI>AUI.

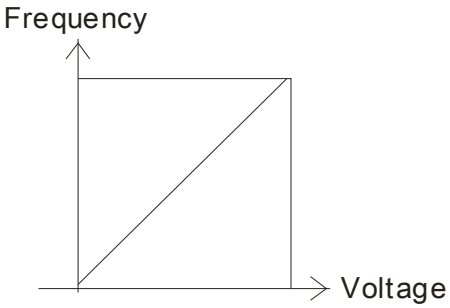

$$\text{Fcommand}=[(\text{ay}-\text{bias})*\text{gain}]*\frac{\text{Fmax}(01\text{-}00)}{10\text{V or }16\text{mA or }20\text{mA}}$$

Fcommand: the corresponding frequency for 10V or 20mA
ay : 0-10V, 4-20mA, 0-20mA
bias : Pr.03-03,Pr. 03-04, Pr.03-05
gain : Pr.03-11, Pr.03-12, Pr.03-13, Pr.03-14

03-19 Treatment to 4-20mA Analog Input Signal Loss

Factory Setting: 0

Settings 0: Disable
1: Continue operation at the last frequency
2: Decelerate to stop
3: Stop immediately and display ACE

- This parameter determines the behavior when 4~20mA signal is loss, when AVIc(Pr.03-28=2) or ACIc (03-29=0).
- When Pr.03-28 is not set to 2, it means the voltage input to AVI terminal is 0-10V or 0-20mA. At this moment, Pr.03-19 will be invalid.
- When Pr.03-29 is set to 1, it means the voltage input to ACI terminal is for 0-10V. At this moment, Pr.03-19 will be invalid.
- When setting is 1 or 2, it will display warning code “AnL” on the keypad. It will be blinking until the loss of the ACI signal is recovered.
- When the motor drive stops, the condition of warning does not exist, then the warning will disappear.

03-20 Multi-function Output 1 (AFM1)

Factory Setting: 0

03-23 Multi-function Output 2 (AFM2)

Factory Setting: 0

Settings 0~25

Function Chart

Settings	Functions	Descriptions
0	Output frequency (Hz)	Max. frequency Pr.01-00 is regarded as 100%.
1	Frequency command (Hz)	Max. frequency Pr.01-00 is regarded as 100%.
2	Motor speed (Hz)	600Hz is regarded as 100%
3	Output current (rms)	(2.5 X rated current) is regarded as 100%
4	Output voltage	(2 X rated voltage) is regarded as 100%
5	DC Bus Voltage	450V (900V)=100%
6	Power factor	-1.000~1.000=100%
7	Power	Rated power is regarded as 100%
8	Output torque	Full-load torque is regarded as 100%
9	AVI	0~10V=0~100%
10	ACI	0~20mA=0~100%
11	AUI	-10~10V=0~100%
12	q-axis current (Iq)	(2.5 X rated current) is regarded as 100%
13	q-axis feedback value (Iq)	(2.5 X rated current) is regarded as 100%
14	d-axis current (Id)	(2.5 X rated current) is regarded as 100%
15	d-axis feedback value (Id)	(2.5 X rated current) is regarded as 100%
16	q-axis voltage (Vq)	250V (500V) =100%
17	d-axis voltage(Vd)	250V (500V) =100%
18	Torque command	Rated torque is regarded as 100%
19	PG2 frequency command	Max. frequency Pr.01-00 is regarded as 100%.
20	Output for CANopen control	For CANopen analog output
21	RS485 analog output	For communication output (CMC-MOD01, CMC-EIP01, CMC-PN01, CMC-DN01)
22	Analog output for communication card	For communication output (CMC-MOD01, CMC-EIP01, CMC-PN01, CMC-DN01)
23	Constant voltage/current output	Pr.03-32 and Pr.03-33 controls voltage/current output level 0~100% of Pr.03-32 corresponds to 0~10V of AFM1.
24	Reserved	
25	CAN & 485 output	

03-21 Gain of Analog Output 1 (AFM1)

Factory Setting: 100.0

03-24 Gain of Analog Output 2 (AFM2)

Factory Setting: 100.0

Settings 0~500.0%

- It is used to adjust the analog voltage level (Pr.03-20) that terminal AFM outputs.
- This parameter is set the corresponding voltage of the analog output 0.

03-22 Analog Output 1 when in REV Direction (AFM1)

Factory Setting: 0

03-25 Analog Output 2 when in REV Direction (AFM2)

Factory Setting: 0

Settings 0: Absolute value in REV direction

1: Output 0V in REV direction; output 0-10V in FWD direction

2: Output 5-0V in REV direction; output 5-10V in FWD direction

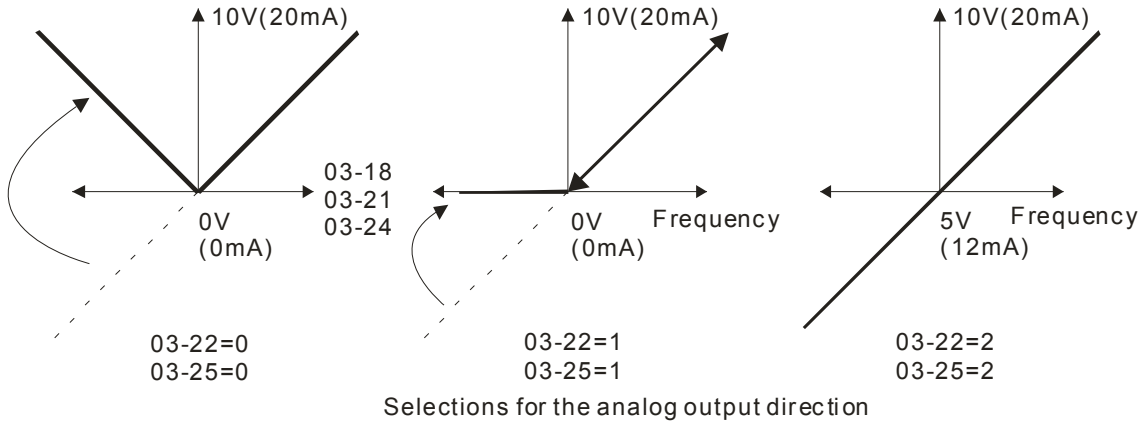

Selections for the analog output direction

03-26 Reserved

03-27 AFM2 Output Bias

Factory Setting: 0.00

Settings -100.00~100.00%

- Example 1, AFM2 0-10V is set output frequency, the output equation is

$$10\text{V}\times\left(\frac{\text{Output Frequency}}{01\text{-}00}\right)\times 03\text{-}24+10\text{V}\times 03\text{-}27$$

- Example 2, AFM2 0-20mA is set output frequency, the output equation is

$$20\text{mA}\times\left(\frac{\text{Output Frequency}}{01\text{-}00}\right)\times 03\text{-}24+20\text{mA}\times 03\text{-}27$$

- Example 3, AFM2 4-20mA is set output frequency, the output equation is

$$4\text{mA}+16\text{mA}\times\left(\frac{\text{Output Frequency}}{01\text{-}00}\right)\times 03\text{-}24+16\text{mA}\times 03\text{-}27$$

- This parameter can set the corresponded voltage of 0 for analog output.

03-28 AVI Selection

Factory Setting: 0

Settings 0: 0-10V
1: 0-20mA
2: 4-20mA

03-29 ACI Selection

Factory Setting: 0

Settings 0: 4-20mA
1: 0-10V
2: 0-20mA

When changing the input mode, please check if the switch of external terminal (SW3, SW4) corresponds to the setting of Pr.03-28~03-29.

03-30 Status of PLC Output Terminal

Factory Setting: ##

Settings 0~65535
Monitor the status of PLC analog output terminals

P.03-30 shows the external multi-function output terminal that used by PLC.

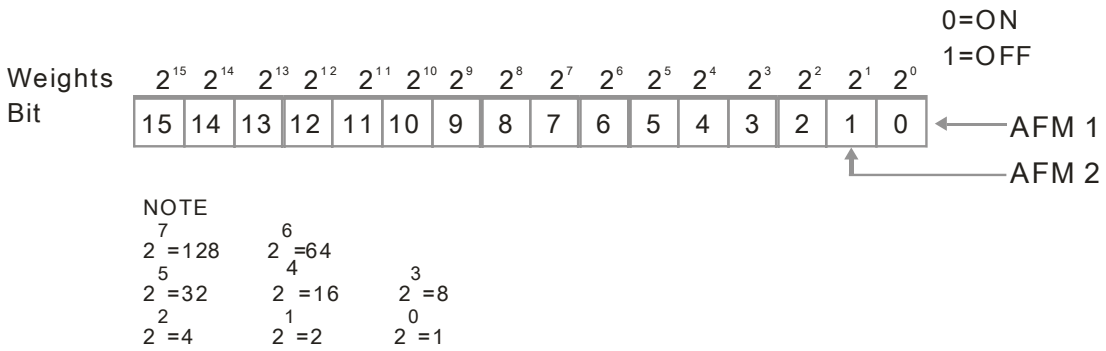

For Example:

If the value of Pr.03-30 displays 0002h(Hex), it means AFM1and AFM2 are used by PLC.

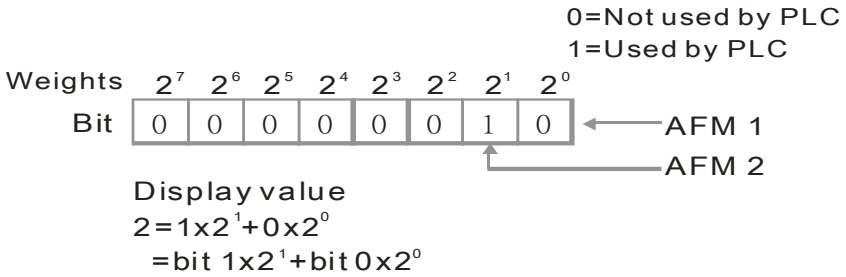

03-31 AFM2 0-20mA Output Selection

Factory Setting: 0

Settings 0: 0-20mA output
1: 4-20mA output

03-32	AFM1 DC output setting level
03-33	AFM2 DC Output Setting Level

Factory Setting: 0.00

Settings 0.00~100.00%

03-34	Reserved

03-35	AFM1 Filter Output Time
03-36	AFM2 Filter Output Time

Factory Setting: 0.01

Settings 0.00~20.00 Seconds

03-37 ~ 03-43	Reserved

03-44	MO by AI level

Factory Setting: 0

Settings 0: AVI
1: ACI
2: AUI

03-45	AI Upper level

Factory Setting: 50%

Settings -100%~100%

03-46	AI Lower level

Factory Setting: 50%

Settings -100%~100%

This function requires working with Multi-function Output item “67” Analog signal level achieved. The MO active when AI input level is higher than Pr03-45 AI Upper level. The MO shutoffs when the AI input is lower that Pr03-46 AI Lower level.

AI Upper level must be higher than AI Lower level

03-47 ~ 03-49	Reserved

03-50	Analog Input Curve Selection

Factory Setting: 0

Settings 0: Regular Curve
1: 3 point curve of AVI
2: 3 point curve of ACI

3: 3 point curve of AVI & ACI
4: 3 point curve of AUI
5: 3 point curve of AVI & AUI
6: 3 point curve of ACI & AUI
7: 3 point curve of AVI & ACI & AUI

03-51	AVI Low Point
	Factory Setting: 0.00
Settings	03-28=0, 0.00~10.00V 03-28≠0, 0.00~20.00mA

03-52	AVI Proportional Low Point
	Factory Setting: 0.00
Settings	-100.00~100.00%

03-53	AVI Mid Point
	Factory Setting: 5.00
Settings	03-28=0, 0.00~10.00V 03-28≠0, 0.00~20.00mA

03-54	AVI Proportional Mid Point
	Factory Setting: 50.00
Settings	-100.00~100.00%

03-55	AVI High Point
	Factory Setting: 10.00
Settings	03-28=0, 0.00~10.00V 03-28≠0, 0.00~20.00mA

03-56	AVI Proportional High Point
	Factory Setting: 100.00
Settings	-100.00~100.00%

- When Pr.03-28 = 0, AVI setting is 0-10V and the unit is in voltage (V).
- When Pr.03-28 ≠ 0, AVI setting is 0-20mA or 4-20mA and the unit is in current (mA).
- When setting analog input AVI to frequency command, it 100% corresponds to Fmax (Pr.01-00 Max. operation frequency).
- The 3 parameters (Pr03-51, Pr03-53 and Pr03-53) must meet the following argument: P03-51 < P03-53 < P03-55. The 3 proportional points (Pr03-52, Pr03-54 and Pr03-56) doesn't have any limit. Between two points is a linear calculation. The ACI and AUI are same as AVI.
- The output % will become 0% when the AVI input value is lower than low point setting.

For example:

P03-51 = 1V; P03-52 = 10%. The output will become 0% when AVI input is lower than 1V. If the AVI input is swing between 1V and 1.1V, drive's output frequency will beats between 0% and 10%

03-57 ACI Low Point

Factory Setting: 4.00

Settings Pr.03-29=1, 0.00~10.00V
Pr.03-29≠1, 0.00~20.00mA

03-58 ACI Proportional Low Point

Factory Setting: 0.00

Settings -100.00~100.00%

03-59 ACI Mid Point

Factory Setting: 12.00

Settings 03-29=1, 0.00~10.00V
03-29≠1, 0.00~20.00mA

03-60 ACI Proportional Mid Point

Factory Setting: 50.00

Settings -100.00~100.00%

03-61 ACI High Point

Factory Setting: 20.00

Settings 03-29=1, 0.00~10.00V
03-29≠1, 0.00~20.00mA

03-62 ACI Proportional High Point

Factory Setting: 100.00

Settings -100.00~100.00%

- When Pr.03-29=1, ACI setting is 0-10V and the unit is in voltage (V).
- When Pr.03-29≠1, ACI setting is 0-20mA or 4-20mA and the unit is in current (mA).
- When setting analog input ACI to frequency command, it 100% corresponds to Fmax (Pr.01-00 Max. operation frequency).
- The 3 parameters (Pr03-57, Pr03-59 and Pr03-61) must meet the following argument: P03-57 < P03-59 < P03-61. The 3 proportional points (Pr03-58, Pr03-60 and Pr03-62) doesn't have any limit. Between two points is a linear calculation.
- The output % will become 0% when the ACI input value is lower than low point setting.
  For example:
  P03-57 = 2mA; P03-58 = 10%. The output will become 0% when AVI input is lower than 2mA. If the ACI input is swing between 2mA and 2.1mA, drive's output frequency will beats between 0% and 10%.

03-63 Positive AUI Voltage Low Point

Factory Setting: 0.00

Settings 0.00~10.00V

03-64 Positive AUI Voltage Proportional Low Point

Factory Setting: 0.00

Settings -100.00%~100.00%

03-65 Positive AUI Voltage Mid Point

Factory Setting: 5.00

Settings 0.00~10.00V

03-66 Positive AUI Voltage Proportional Mid Point

Factory Setting: 50.00

Settings -100.00%~100.00%

03-67 Positive AUI Voltage High Point

Factory Setting: 10.00

Settings 0.00~10.00V

03-68 Positive AUI Voltage Proportional High Point

Factory Setting: 100.00

Settings -100.00%~100.00%

- When setting positive voltage AUI to frequency command, it 100% corresponds to Fmax (Pr.01-00 Max. operation frequency) and the motor runs in forward direction.
- Three of the positive voltage AUI points can be set according to user's demand on voltage and proportion, there is no setting limit for AUI points.

03-69 Negative AUI Voltage Low Point

Factory Setting: 0.00

Settings -10.00V~0.00

03-70 Negative AUI Voltage Proportional Low Point

Factory Setting: 0.00

Settings -100.00~100.00%

03-71 Negative AUI Voltage Mid Point

Factory Setting: -5.00

Settings -10.00V~0.00

03-72 Negative AUI Voltage Proportional Mid Point

Factory Setting: -50.00

Settings -100.00~100.00%

03-73 Negative AUI Voltage High Point

Factory Setting: -10.00

Settings -10.00V~0.00

03-74 Negative AUI Voltage Proportional High Point

Factory Setting: -100.00

Settings -100.00~100.00%

- When setting negative voltage AUI to frequency command, it 100% corresponds to Fmax (Pr.01-00 Max. operation frequency) and the motor runs in reverse direction.
- Three of the negative voltage AUI points can be set according to user's demand on voltage and proportion, there is no setting limit for AUI points.

- The 3 parameters (Pr03-69, Pr03-71 and Pr03-73) must meet the following argument: P03-69 < P03-71 < P03-73. The 3 proportional points (Pr03-70, Pr03-72 and Pr03-74) doesn't have any limit. Between two points is a linear calculation.
- The output % will become 0% when the negative AUI input value is lower than low point setting. For example:
  P03-63=-1V; P03-64 = 10%. The output will become 0% when AUI input is bigger than -1V. If the AUI input is swing between -1V and -1.1V, drive's output frequency will beats between 0% and 10%.

04 Multi-Step Speed Parameters

This parameter can be set during operation.

04-00	1st Step Speed Frequency
04-01	2nd Step Speed Frequency
04-02	3rd Step Speed Frequency
04-03	4th Step Speed Frequency
04-04	5th Step Speed Frequency
04-05	6th Step Speed Frequency
04-06	7th Step Speed Frequency
04-07	8th Step Speed Frequency
04-08	9th Step Speed Frequency
04-09	10th Step Speed Frequency
04-10	11th Step Speed Frequency
04-11	12th Step Speed Frequency
04-12	13th Step Speed Frequency
04-13	14th Step Speed Frequency
04-14	15th Step Speed Frequency

Factory Setting: 0.00

Settings 0.00~599.00Hz

- The Multi-function Input Terminals (refer to setting 1~4 of Pr.02-01~02-08 and 02-26~02-31) are used to select one of the AC motor drive Multi-step speeds(max. 15 speeds). The speeds (frequencies) are determined by Pr.04-00 to 04-14 as shown in the following.
- The run/stop command can be controlled by the external terminal/digital keypad/communication via Pr.00-21.
- Each one of multi-step speeds can be set within 0.00~600.00Hz during operation.
- Explanation for the timing diagram for multi-step speeds and external terminals

  The Related parameter settings are:

  1. Pr.04-00~04-14: setting multi-step speeds (to set the frequency of each step speed)
  2. Pr.02-01~02-08, 02-26~02-31: setting multi-function input terminals (multi-step speed 1~4)
     - Related parameters: 01-22 JOG Frequency, 02-01 Multi-function Input Command 1 (MI1), 02-02 Multi-function Input Command 2 (MI2), 02-03 Multi-function Input Command 3 (MI3), 02-04 Multi-function Input Command 4 (MI4)

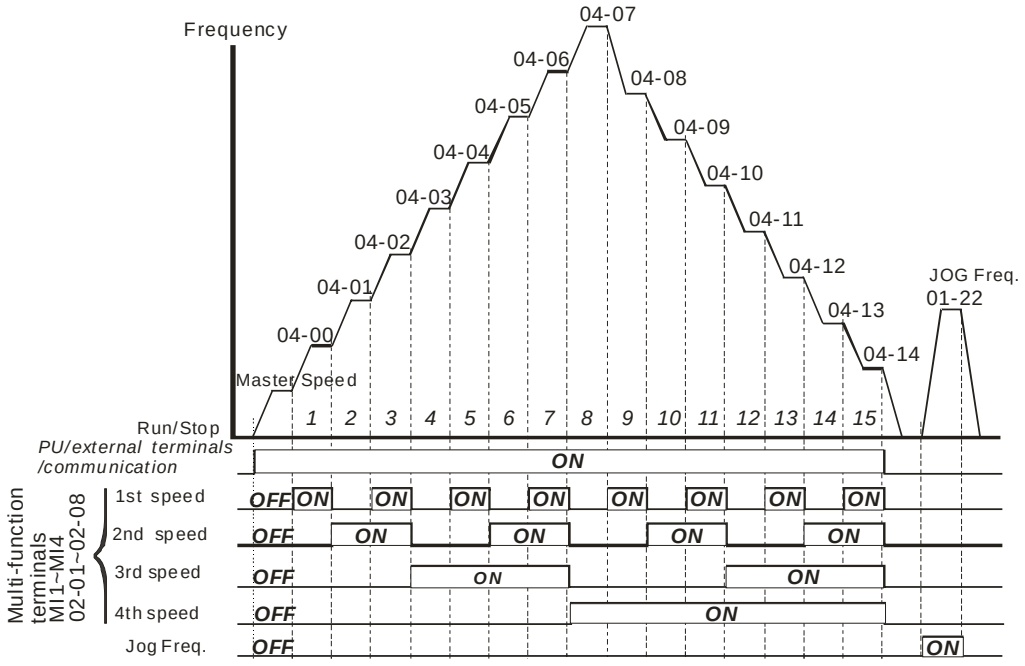

Multi-speed via External Terminals

04-16	Position command 1 (pulse)
04-18	Position command 2 (pulse)
04-20	Position command 3 (pulse)
04-22	Position command 4 (pulse)
04-24	Position command 5 (pulse)
04-26	Position command 6 (pulse)
04-28	Position command 7 (pulse)
04-30	Position command 8 (pulse)
04-32	Position command 9 (pulse)
04-34	Position command 10 (pulse)
04-36	Position command 11 (pulse)
04-38	Position command 12 (pulse)
04-40	Position command 13 (pulse)
04-42	Position command 14 (pulse)
04-44	Position command 15 (pulse)

Factory Setting: 0

Settings -32767~32767

Please refer to Pr.02-01~02-08 (Multi-function Input Command) for description on setting 34 (Switch between multi-step position and multi-speed control) and setting 36 (Enable multi-step position learning function).

Multi-step position corresponding	MI4	MI3	MI2	MI1	Multi-step speed corresponding
10-19	0	0	0	0	Positioning for Encoder Position
04-16 Position command 1 (pulse)	0	0	0	1	04-00 1st step speed frequency
04-18 Position command 2 (pulse)	0	0	1	0	04-01 2nd step speed frequency
04-20 Position command 3 (pulse)	0	0	1	1	04-02 3rd step speed frequency
04-22 Position command 4 (pulse)	0	1	0	0	04-03 4th step speed frequency
04-24 Position command 5 (pulse)	0	1	0	1	04-04 5th step speed frequency
04-26 Position command 6 (pulse)	0	1	1	0	04-05 6th step speed frequency
04-28 Position command 7 (pulse)	0	1	1	1	04-06 7th step speed frequency
04-30 Position command 8 (pulse)	1	0	0	0	04-07 8th step speed frequency
04-32 Position command 9 (pulse)	1	0	0	1	04-08 9th step speed frequency
04-34 Position command 10 (pulse)	1	0	1	0	04-09 10th step speed frequency
04-36 Position command 11 (pulse)	1	0	1	1	04-10 11th step speed frequency
04-38 Position command 12 (pulse)	1	1	0	0	04-11 12th step speed frequency
04-40 Position command 13 (pulse)	1	1	0	1	04-12 13th step speed frequency
04-42 Position command 14 (pulse)	1	1	1	0	04-13 14th step speed frequency
04-44 Position command 15 (pulse)	1	1	1	1	04-14 15th step speed frequency

04-15	Position command 1 (rotation)
04-17	Position command 2 (rotation)
04-19	Position command 3 (rotation)
04-21	Position command 4 (rotation)
04-23	Position command 5 (rotation)
04-25	Position command 6 (rotation)
04-27	Position command 7 (rotation)
04-29	Position command 8 (rotation)
04-31	Position command 9 (rotation)
04-33	Position command 10 (rotation)
04-35	Position command 11 (rotation)
04-37	Position command 12 (rotation)
04-39	Position command 13 (rotation)
04-41	Position command 14 (rotation)
04-43	Position command 15 (rotation)

To switch the target position of the external terminal, set multi-function input command, Pr.02-01=1, Pr.02-02=2, Pr.02-03=3, Pr.02-04= 4 by selecting the P2P target position via multi-step speed.

Setting: Target Position = 04-15 × (10-01*4) + 04-16

Multi-step Speed Status	Target Position of P2P			Maximum Speed of P2P	
0000	0			11-00 bit8=0	11-00 bit8=1
0001	Position 1	04-15	04-16	11-43	04-00
0010	Position 2	04-17	04-18		04-01
0011	Position 3	04-19	04-20		04-02
0100	Position 4	04-21	04-22		04-03
0101	Position 5	04-23	04-24		04-04
0110	Position 6	04-25	04-26		04-05
0111	Position 7	04-27	04-28		04-06
1000	Position 8	04-29	04-30	11-43	04-07
1001	Position 9	04-31	04-32		04-08
1010	Position 10	04-33	04-34		04-09
1011	Position 11	04-35	04-36		04-10
1100	Position 12	04-37	04-38		04-11
1101	Position 13	04-39	04-40		04-12
1110	Position 14	04-41	04-42		04-13
1111	Position 15	04-43	04-44		04-14

04-50	PLC Buffer 0
04-51	PLC Buffer 1
04-52	PLC Buffer 2
04-53	PLC Buffer 3
04-54	PLC Buffer 4
04-55	PLC Buffer 5
04-56	PLC Buffer 6
04-57	PLC Buffer 7
04-58	PLC Buffer 8
04-59	PLC Buffer 9
04-60	PLC Buffer 10
04-61	PLC Buffer 11
04-62	PLC Buffer 12
04-63	PLC Buffer 13
04-64	PLC Buffer 14
04-65	PLC Buffer 15
04-66	PLC Buffer 16
04-67	PLC Buffer 17
04-68	PLC Buffer 18
04-69	PLC Buffer 19

Factory Setting: 0

Settings 0~65535

The Pr 04-50~Pr04-69 can be combined with PLC or HMI programming for variety application.

05 Motor Parameters

✓ This parameter can be set during operation.

05-00 Motor Auto Tuning

Factory Setting: 0

Settings
0: No function
1: Rolling test for induction motor(IM) (Rs, Rr, Lm, Lx, no-load current) [motor running]
2: Static test for induction motor [motor not running]
3: No function
4: Dynamic test for PM motor magnetic pole [motor running]
5: Dynamic test for PM (SPM) motor [motor running]
6: Rolling test for IM motor flux curve [motor running]
12: FOC Sensorless inertia estimation [motor running]
13: Static test for PM(IPM) motor

Induction Motor

📖 This parameter can conduct motor parameters auto test. When setting as 1, motor will roll for more than one round.

📖 Press 【Run】to begin auto tuning when the setting is done. The measured value will be written into motor 1 (Pr.05-05 ~05-09, Rs, Rr, Lm, Lx, no-load current) and motor 2 (Pr.05-17 to Pr.05-21) automatically.

To begin AUTO-Tuning in rolling test:

1. Make sure that all the parameters are set to factory settings (Pr00-02=9 or 10) and the motor wiring is correct.
2. Make sure the motor has no-load before executing auto-tuning and the shaft is not connected to any belt or gear motor. It is recommended to set to 2 if the motor can't separate from the load.
3. Please set motor related parameters according to motor nameplate.

	Motor 1 Parameter	Motor 2 Parameter
Motor Rated Frequency	01-01	01-35
Motor Rated Voltage	01-02	01-36
Motor Full-load Current	05-01	05-13
Motor Rated Power	05-02	05-14
Motor Rated Speed	05-03	05-15
Motor Pole Numbers	05-04	05-16

4. Set Pr.05-00=1 and press【Run】, the drive will begin auto-tuning. Please be aware of the motor that it starts spinning as【Run】 is pressed.
5. When auto-tuning is completed, please check if the measured values are written into motor 1 (Pr.05-05 ~05-09) and motor 2 (Pr.05-17 ~05-21) automatically.

6. Mechanical equivalent circuit

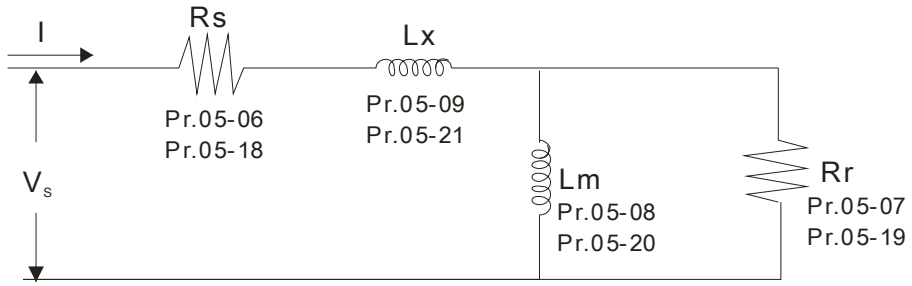

※ If Pr.05-00 is set to 2 (static test), user needs to input the no-load current value of motor into Pr.05-05 for motor 1/Pr.05-17 for motor 2.

05-01 Full-load Current of Induction Motor 1（A）

Unit: Amper

Factory Setting: #.##

Settings 10 to 120% of drive's rated current

This value should be set according to the rated current of the motor as indicated on the motor nameplate. The factory setting is 90% X rated current.

Example: The rated current for 7.5HP (5.5kW) is 25 and factory setting is 22.5A. The range for setting will be 10~30A.(25*40%=10A and 25*120%=30A)

05-02 Rated Power of Induction Motor 1(kW)

Factory Setting: #.##

Settings 0~655.35 kW

It is used to set rated power of the motor 1. The factory setting is the power of the drive.

05-03 Rated Speed of Induction Motor 1 (rpm)

Factory Setting:

Settings		
	575V：	
	0~1799(60Hz 4 poles)	1710~1755
	0~1499(50Hz 4 poles)	1410~1455
	690V：	
	0~1799(60Hz 4 poles)	1760~1780
	0~1499(50Hz 4 poles)	1460~1480

It is used to set the rated speed of the motor according to the motor nameplate.

Before set up Pr05-04, this parameter must be set.

05-04 Pole Number of Induction Motor 1

Factory Setting: 4

Settings 2~64

It is used to set the number of motor poles (must be an even number).

Set up Pr.05-04 after setting up Pr. 01-01 and Pr.05-03 to make sure motor operate normally.

For example: the Pr05-04 factory setting range is "2~4". If use a 6 poles motor, to set up Pr01-01 and Pr05-03 according the motor nameplate, then the Pr05-04 setting range will become 2~6 automatically.

05-05	No-load Current of Induction Motor 1 (A)

Unit: Amper

Factory Setting: #.##

Settings 0 to the factory setting in Pr.05-01

📖 The factory setting is 40% motor rated current.

📖 For model with 110kW and above, default setting is 20% motor rated current.

05-06	Stator Resistance(Rs) of Induction Motor 1
05-07	Rotor Resistance(Rr) of Induction Motor 1

Factory Setting: #.###

Settings 0~65.535Ω

05-08	Magnetizing Inductance(Lm) of Induction Motor 1
05-09	Stator inductance(Lx) of Induction Motor 1

Factory Setting: #.#

Settings 0~6553.5mH

05-10 ~ 05-12	Reserved

05-13	Full-load Current of Induction Motor 2（A）

Unit: Amper

Factory Setting:#.##

Settings 10~120%

📖 This value should be set according to the rated frequency of the motor as indicated on the motor nameplate. The factory setting is 90% X rated current.

Example: The rated current for 7.5HP (5.5kW) is 25A and factory setting is 22.5A. The range for setting will be 10~30A.(25*40%=10A and 25*120%=30A)

05-14	Rated Power of Induction Motor 2 (kW)

Factory Setting: #.##

Settings 0~655.35 kW

📖 It is used to set rated power of the motor 2. The factory setting is the power of the drive.

05-15	Rated Speed of Induction Motor 2 (rpm)

Factory Setting: 1710

Settings 0~65535

📖 It is used to set the rated speed of the motor according to the motor nameplate.

05-16	Pole Number of Induction Motor 2

Factory Setting: 4

Settings 2~64

- It is used to set the number of motor poles (must be an even number).
- Set up Pr.05-04 after setting up Pr. 01-35 and Pr.05-05 to make sure motor operate normally.

05-17	No-load Current of Induction Motor 2 (A)

Unit: Amper

Factory Setting: #.##

Settings 0 to the factory setting in Pr.05-13

- The factory setting is 40% motor rated current.
- For model with 110kW and above, default setting is 20% motor rated current.

05-18	Stator Resistance (Rs) of Induction Motor 2
05-19	Rotor Resistance (Rr) of Induction Motor 2

Factory Setting: #.###

Settings 0~65.535Ω

05-20	Magnetizing Inductance (Lm) of Induction Motor 2
05-21	Stator Inductance (Lx) of Induction Motor 2

Factory Setting: #.#

Settings 0~6553.5 mH

05-22	Induction Motor 1/ 2 Selection

Factory Setting: 1

Settings 1: Motor 1

2: Motor 2

- It is used to set the motor that driven by the AC motor drive.

05-23	Frequency for Y-connection/△-connection Switch of Induction Motor

Factory Setting: 60.00

Settings 0.00~599.00Hz

05-24	Y-connection/△-connection Switch of Induction Motor IM

Factory Setting: 0

Settings 0: Disable

1: Enable

05-25	Delay Time for Y-connection/△-connection Switch of Induction Motor

Factory Setting: 0.200

Settings 0.000~60.000 sec

- P.05-23 and Pr.05-25 are applied in the wide range motors and the motor coil will execute the switch of Y-connection/Δ-connection as required. (The wide range motors has relation with the motor design. In general, it has higher torque at low speed and Y-connection and it has higher speed at high speed and connection.
- Pr.05-24 is used to enable/disable Y-connection/Δ- connection Switch.
- When Pr.05-24 is set to 1, the drive will select by Pr.05-23 setting and current motor frequency to switch motor to Y-connection or Δ- connection. At the same time, it will also affect motor parameters.

- Pr.05-25 is used to set the switch delay time of Y-connection/Δ- connection.
- When output frequency reaches Y-connection/Δ-connection switch frequency, drive will delay by Pr.05-25 before multi-function output terminals are active.

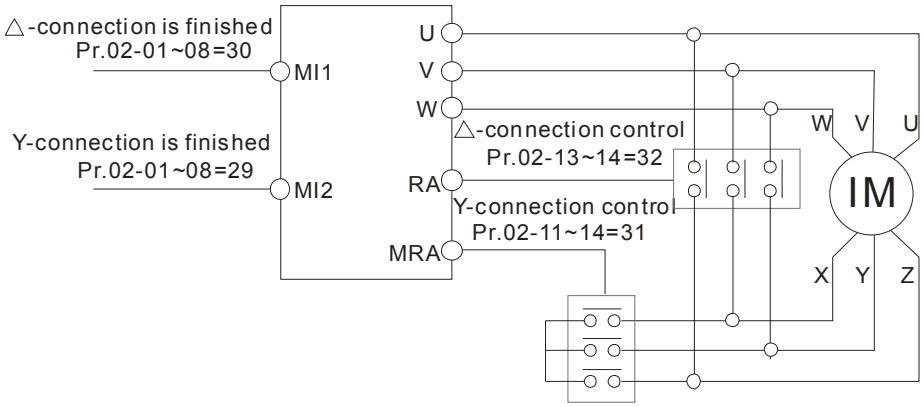

Y- △ connection switch: can be used for wide range motor
Y -connection for low speed: higher torque can be used for rigid tapping
△-connection for high speed: higher torque can be used for high-speed drilling

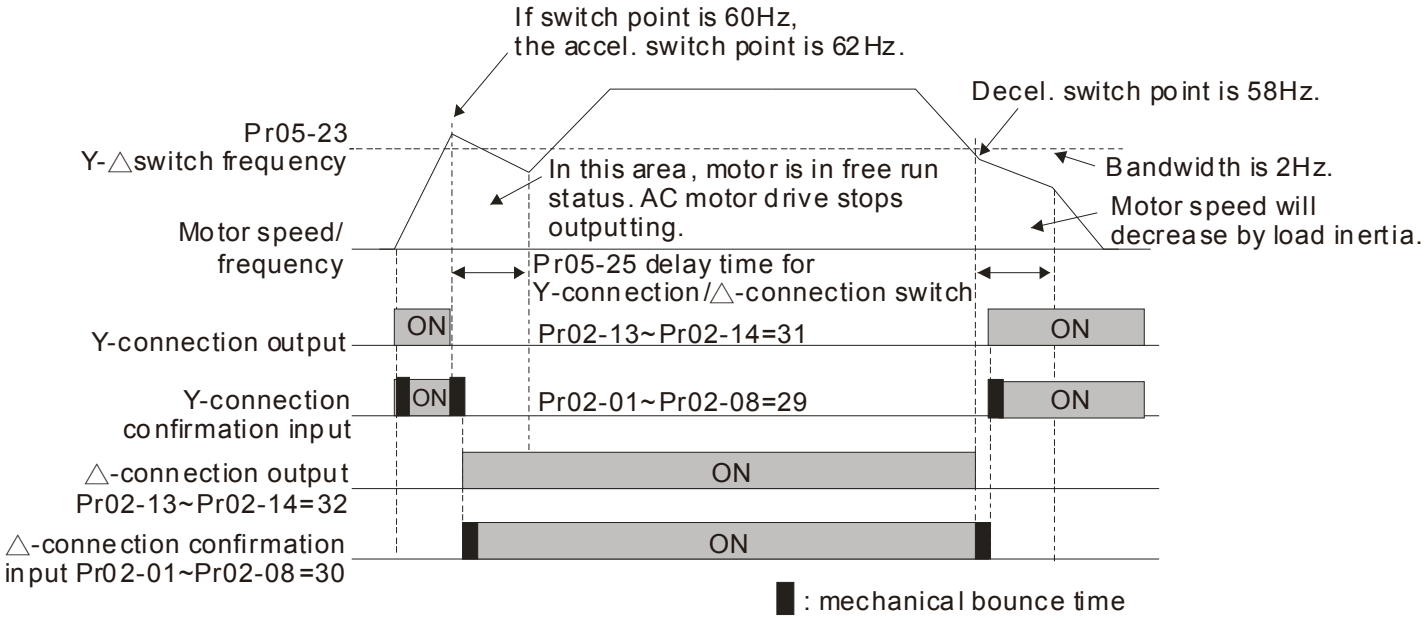

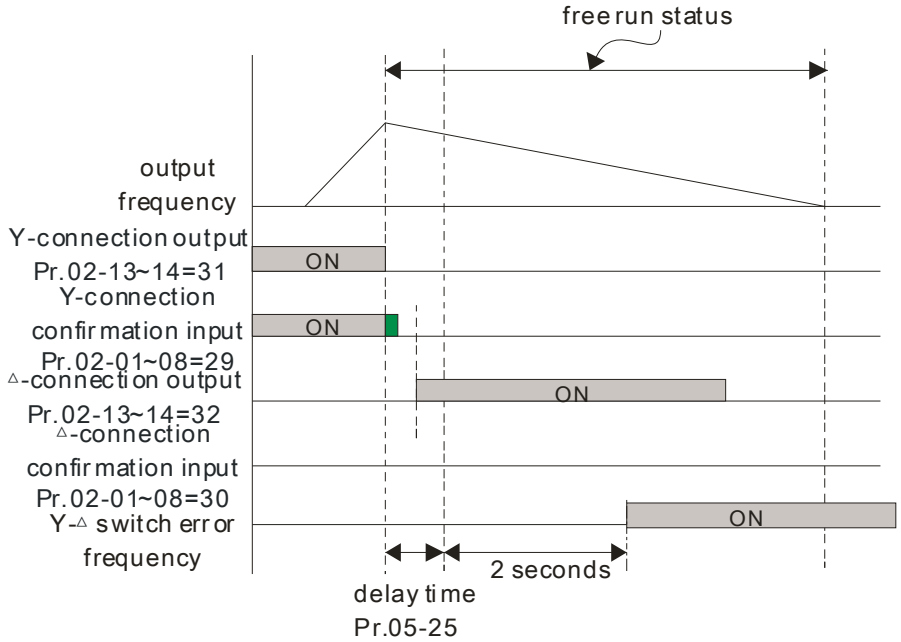

05-26	Accumulative Watt Per Second of Motor in Low Word (W-sec)

Factory Setting: 0.0

Settings Read only

05-27	Accumulative Watt Per Second of Motor in High Word (W-sec)

Factory Setting: 0.0

Settings Read only

05-28	Accumulative Watt-hour of Motor (W-Hour)

Factory Setting: 0.0

Settings Read only

05-29	Accumulative Watt-hour of Motor in Low Word (KW-Hour)

Factory Setting: 0.0

Settings Read only

05-30	Accumulative Watt-hour of Motor in High Word (KW-Hour)

Factory Setting: 0.0

Settings Read only

📖 Pr.05-26~05-29 records the amount of power consumed by motors. The accumulation begins when the drive is activated and record is saved when the drive stops or turns OFF. The amount of consumed watts will continue to accumulate when the drive activate again. To clear the accumulation, set Pr.00-02 to 5 then the accumulation record will return to 0.

05-31	Accumulative Motor Operation Time (Min)

Factory Setting: 0

Settings 00~1439

05-32	Accumulative Motor Operation Time (day)

Factory Setting: 0

Settings 00~65535

📖 Pr. 05-31 and Pr.05-32 are used to record the motor operation time. To clear the operation time, set Pr.05-31 and Pr.05-32 to 00. Operation time shorter than 60 seconds will not be recorded.

05-33	Induction Motor (IM) and Permanent Magnet Motor Selection

Factory Setting:
Read only

Settings 0: Induction Motor
1: Permanent Magnet Motor (SPM)
2: Permanent Magnet Motor (IPM)

05-34	Full-load current of Permanent Magnet Motor

Factory Setting: #.##

Settings 0.00~655.35 Amps

📖 Set this parameter in accord to motor's nameplate. Default setting is 90% motor drive rated current.
For example: 7.5HP（5.5kW） rated current is 25A, then Pr05-34 default is 22.5A
Setting range will be 10~30A (25*10%=2.5A 25*120%=30A)

05-35 Rated Power of Permanent Magnet Motor

Factory Setting: 0.00

Settings 0.00~655.35 kW

Set motor rated power in accord to motor nameplate. Default setting is motor drive rated power.

05-36 Rated speed of Permanent Magnet Motor

Factory Setting: 2000

Settings 0~65535 rpm

05-37 Pole number of Permanent Magnet Motor

Factory Setting: 10

Settings 0~65535

05-38 Inertia of Permanent Magnet Motor

Factory Setting: 0.0

Settings 0.0~6553.5 kg.cm^2 (0.0001kg.m^2)

Default value will follow the chart

Rated Power (kW)	0.4	0.75	1.5	2.2	3.7	5.5	7.5	9.3
Rotor inertia (kg.cm^2)	1.2	3.0	6.6	15.8	25.7	49.6	82.0	121.6

Rated Power (kW)	11	14.1	18.2	27	33	40	46	54
Rotor inertia (kg.cm^2)	177.0	211.0	265.0	308.0	527.0	866.0	1082.0	1267.6

Rated Power (kW)	Above 54
Rotor inertia (kg.cm^2)	1515.0

05-39 Stator Resistance of PM Motor

Factory Setting: 0.000

Settings 0.000~65.535Ω

05-40 Permanent Magnet Motor Ld

Factory Setting: 0.00

Settings 0.00~655.35 mH

05-41 Permanent Magnet Motor Lq

Factory Setting: 0.00

Settings 0.00~655.35 mH

05-42 PG Offset angle of PM Motor

Factory Setting: 0

Settings 0.0~360.0°

When Pr.05-00 is set to 4, the drive will detect offset angle and write into Pr.05-42.

05-43 Ke parameter of PM Motor

Unit: V/1000rpm

Factory Setting: 0

Settings 0~65535

06 Protection Parameters

✓ This parameter can be set during operation.

✓ 06-00 Low Voltage Level

		Factory Setting:
Settings	575V Series: 420.0~520.0Vdc	470.0
	690V Series: 450.0~660.0Vdc	480.0

- This parameter is used to set the Low Voltage level. When the DC BUS voltage is lower than Pr06-00, drive will stop output and free to stop.
- If the drive is triggered LV fault during the operation, drive will stop output and free to stop. There are three LV faults, LvA (LV during acceleration), LvD (LV during deceleration), and LvN (LV in constant speed) which will be triggered in different stage of drive operation. These faults need to be reset manually to restart the drive, while setting restart after momentary power off function (Pr07-06, Pr07-07), the drive will restart automatically.
- If LV is triggered when the drive is in stop status, the fault is named LvS (LV during stop), which will not be recorded, and the drive will restart automatically when input voltage is 100V higher than LV level.

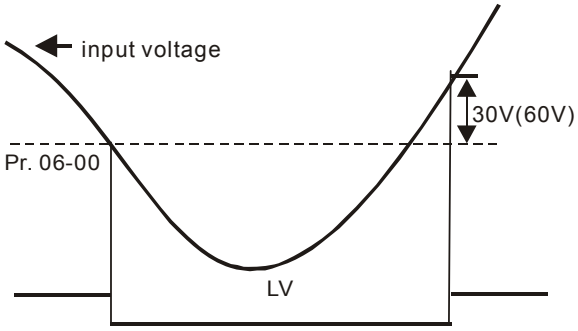

✓ 06-01 Over-voltage Stall Prevention

		Factory Setting:
		920.0/1087.0
Settings	575V Series: 0.0~1116.0V	
	690V Series:0.0~1318.0V	
	0: Disabled	

- When Pr.06-01 is set to 0.0, the over-voltage stall prevention function is disabled. When braking units or resistors are connected to the drive, this setting is suggested.
- When the setting is not 0.0, the over-voltage stall prevention is activated. This setting should refer to power supply system and loading. If the setting is too low, then over-voltage stall prevention will be easily activate, which may increase deceleration time.
- Related parameters: Pr01-13, Pr01-15, Pr01-17, Pr01-19 Decel. Time 1~4, Pr02-13~Pr02-14 Multiple-function output (Relay 1 and 2), Pr02-16~Pr02-17 Multiple-function output (MO1,2), and Pr06-02 selection for over-voltage stall prevention.

06-02 Selection for Over-voltage Stall Prevention

		Factory Setting: 0
Settings	0: Traditional over-voltage stall prevention	
	1: Smart over-voltage prevention	

- This function is used for the occasion that the load inertia is unsure. When it stops in the normal load, the over-voltage won't occur during deceleration and fulfill the setting of deceleration time. Sometimes, it may not stop due to over-voltage during decelerating to stop when increasing the load regenerative inertia. At this moment, the AC drive will auto add the deceleration time until drive stop.
- Pr 06-02 is set to 0: During deceleration, the DC bus voltage may exceed its maximum allowable value due to motor regeneration in some situation, such as loading inertia is too high or Decel. Time is set too short. When traditional over-voltage stall prevention is enabled, the drive will not decelerate further and keep the output frequency constant until the voltage drops below the setting value again.
- When Pr 06-02 is set to 1, the drive will maintain DCbus voltage when decelerating and prevent

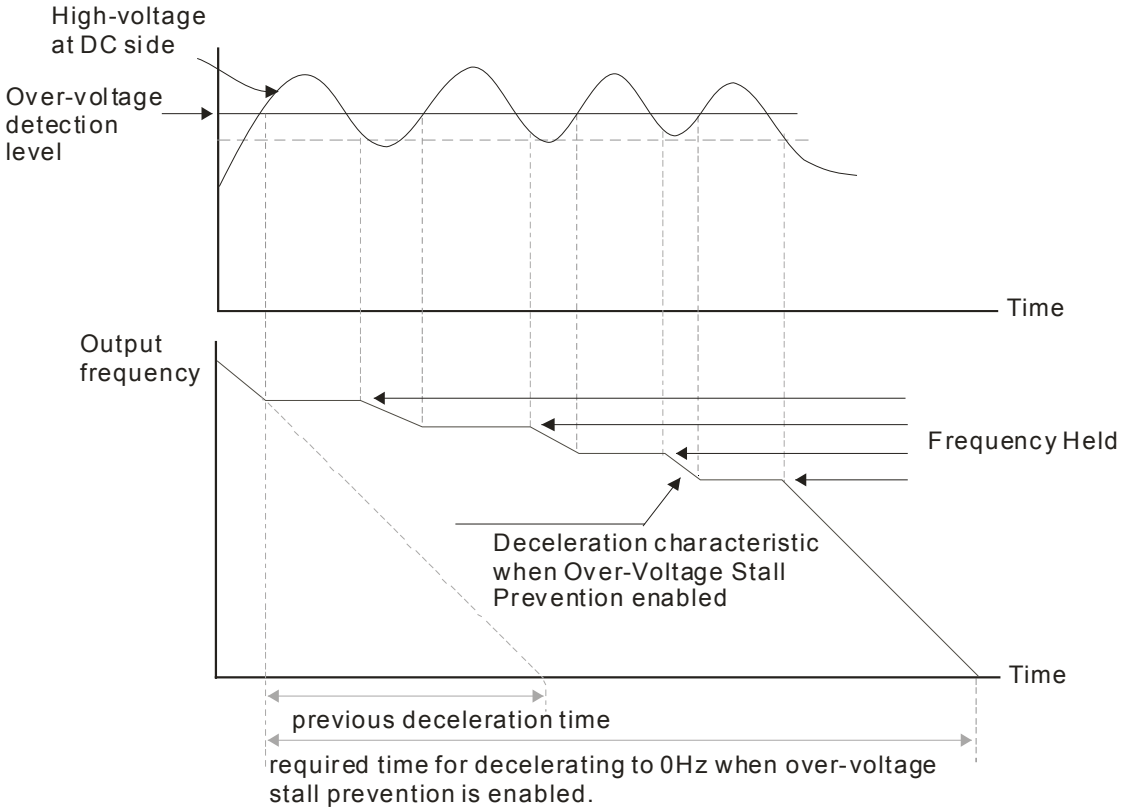

OV.

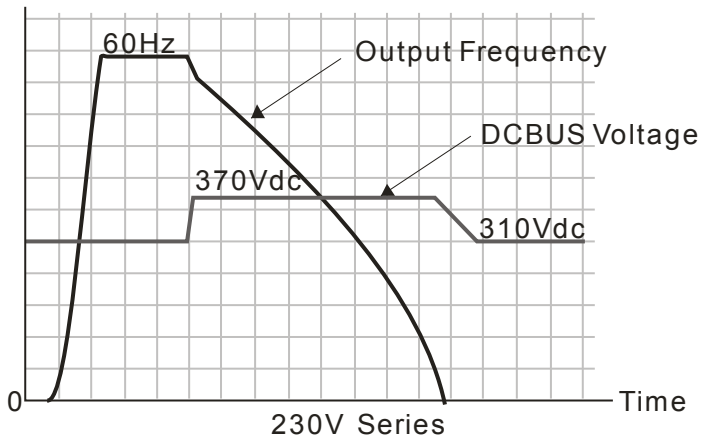

- When the over-voltage stall prevention is enabled, drive deceleration time will be larger than the setting.

- When there is any problem as using deceleration time, refer to the following items to solve it.
  1. Add the suitable deceleration time.
  2. Add brake resistor (refer to Chapter 7-1 for details) to dissipate the electrical energy that regenerated from the motor as heat type.
- Related parameters: Pr01-13, Pr01-15, Pr01-17, Pr01-19 Decel. Time 1~4, Pr02-13~Pr02-14 Multiple-function output (Relay 1 and 2), Pr02-16~Pr02-17 Multiple-function output (MO1,2), and Pr06-01 over-voltage stall prevention.

06-03 Over-current Stall Prevention during Acceleration

Settings	Normal duty: 0~150% (100%: drive's rated current)	Factory Setting: 120
	Heavy duty: 0~180% (100%: drive's rated current)	Factory Setting: 150
	Light duty: 0~120% (100%: drive's rated current)	Factory Setting: 120

- This parameter only works in VF, VFPG, and SVC control mode.
- If the motor load is too large or drive acceleration time is too short, the AC drive output current may increase abruptly during acceleration and it may cause motor damage or trigger protection functions (OL or OC). This parameter is used to prevent this situation.
- During acceleration, the AC drive output current may increase abruptly and exceed the value specified by Pr.06-03 due to rapid acceleration or excessive load on the motor. When this function is enabled, the AC drive will stop accelerating and keep the output frequency constant until the current drops below the maximum value.
- When the over-current stall prevention is enabled, drive acceleration time will be larger than the setting.
- When the Over-Current Stall Prevention occurs due to too small motor capacity or in the factory setting, please decrease Pr.06-03 setting.
- When there is any problem by using acceleration time, refer to the following items to solve it.
- Related parameters: Pr.01-12, 01-14, 01-16, 01-18 (settings of accel. time 1~4), Pr.01-44
  1. dd the suitable acceleration time.
  2. Setting Pr.01-44 Optimal Acceleration/Deceleration Setting to 1, 3 or 4 (auto accel.)
- Optimal Acceleration/Deceleration Setting, Pr.02-13~02-14 (Multi-function Output 1 RY1, RY2), Pr. 02-16~02-17 Multi-function Output (MO1, 2)

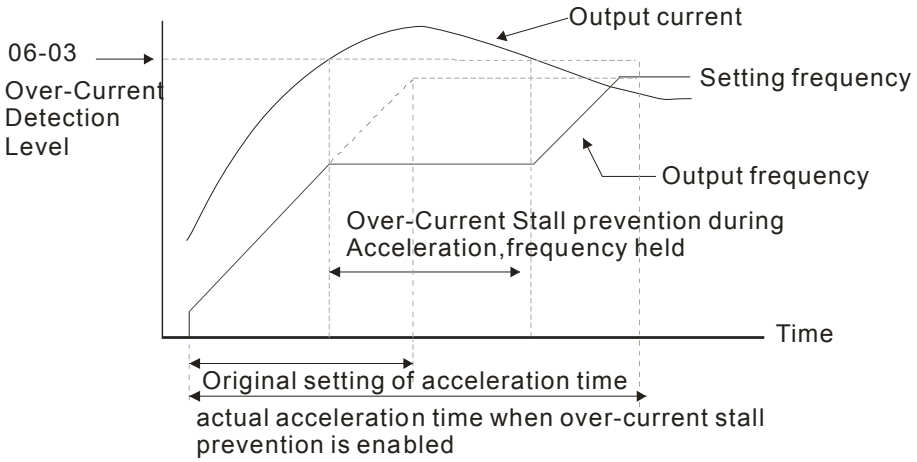

06-04 Over-current Stall Prevention during Operation

Settings	Normal duty: 0~150% (100%: drive's rated current)	Factory Setting: 120
	Heavy duty: 0~180% (100%: drive's rated current)	Factory Setting: 150
	Light duty: 0~120% (100%: drive's rated current)	Factory Setting: 120

- This parameter only works in VF, VFPG, and SVC control mode.
- It is a protection for drive to auto decrease output frequency when the motor is over-load abruptly during motor constant operation.
- If the output current exceeds the setting specified in Pr.06-04 when the drive is operating, the drive will decrease its output frequency (according to Pr.06-05) to prevent the motor stall. If the output current is lower than the setting specified in Pr.06-04, the drive will accelerate (according to Pr.06-05) again to catch up with the set frequency command value.

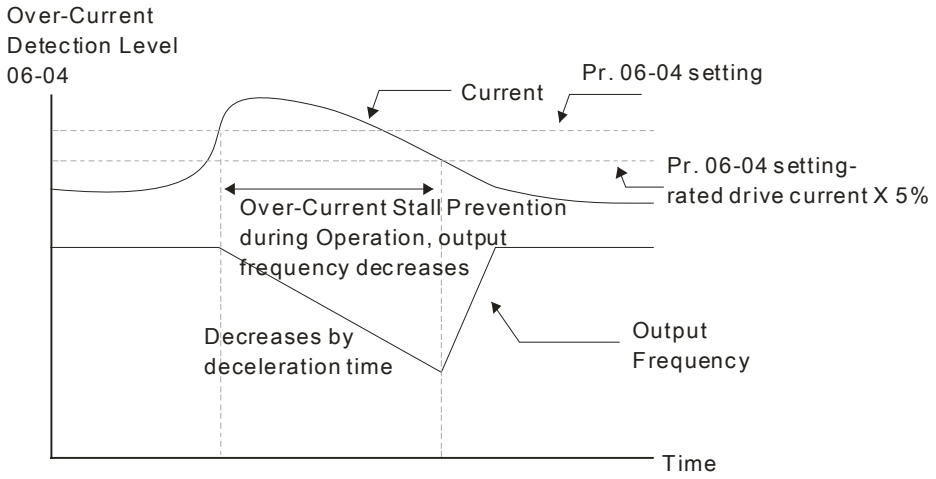

over-current stall prevention during operation

06-05 Accel./Decel. Time Selection of Stall Prevention at Constant Speed

Factory Setting: 0

Settings
0: by current accel/decel time
1: by the 1st accel/decel time
2: by the 2nd accel/decel time
3: by the 3rd accel/decel time
4: by the 4th accel/decel time
5: by auto accel/decel

- It is used to set the accel./decel. time selection when stall prevention occurs at constant speed.

06-06 Over-torque Detection Selection (OT1)

Factory Setting: 0

Settings
0: No function
1: Continue operation after Over-torque detection during constant speed operation
2: Stop after Over-torque detection during constant speed operation
3: Continue operation after Over-torque detection during RUN
4: Stop after Over-torque detection during RUN

06-09 Over-torque Detection Selection (OT2)

Factory Setting: 0

Settings 0: No function

1: Continue operation after Over-torque detection during constant speed operation

2: Stop after Over-torque detection during constant speed operation

3: Continue operation after Over-torque detection during RUN

4: Stop after Over-torque detection during RUN

When Pr.06-06 and Pr.06-09 are set to 1 or 3, it will display a warning message and won't have an abnormal record.

When Pr.06-06 and Pr.06-09 are set to 2 or 4, it will display a warning message and will have an abnormal record.

06-07 Over-torque Detection Level (OT1)

Factory Setting: 120

Settings 10 to 250% (100%: drive's rated current)

06-08 Over-torque Detection Level (OT1)

Factory Setting: 0.1

Settings 0.0~60.0 sec

06-10 Over-torque Detection Level (OT2)

Factory Setting: 120

Settings 10 to 250% (100%: drive's rated current)

06-11 Over-torque Detection Time (OT2)

Factory Setting: 0.1

Settings 0.0~60.0 sec

When the output current exceeds the over-torque detection level (Pr06-07 or Pr06-10) and also exceeds Pr06-08 or Pr06-11, the over torque detection will follow the setting of Pr06-06 and Pr06-09.

When Pr06-06 or Pr06-09 is set to 1 or 3, the motor drive will have the ot1/ot2 warning after Over Torque Detection, while the motor drive will keep running. The warning will be off only until the output current is smaller than the 5% of the over-torque detection level (Pr06-07 and Pr06-10).

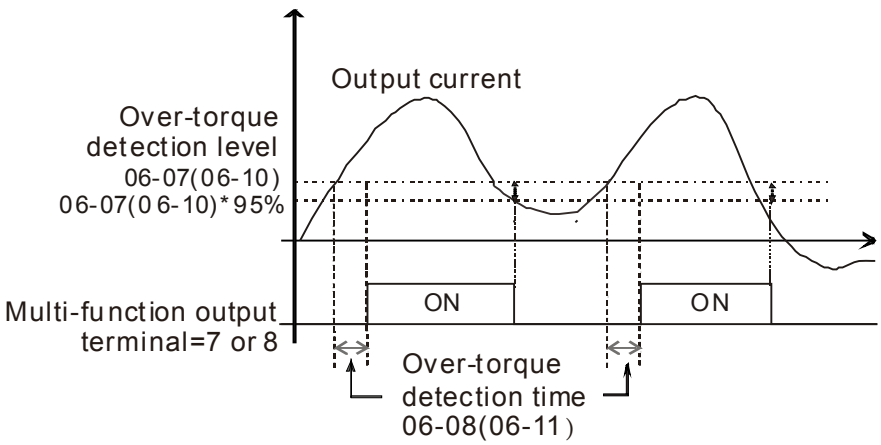

📖 When Pr06-06 or Pr06-09 is set to 2 or 4, the motor drive will have the ot1/ot2 fault after Over Torque Detection. Then the motor drive stop running until it is manually reset.

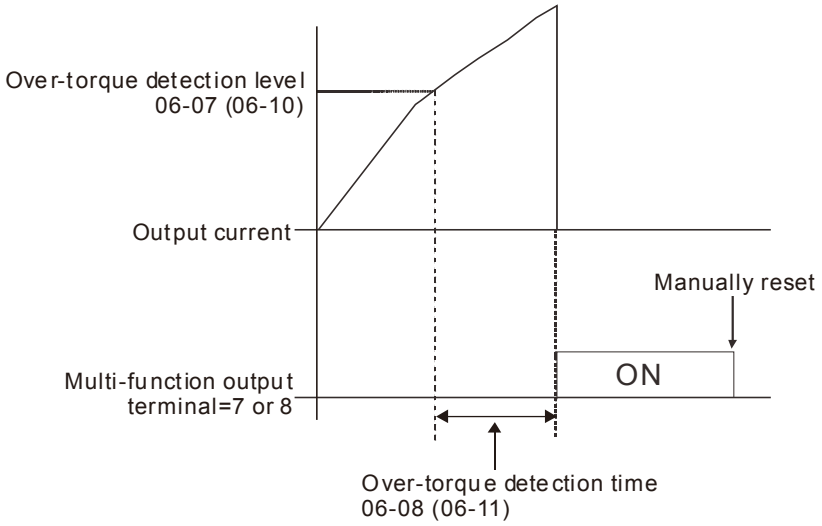

06-12 Current Limit

Factory Setting: 170

Settings 0~250% (100%: drive's rated current)

📖 Pr.06-12 sets the maximum output current of the drive. Pr.06-12 and Pr.11-17 ~ Pr.11-20 are used to set the drive's output current limit. When the drive is in VF, SVC or VFPG control mode, output frequency will decreases as the output current reaches current limit. It acts as current stall prevention.

06-13 Electronic Thermal Relay Selection (Motor 1)
06-27 Electronic Thermal Relay Selection (Motor 2)

Factory Setting: 2

Settings 0: Inverter motor (with external forced cooling)
1: Standard motor (so motor with fan on the shaft)
2: Disable

📖 It is used to prevent self-cooled motor overheats under low speed. User can use electronic thermal relay to limit driver's output power.

📖 Setting as 0 is suitable for special motor (motor fan using independent power supply). For this kind of motor, the cooling capacity is not related to motor speed obviously. So the action of electronic thermal relay will remain stable in low speed, which can ensure the motor's load capability in low speed.

📖 Setting as 1 is suitable for standard motor (motor fan is fixed on the rotor shaft). For this kind of motor, the cooling capacity is low in low speed, and the action of electronic thermal relay will reduce the action time, which ensure the life of motor.

📖 When the power ON/OFF is often switched, even setting as 0 or 1 can bot protect the motor well. It is because when the power is switched off, the electronic thermal relay protection will be reset. If there are several motors connected to one motor drive, please install electronic thermal relay in each motor respectively.

06-14 Electronic Thermal Characteristic for Motor 1
06-28 Electronic Thermal Characteristic for Motor 2

Factory Setting: 60.0

Settings 30.0~600.0 sec

The parameter is set by the 150% of motor rated current and the setting of Pr.06-14 and Pr.06-28 to prevent the motor damaged from overheating. When it reaches the setting, it will display "EoL1/EoL2" and the motor will be in free running.

This parameter is to set the action time of electronic thermal relay. It works based on the I2t characteristic curve of electronic thermal relay, output frequency and current of motor drive, and operation time to prevent motor from over-heat.

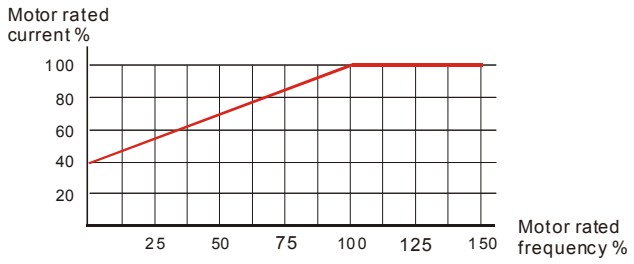

Motor cooling curve with shaft-fixed fan

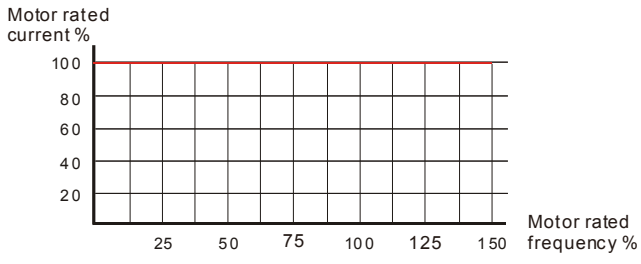

Motor cooling curve with independent fan

The action of electronic thermal relay depends on the setting of Pr06-13/Pr06-27.

1. 06-13 or 06-27 is set 0 (using special motor)：
   When output current of motor drive is higher than 150% of motor current (refer to motor cooling curve with independent fan), motor drive will start to count the time. When the accumulated time exceeds Pr06-14 or 06-28, electronic thermal relay will act.
2. 06-13 or 06-27 is set 0 (using standard motor)：
   When output current of motor drive is higher than 150% of motor current (refer to motor cooling curve with shaft-fixed fan), motor drive will start to count the time. When the accumulated time exceeds Pr06-14 or 06-28, electronic thermal relay will act.
   The real electronic thermal relay action time will adjust with drive output current (shown as motor loading rate). When the current is high, the action time is short; when the current is high, the action time is short. Please refer to following chart:

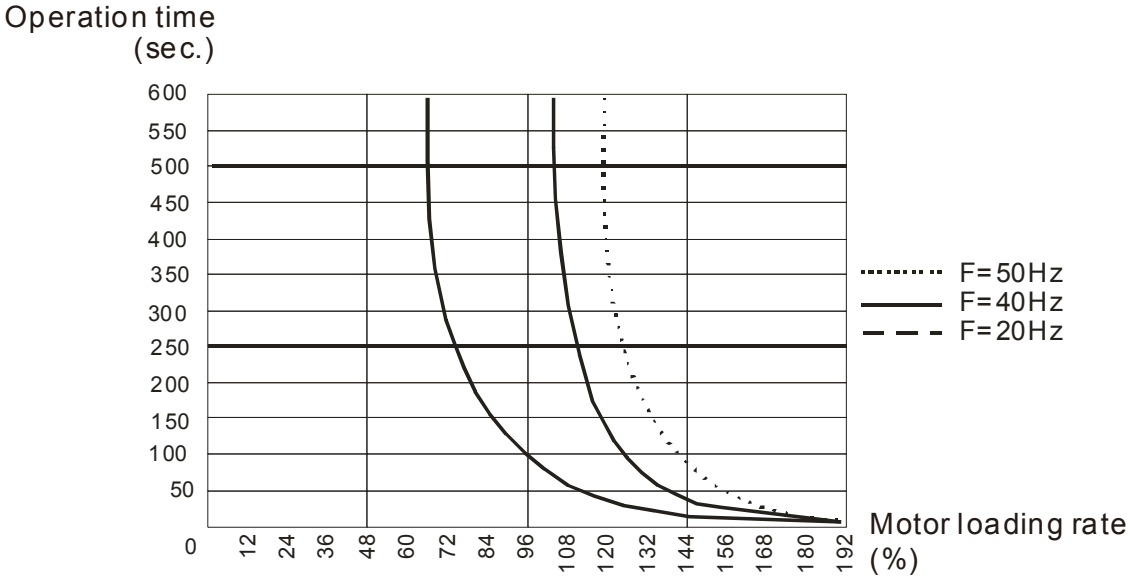

06-15 Heat Sink Over-heat (OH) Warning

Factory Setting: 105.0
50HP and below: 90.0

Settings 0.0~110.0℃

- When using heavy duty or advanced control mode, the OH warning will be disabled if Pr06-15 remains as default. When the temperature reaches 100℃, motor drive will stop with IGBT over-heat fault.
- When using normal duty or general control mode, the OH warning will be disabled if Pr06-15 is set to 110℃. When the temperature reaches 110℃, motor drive will stop with IGBT over-heat fault.

06-16 Stall Prevention Limit Level (Flux weakening area current stall prevention level)

Factory Setting: 50

Settings 0~100% (Refer to Pr.06-03, Pr.06-04)

- When operation frequency is larger than Pr.01-01; e.g. Pr06-03=150%, Pr. 06-04=100% and Pr. 06-16=80%:
  Calculate the Stall Prevention Level during acceleration: Pr.06-03 * Pr.06-16=150x80%=120%.
  Calculate the Stall Prevention Level at constant speed: Pr.06-04 * Pr.06-16=100x80%=80%.

06-17 Fault Record 1 (Present Fault Record)
06-18 Fault Record 2
06-19 Fault Record 3
06-20 Fault Record 4
06-21 Fault Record 5
06-22 Fault Record 6

Settings

0: No fault record
1: Over-current during acceleration (ocA)
2: Over-current during deceleration (ocd)
3: Over-current during constant speed(ocn)
4: Ground fault (GFF)
5: IGBT short-circuit (occ)
6: Over-current at stop (ocS)
7: Over-voltage during acceleration (ovA)
8: Over-voltage during deceleration (ovd)
9: Over-voltage during constant speed (ovn)
10: Over-voltage at stop (ovS)
11: Low-voltage during acceleration (LvA)
12: Low-voltage during deceleration (Lvd)
13: Low-voltage during constant speed (Lvn)
14: Stop mid-low voltage (LvS)
15: Phase loss protection (OrP)

16: IGBT over-heat (oH1)
17: Capacitance over-heat (oH2) (for 40hp above)
18: tH1o (TH1 open: IGBT over-heat protection error)
19: tH2o (TH2 open: capacitance over-heat protection error)
20: Reserved
21: Drive over-load (oL)
22: Electronics thermal relay 1 (EoL1)
23: Electronics thermal relay 2 (EoL2)
24: Motor PTC overheat (oH3) (PTC/PT100)
25: Reserved
26: Over-torque 1 (ot1)
27: Over-torque 2 (ot2)
28: Low current (uC)
29: Home limit error (LMIT)
30: Memory write-in error (cF1)
31: Memory read-out error (cF2)
32: Reserved
33: U-phase current detection error (cd1)
34: V-phase current detection error (cd2)
35: W-phase current detection error (cd3)
36: Clamp current detection error (Hd0)
37: Over-current detection error (Hd1)
38: Over-voltage detection error (Hd2)
39: occ IGBT short circuit detection error (Hd3)
40: Auto tuning error (AUE)
41: PID feedback loss (AFE)
42: PG feedback error (PGF1)
43: PG feedback loss (PGF2)
44: PG feedback stall (PGF3)
45: PG slip error (PGF4)
46: Reserved
47: Reserved
48: Analog current input loss (ACE)
49: External fault input (EF)
50: Emergency stop (EF1)
51: External Base Block (bb)
52: Password error (PcodE)
53: Reserved
54: Communication error (CE1)
55: Communication error (CE2)
56: Communication error (CE3)
57: Communication error (CE4)

58: Communication Time-out (CE10)
59: Reserved
60: Brake transistor error (bF)
61: Y-connection/△-connection switch error (ydc)
62: Decel. Energy Backup Error (dEb)
63: Slip error (oSL)
64: Electromagnet switch error (ryF)
65: PG Card Error (PGF5)
66~67: Reserved
68: Sensorless estimated speed have wrong direction
69: Sensorless estimated speed is over speed
70: Sensorless estimated speed deviated
71: Reserved
72: STO Loss 1
73: External safety gate S1
74~75: Reserved
76: STO
77: STO Loss 2
78: STO Loss 3
79~81: Reserved
82: OPHL U phase output phase loss
83: OPHL Vphase output phase loss
84: OPHL Wphase output phase loss
85: PG-02U ABZ hardware disconnection
86: PG-02U UVW hardware disconnection
87: oL3
88: Reserved
89: Initial rotor position detection error
90: Inner PLC function is forced to stop
91~100: Reserved
101: CGdE CANopen software disconnect1
102: CHbE CANopen software disconnect2
103: Reserved
104: CbFE CANopen hardware disconnect
105: CIdE CANopen index setting error
106: CAdE CANopen slave station number setting error
107: CFrE CANopen index setting exceed limit
108~110: Reserved
111: InrCOM Internal communication overtime error
112: PM sensorless shaft Lock error
113: Reserved

📖 When the fault occurs and force stopping, it will record in this parameter.

- At stop with low voltage Lv (LvS warn, no record). During operation with mid-low voltage Lv (LvA, Lvd, Lvn error, will record).
- Setting 62: when dEb function is enabled, the drive will execute dEb and record to the Pr.06-17 to Pr.06-22 simultaneously.

06-23	Fault Output Option 1
06-24	Fault Output Option 2
06-25	Fault Output Option 3
06-26	Fault Output Option 4

Factory Setting: 0

Settings 0 to 65535 sec (refer to bit table for fault code)

- These parameters can be used with multi-function output (set to 35-38) for the specific requirement. When the fault occurs, the corresponding terminals will be activated (It needs to convert binary value to decimal value to fill in Pr.06-23 to Pr.06-26).

Fault Code	Bit0	Bit1	Bit2	Bit3	Bit4	Bit5	Bit6
	current	Volt.	OL	SYS	FBK	EXI	CE
0: No fault							
1: Over-current during acceleration (ocA)	●						
2: Over-current during deceleration (ocd)	●						
3: Over-current during constant speed(ocn)	●						
4: Ground fault (GFF)	●						
5: IGBT short-circuit (occ)	●						
6: Over-current at stop (ocS)	●						
7: Over-voltage during acceleration (ovA)		●					
8: Over-voltage during deceleration (ovd)		●					
9: Over-voltage during constant speed (ovn)		●					
10: Over-voltage at stop (ovS)		●					
11: Low-voltage during acceleration (LvA)		●					
12: Low-voltage during deceleration (Lvd)		●					
13: Low-voltage during constant speed (Lvn)		●					
14: Stop mid-low voltage (LvS)		●					
15: Phase loss protection (OrP)		●					
16: IGBT over-heat (oH1)			●				
17: Capacitance over-heat (oH2)			●				
18: tH1o (TH1 open)			●				
19: tH2o (TH2 open)			●				
20: Reserved							
21: Drive over-load (oL)			●				
22: Electronics thermal relay 1 (EoL1)			●				
23: Electronics thermal relay 2 (EoL2)			●				
24: Motor PTC overheat (oH3) (PTC)			●				
25: Reserved							
26: Over-torque 1 (ot1)			●				
27: Over-torque 2 (ot2)			●				
28: Low current (uC)	●						
29: Home limit error (LMIT)						●	

Fault Code	Bit0	Bit1	Bit2	Bit3	Bit4	Bit5	Bit6
	current	Volt.	OL	SYS	FBK	EXI	CE
30: Memory write-in error (cF1)				●			
31: Memory read-out error (cF2)				●			
32: Reserved							
33: U-phase current detection error (cd1)				●			
34: V-phase current detection error (cd2)				●			
35: W-phase current detection error (cd3)				●			
36: Clamp current detection error (Hd0)				●			
37: Over-current detection error (Hd1)				●			
38: Over-voltage detection error (Hd2)				●			
39: occ IGBT short circuit detection error (Hd3)				●			
40: Auto tuning error (AUE)				●			
41: PID feedback loss (AFE)					●		
42: PG feedback error (PGF1)					●		
43: PG feedback loss (PGF2)					●		
44: PG feedback stall (PGF3)					●		
45: PG slip error (PGF4)					●		
46: PG ref loss (PGr1)					●		
47: PG ref loss (PGr2)					●		
48: Analog current input loss (ACE)					●		
49: External fault input (EF)						●	
50: Emergency stop (EF1)						●	
51: External Base Block (bb)						●	
52: Password error (PcodE)				●			
53: Reserved							
54: Communication error (CE1)							●
55: Communication error (CE2)							●
56: Communication error (CE3)							●
57: Communication error (CE4)							●
58: Communication Time-out (CE10)							●
59: PU Time-out (CP10)							●
60: Brake transistor error (bF)						●	
61: Y-connection/△-connection switch error (ydc)						●	
62: Decel. Energy Backup Error (dEb)		●					
63: Slip error (oSL)						●	
64: Electromagnet switch error (ryF)						●	
65 : PG Card Error (PGF5)						●	
66~67: Reserved							
68: Sensorless estimated speed have wrong direction							
69: Sensorless estimated speed is over speed							
70: Sensorless estimated speed deviated							
71: Reserved							
72: STO Loss 1				●			
73: External safety gate S1				●			
74~75: Reserved							

Fault Code	Bit0	Bit1	Bit2	Bit3	Bit4	Bit5	Bit6
	current	Volt.	OL	SYS	FBK	EXI	CE
76: STO				●			
77: STO Loss 2				●			
78: STO Loss 3				●			
79: U phase over current (Uocc)	●						
80: V phase over current (Vocc)	●						
81: W phase over current (Wocc)	●						
82: OPHL U phase output phase loss	●						
83: OPHL Vphase output phase loss	●						
84: OPHL Wphase output phase loss	●						
85: PG-02U ABZ hardware disconnection					●		
86: PG-02U UVW hardware disconnection					●		
87: oL3							
88: Reserved							
89: Initial rotor position detection error							
90: Inner PLC function is forced to stop							
91~100: Reserved							
101: CGdE CANopen software disconnect1							●
102: CHbE CANopen software disconnect2							●
103: Reserved							
104: CbFE CANopen hardware disconnect							●
105: CIdE CANopen index setting error							●
106: CAdE CANopen slave station number setting error							●
107: CFrE CANopen index setting exceed limit							●
108~110: Reserved							
111: InrCOM Internal communication overtime error							●
112: PM sensorless shaft Lock error							
113: Reserved							

06-29 PTC (Positive Temperature Coefficient) Detection Selection

Factory Setting: 0

Settings 0: Warn and keep operating
1: Warn and ramp to stop
2: Warn and coast to stop
3: No warning

Pr.06-29 setting defines how the will drive operate after PTC detection.

06-30 PTC Level

Factory Setting: 50.0

Settings 0.0~100.0%

It needs to set AVI/ACI/AUI analog input function Pr.03-00~03-02 to 6 (P.T.C. thermistor input value).

It is used to set the PTC level, and the corresponding value for 100% is max. analog input value.

06-31 Frequency Command for Malfunction

Factory Setting: Read only

Settings 0.00~599.00Hz

📖 When malfunction occurs, use can check the frequency command. If it happens again, it will overwrite the previous record.

06-32 Output Frequency at Malfunction

Factory Setting: Read only

Settings 0.00~599.00Hz

📖 When malfunction occurs, use can check the current frequency command. If it happens again, it will overwrite the previous record.

06-33 Output Voltage at Malfunction

Factory Setting: Read only

Settings 0.0~6553.5V

📖 When malfunction occurs, user can check current output voltage. If it happens again, it will overwrite the previous record.

06-34 DC Voltage at Malfunction

Factory Setting: Read only

Settings 0.0~6553.5V

📖 When malfunction occurs, user can check the current DC voltage. If it happens again, it will overwrite the previous record.

06-35 Output Current at Malfunction

Factory Setting: Read only

Settings 0.0~6553.5Amp

📖 When malfunction occurs, user can check the current output current. If it happens again, it will overwrite the previous record.

06-36 IGBT Temperature at Malfunction

Factory Setting: Read only

Settings 0.0~6553.5℃

📖 When malfunction occurs, user can check the current IGBT temperature. If it happens again, it will overwrite the previous record.

06-37 Capacitance Temperature at Malfunction

Factory Setting: Read only

Settings -3276.7~3276.7℃

📖 When malfunction occurs, user can check the current capacitance temperature. If it happens again, it will overwrite the previous record.

06-38 Motor Speed in rpm at Malfunction

Factory Setting: Read only

Settings -32767~32767 rpm

When malfunction occurs, user can check the current motor speed in rpm. If it happens again, it will overwrite the previous record.

06-39 Torque Command at Malfunction

Factory Setting: Read only

Settings -3276.7~3276.7%

When malfunction occurs, user can check the current torque command. If it happens again, it will overwrite the previous record.

06-40 Status of Multi-function Input Terminal at Malfunction

Factory Setting: Read only

Settings 0000h~FFFFh

06-41 Status of Multi-function Output Terminal at Malfunction

Factory Setting: Read only

Settings 0000h~FFFFh

When malfunction occurs, user can check the status of multi-function input/output terminals. If it happens again, it will overwrite the previous record.

06-42 Drive Status at Malfunction

Factory Setting: Read only

Settings 0000H~FFFFh

When malfunction occurs, please check the drive status (communication address 2119H). If malfunction happens again, the previous record will be overwritten by this parameter.

06-43 Reserved

06-44 STO Alarm Latch

Factory Setting: 0

Settings 0: STO alarm Latch
1: STO alarm no Latch

Pr06-44=0 STO Alarm Latch: after the reason of STO Alarm is cleared, a Reset command is need to clear STO Alarm.

Pr06-44=1 STO Alarm no Latch: after the reason of STO Alarm is cleared, the STO Alarm will be cleared automatically.

All of STL1~STL3 error are “Alarm latch” mode (in STL1~STL3 mode, the Pr06-44 function is no effective).

06-45 Treatment to Output Phase Loss (OPHL)

Factory Setting: 3

Settings 0: Warn and keep operating
1: Warn and ramp to stop
2: Warn and coast to stop
3: No warning

The OPHL protect will be active when the setting is not 3.

06-46 Deceleration Time of Output Phase Loss

Factory Setting:0.500

Settings 0.000~65.535 sec

06-47 Current detection level of output phase loss

Factory Setting:1.00

Settings 0.00~100.00%

06-48 Output phase loss detection function executing time before run

Factory Setting:0.000

Settings 0.000~65.535 sec

When Pr06-48 is 0, OPHL detection function will be disabled in the stage of DC braking before run

Status 1：Motor drive is in operation
Any phase is less than Pr06-47 setting level, and exceeds Pr06-46 setting time, motor drive will perform Pr06-45 setting.

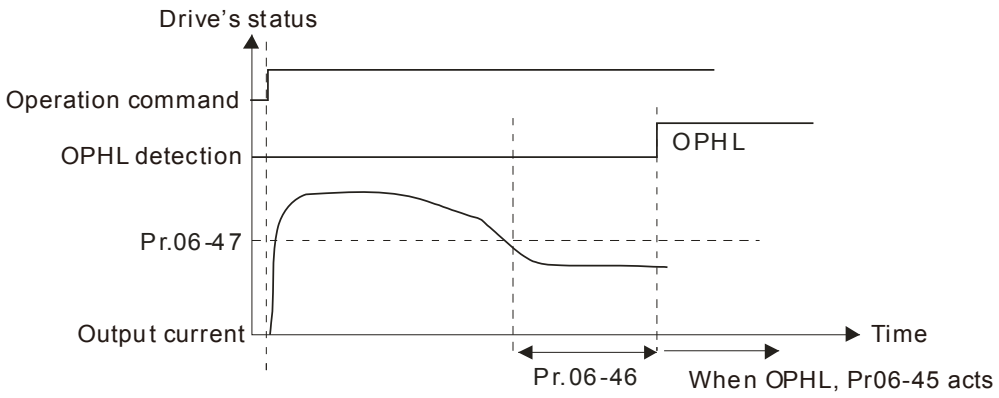

Status 2：Motor drive is in stop; Pr06-48=0 ; Pr07-02≠0

After motor drive starts, DC brake will be applied in accord to Pr07-01 and Pr07-02. During this period, OPHL detection will not be conducted. After DC brake, motor drive starts to run, and conducts the OPHL protection as mentioned in status 1.

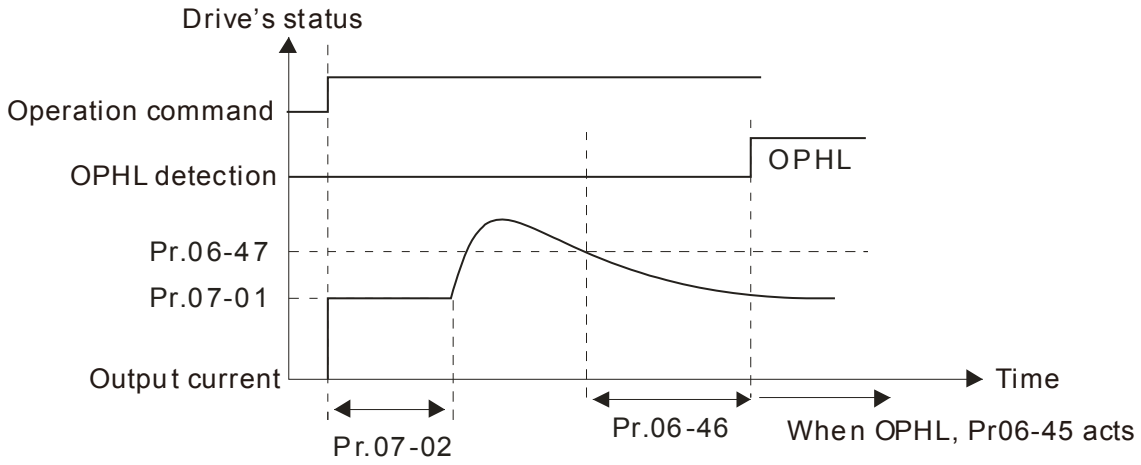

Status 3: Motor drive is in stop; Pr06-48≠0 ; Pr07-02≠0

When motor drive starts, it will perform Pr06-48 and then Pr07-02 (DC brake). DC brake current level in this status includes two parts, one is 20 times of Pr06-47 setting value in Pr06-48 setting time, and Pr07-02 setting value in Pr07-01 setting time. Total DC brake time is T=Pr06-48+Pr07-02.

In this period, if OPHL happens, motor drive starts to count until Pr06-48/2, motor drive will perform Pr06-45 setting.

Status 3-1: Pr06-48≠0, Pr07-02≠0 (No OPHL detected before operation)

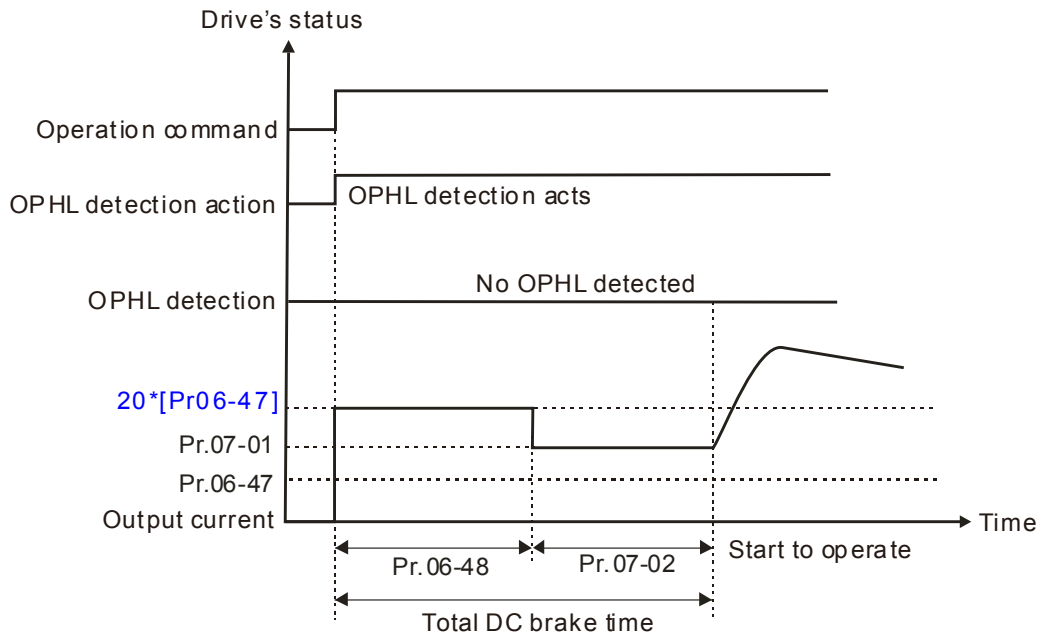

Status 3-2: Pr06-48≠0, Pr07-02≠0 (OPHL detected before operation)

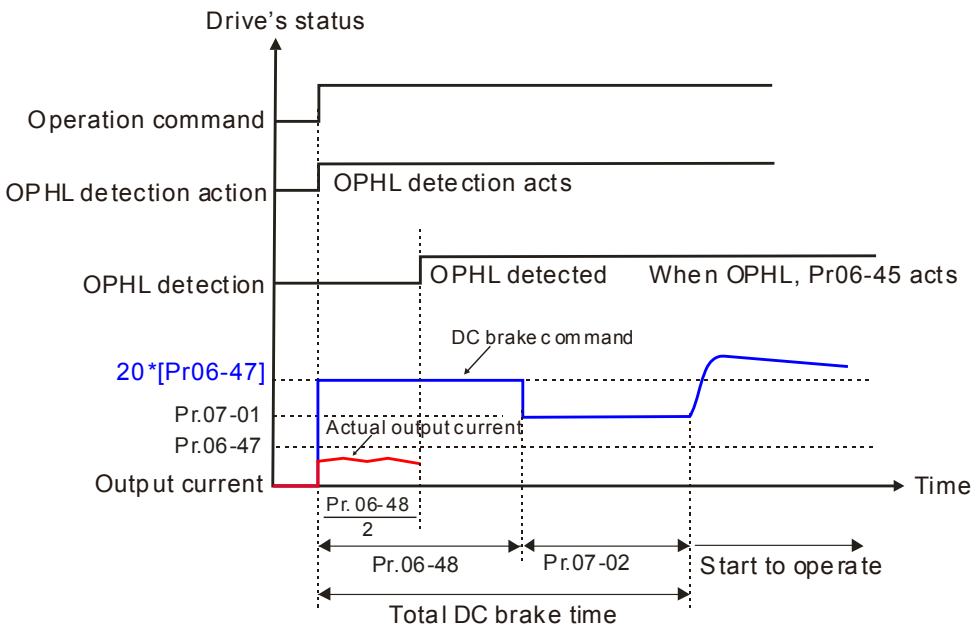

Status 4: Motor drive is in stop; Pr06-48≠0 ; Pr07-02=0

When motor drive starts, it will perform Pr06-48 as DC brake. The DC brake current level is 20 times of Pr06-47 setting value. In this period, if OPHL happens, motor drive starts to count until Pr06-48/2, motor drive will perform Pr06-45 setting.

Status 4-1: Pr06-48≠0, Pr07-02=0 (No OPHL detected before operation)

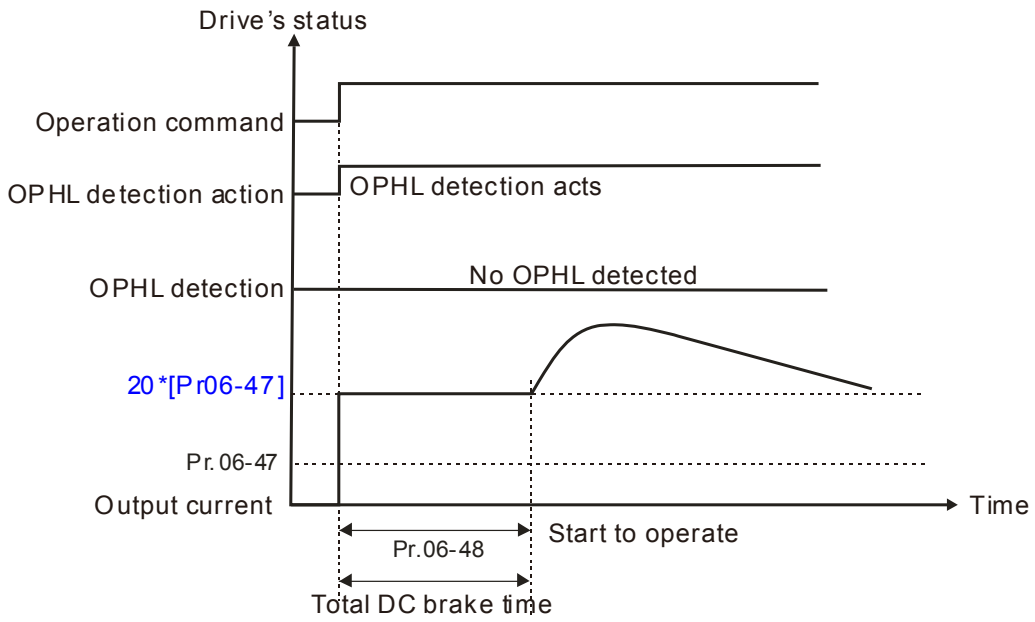

Status 4-2: Pr06-48≠0, Pr07-02=0 (OPHL detected before operation)

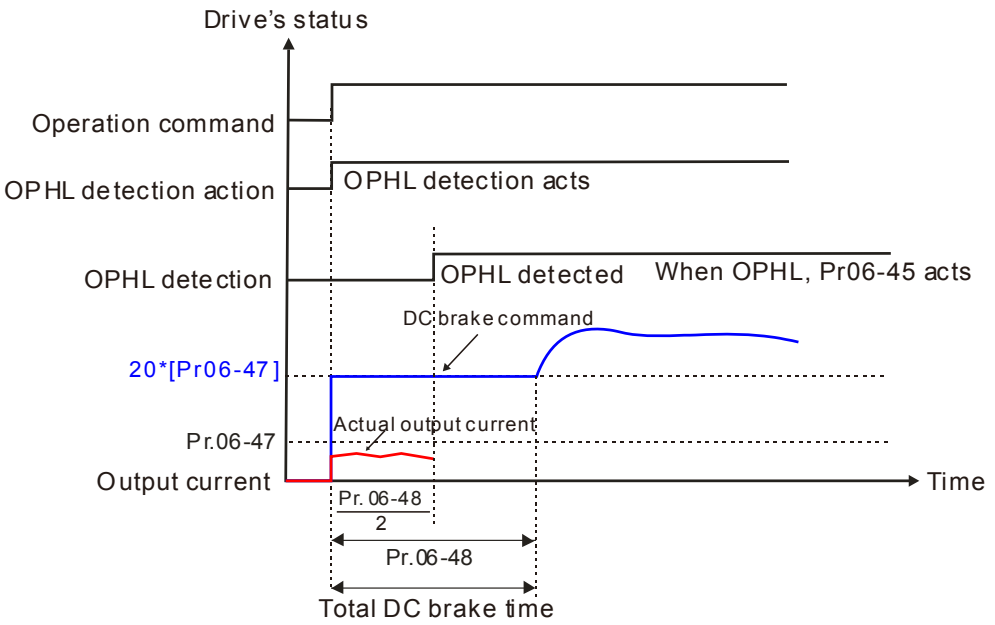

06-49 LvX Auto Reset

Factory Setting: 0

Settings 0: Disable

1: Enable

06-50 Time for Input Phase Loss Detection

Factory Setting:0.20

Settings 0.00~600.00 sec

06-51 Reserved

06-52 Ripple of Input Phase Loss

Factory Setting: 75.0 / 90.0

Settings 575V Series: 0.0~400.0 Vdc

690V Series: 0.0~480.0 Vdc

- When the DC BUS ripple is higher than Pr06-52, and continue Pr06-50 plus 30 seconds, drive will trip up ORP and act depending on the setting of Pr06-53 to stop.
- In the time period Pr06-50 plus 30 seconds, if the DC BUS ripple is lower than Pr06-52, the ORP protection counter will be restart.
- If the drive is installed in the power system with high harmonic, the drive will trigger ORP warning based on the protection rule to avoid damage. If the ORP is triggered, user can check if the power system is abnormal or the wiring mistakes

06-53 Treatment for the detected Input Phase Loss （OrP）

Factory Setting: 0

Settings 0: warn, ramp to stop

1: warn, coast to stop

- Over ripple protection
- When the DC BUS ripple is bigger than protection level, drive will trip up OrP and depending on how the parameter 06-53 is set to stop.

06-54	Reserved
06-55	Derating Protection

Factory Setting: 0

Settings 0: constant rated current and limit carrier wave by load current and temperature

1: constant carrier frequency and limit load current by setting carrier wave

2: constant rated current(same as setting 0), but close current limit

📖 Setting 0:

When the rated current is constant, carrier frequency (Fc) output by motor drive will auto decrease according to surrounding temperature, overload output current and time. If overload situation is not frequent and only cares the carrier frequency operated with the rated current for a long time and carrier wave changes during short overload, it is recommended to set to 0.

Refer to the following diagram for the level of carrier frequency. Take VFD220C63B in normal duty as example, surrounding temperature 50℃ with independent installation and UL open-type. When the carrier frequency is set to 9kHz, it corresponds to 75% rated output current. When it outputs higher than the value, it will auto decrease the carrier frequency. If the output is 83% rated current and the carrier frequency will decrease to 8kHz. In addition, it will also decrease the carrier frequency when overload. When the carrier frequency is 9kHz and the current is 120%*75%=90% for a minute, the carrier frequency will decrease to the factory setting.

📖 Setting 1:

It is used for the fixed carrier frequency and prevents the carrier wave changes and motor noise caused by the surrounding temperature and frequent overload.

Refer to the following for the derating level of rated current. Take VFD220C63B in normal duty as example, when the carrier frequency keeps in 9kHz and the rated current is decreased to 75%, it will have OL protection when the current is 120%*75%=90% for a minute. Therefore, it needs to operate by the curve to keep the carrier frequency.

📖 Setting 2:

It sets the protection method and action to 0 and disables the current limit for the Ratio*160% of output current in the normal duty and Ratio*180% of output current in the heavy duty. The advantage is that it can provide higher output current when the setting is higher than the factory setting of carrier frequency. The disadvantage is that it decreases carrier wave easily when overload.

📖 It should be used with Pr. 00-16 and Pr.00-17 for setting.

📖 Ambient temperature will also affect the derating, please refer to ambient temperature derating curve.

Derating Curve (VF, VF+PG, SVC, FOC+PG)
Setting 1
Setting 0 or 2
(50°C：UL Open Type)
(40°C：UL Type 1 or Open Type-Side by Side)

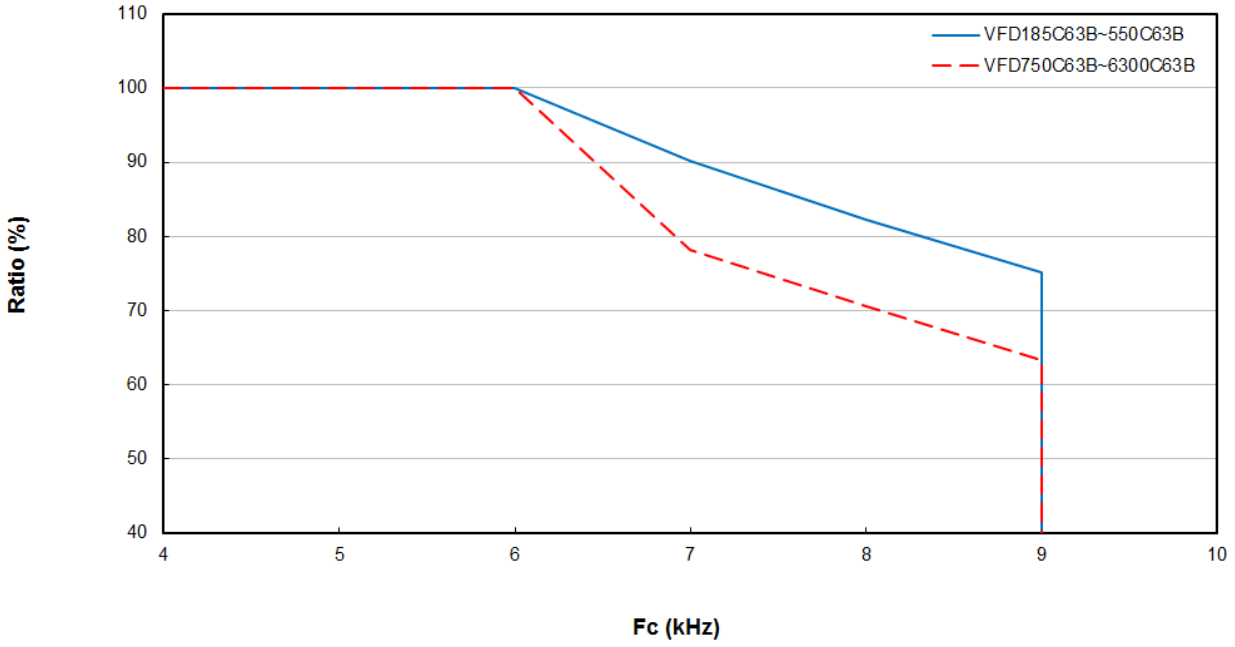

Derating Curve (FOC, PMFOC, PMFOC+PG, TQC, TQC+PG)
Setting 1
Setting 0 or 2
(50°C：UL Open Type)
(40°C：UL Type 1 or Open Type-Side by Side)

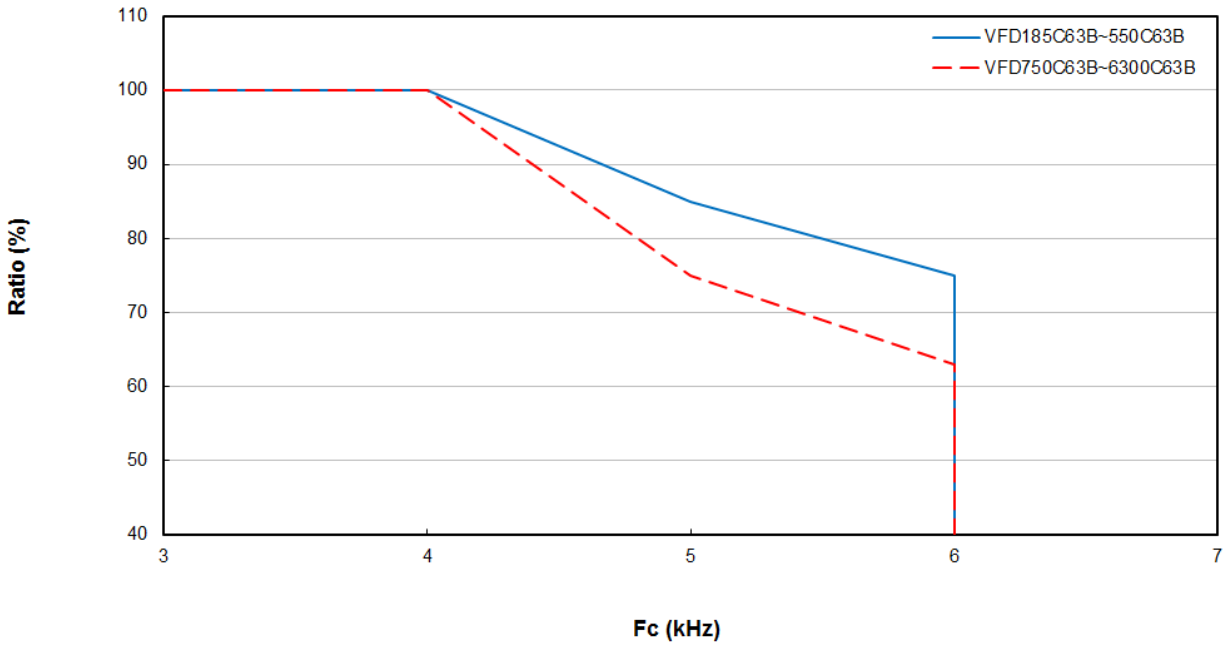

06-56 PT100 Detection Level 1

Factory Setting:5.000

Settings 0.000~10.000V

06-57 PT100 Detection Level 2

Factory Setting: 7.000

Settings 0.000~10.000V

Make sure Pr. 06-57 > Pr.06-56.

06-58 PT100 Level 1 Frequency Protection

Factory Setting: 0.00

Settings 0.00~599.00 Hz

06-59 PT100 activation level delay time

Factory Setting: 60 sec

Settings 0~6000 sec

PT100 operation

(1) Use AVI, AUI or ACI(set to 0-10V) for analog voltage input and select PT100 mode.
(2) Choose one of the analog voltage input type: (a)AVI (Pr.03-00=11), (b) AUI (Pr.03-02=11), or (c) ACI (Pr.03-01=11 and Pr.03-29=1).
(3) When using ACI as analog voltage input, set Pr.03-01=11 and Pr.03-29=1. Then switch SW2 to 0-10V on the I/O control terminal block.
(4) Set Pr.03-23=23 and AFM2 to constant current output. Switch AFM2 (SW2) to 0-20mA on the I/O control terminal block and set constant current output to 9mA by setting Pr.03-33=45. The AFM2 constant output current is 20mA * 45% = 9mA.
(5) Pr.03-33 is for adjusting the constant voltage or constant current of AFM2, the setting range is 0~100.00%.
(6) There are two types of action level for PT100. The diagram of PT protecting action is shown as below:

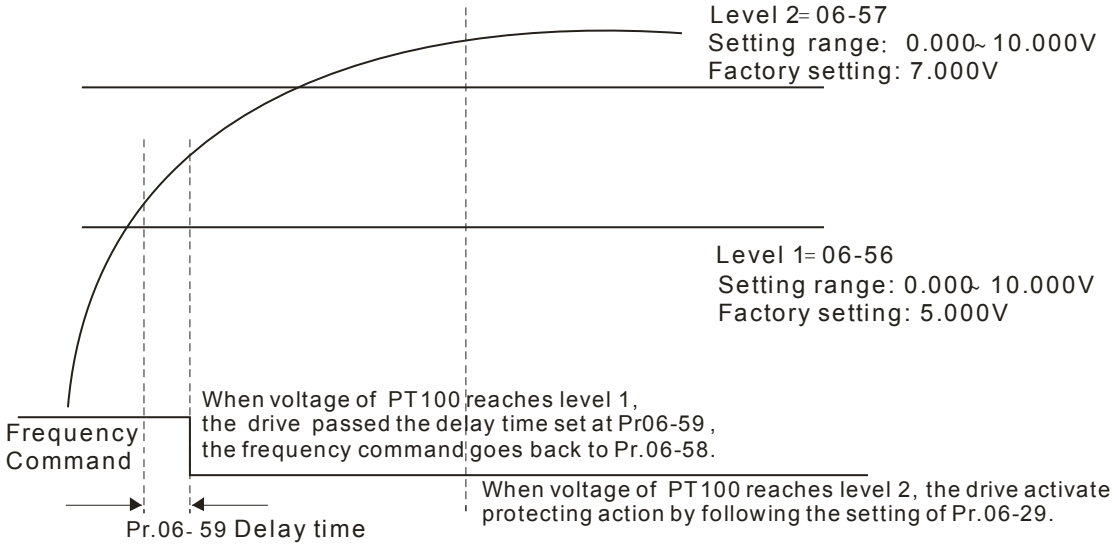

(7) PT100 wiring diagram:

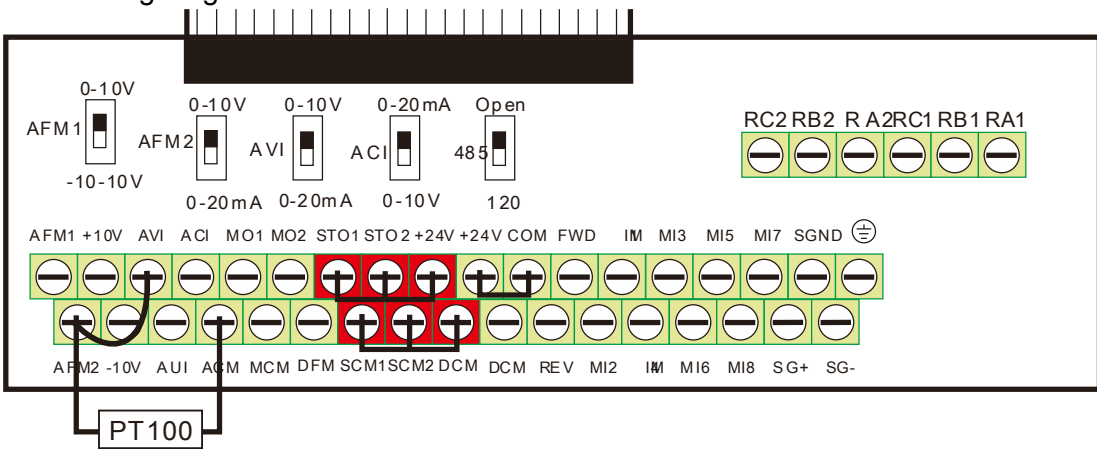

Figure 1

📖 When Pr.06-58=0.00Hz, PT100 function is disabled.

Example:
A PT100 is installed to the drive. If motor temperature reaches 135℃ (275°F) or higher, the drive will decrease motor frequency to the setting of Pr.06-58. Motor will operate at this frequency (Pr.06-58) till the motor temperature decreases to 135℃(275°F) or lower. If motor temperature exceeds 150℃(302°F), the motor will decelerate to stop and outputs an 'OH3' warning.

Set up process:

1. Switch AFM2 (SW2) to 0-20mA on the I/O control terminal block. (Refer to Figure 1, PT100 wiring diagram)
2. Wiring (Refer to Figure 1, PT100 wiring diagram):
   Connect external terminal AFM2 to (+)
   Connect external terminal ACM to (-)
   Connect external terminals AFM2 and AVI to short-circuit
3. Set Pr.03-00=11 or Pr.03-23=23 or Pr.03-33=45%(9mA)
4. Refer to RTD temperature and resistance comparison table
   Temperature=135℃, resistance=151.71Ω; Input current: 9mA, Voltage: approximately: 1.37Vdc
   Temperature=150℃, resistance=157.33Ω; Input current:9mA, Voltage: approximately: 1.42Vdc
5. Set Pr.06=56=1.37 and Pr.06-58=10Hz. When RTD temperature increases to 135℃ or higher, the drive will decelerate to the selected frequency. When Pr.06-58=0, the drive will not run.
6. Set Pr.06-57=1.42 and Pr.06-29=1 (warning and decelerate to stop). When RTD temperature increases to 150℃ or higher, the drive will decelerate to stop and outputs an 'OH3' warning.

06-60	Software Detection GFF Current Level
	Factory Setting: 60.0
Settings	0.0~6553.5 %

06-61	Software Detection GFF Filter Time
	Factory Setting: 0.10
Settings	0.00~655.35 sec

📖 When the motor drive detects the unbalanced three-phase out current is higher than the setting of Pr06-60, GFF protection will be activated. Then the motor drive will stop outputting.

📖 When 3-phase current output unbalance value has exceeds Pr06-60 setting, drive will trip up GFF and stop output immediately.

06-62	Reserved

06-63	Fault Record 1 (day)
06-65	Fault Record 2 (day)
06-67	Fault Record 3 (day)
06-69	Fault Record 4 (day)

Factory Setting: Read only

Settings 0~65535 days

06-64	Fault Record 1 (min)
06-66	Fault Record 2 (min)
06-68	Fault Record 3 (min)
06-70	Fault Record 4 (min)

Factory Setting: Read only

Settings 0~1439 min

📖 When there is any malfunctions in motor drive operation, Pr06-17~22 will record 6 malfunctions recently, and Pr06-63~70 can record the operation time for 4 malfunctions in sequence. It can help to check if there is any wrong with the drive according to the recorded internal time.

For example: The first error: ocA occurs in 1000 minutes after motor drive start operation. The second error: ocd happens after another 1000 minutes. The 4th error: ocA happens after another 1000 minutes. Then, the 5th error is ocd, happening 1000 minutes following 4th error. Last, 6th error ocn happens 1000 minutes after 5th error.

Then Pr06-17~Pr06-22 and Pr06-63~Pr06-70 will be:

	1st fault	2nd fault	3rd fault	4th fault	5th fault	6th fault
06-17	ocA	ocd	ocn	ocA	ocd	ocn
06-18	0	ocA	ocd	ocn	ocA	ocd
06-19	0	0	ocA	ocd	ocn	ocA
06-20	0	0	0	ocA	ocd	ocn
06-21	0	0	0	0	ocA	ocd
06-22	0	0	0	0	0	ocA
06-63	1000	560	120	1120	680	240
06-64	0	1	2	2	3	4
06-65	0	1000	560	120	1120	680
06-66	0	0	1	2	2	3
06-67	0	0	1000	560	120	1120
06-68	0	0	0	1	2	2
06-69	0	0	0	1000	560	120
06-70	0	0	0	0	1	2

※ From time record, it can be known that the last fault (Pr06-17) happened after the drive run for 4days and 240 minutes.

06-71 Low Current Setting Level

Factory Setting: 0.0

Settings 0.0 ~ 100.0 %

06-72 Low Current Detection Time

Factory Setting: 0.00

Settings 0.00 ~ 360.00 sec

06-73 Treatment for low current

Factory Setting: 0

Settings
0 : No function
1 : warn and coast to stop
2 : warn and ramp to stop by 2nd deceleration time
3 : warn and operation continue

- The drive will operate as the setting of Pr.06-73 when output current is lower than the setting of Pr.06-71 and when low current continues for a period longer than the setting of Pr.06-72. This parameter can also be used with external multi-function output terminal 44 (MO44) for low current output.
- The low current detection function will not be executed when drive is at sleep or standby status.

07 Special Parameters

This parameter can be set during operation.

07-00 Software Brake Level

Factory Setting:895.0/1057.0

Settings 575V series: 850.0~1116.0Vdc
690V series: 939.0~1318.0Vdc

- This parameter sets the DC-bus voltage at which the brake chopper is activated. Users can choose the suitable brake resistor to have the best deceleration. Refer to Chapter 7 Accessories for the information of the brake resistor.
- It is only valid for the models below 37kW of 690V models and all models of 575V.

07-01 DC Brake Current Level

Factory Setting: 0

Settings 0~100%

- This parameter sets the level of DC Brake Current output to the motor during start-up and stopping. When setting DC Brake Current, the Rated Current is regarded as 100%. It is recommended to start with a low DC Brake Current Level and then increase until proper holding torque has been attained.
- When it is in FOCPG control mode, DC brake is zero-speed operation. It can enable DC brake function by setting to any value. The drive will output an appropriate current to meet the actual need.

07-02 DC Brake Time at RUN

Factory Setting: 0.0

Settings 0.0~60.0 sec

- The motor may be in the rotation status due to external force or itself inertia. If the drive is used with the motor at this moment, it may cause motor damage or drive protection due to over current. This parameter can be used to output DC current before motor operation to stop the motor and get a stable start. This parameter determines the duration of the DC Brake current after a RUN command. When it is set to 0.0, it is invalid.

07-03 DC Brake Time at Stop

Factory Setting: 0.0

Settings 0.0~60.0 sec

- The motor may be in the rotation status after drive stop outputting due to external force or itself inertia and can’t stop accurately. This parameter can output DC current to force the motor drive stop after drive stops to make sure that the motor is stop.
- This parameter determines the duration of the DC Brake current during stopping. To DC brake at stop, this function will be valid when Pr.00-22 is set to 0 or 2. When setting to 0.0, it is invalid.
- Related parameters: Pr.00-22 Stop Method, Pr.07-04 Start-point for DC Brake

07-04 DC Brake Frequency at STOP

Factory Setting: 0.00

Settings 0.00~599.00Hz

This parameter determines the frequency when DC Brake will begin during deceleration. When this setting is less than start frequency (Pr.01-09), the start-point for DC brake will start from the min. frequency.

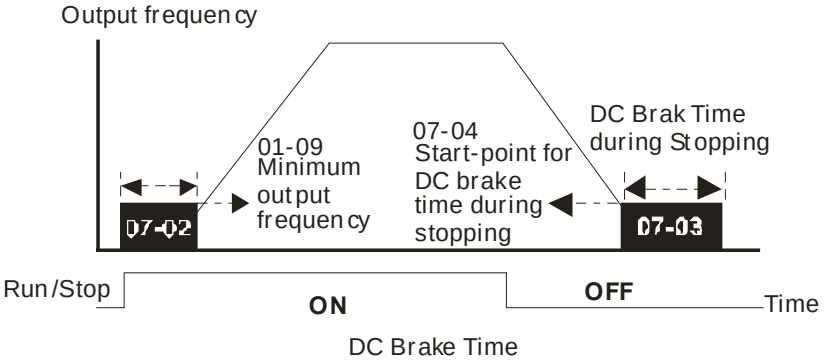

DC Brake at Start-up is used for loads that may move before the AC drive starts, such as fans and pumps. Under such circumstances, DC Brake can be used to hold the load in position before setting it in motion.

DC Brake at stop is used to shorten the stopping time and also to hold a stopped load in position, such as crane or cutting machine.

DC Brake at Start-up is used for loads that may move before the AC drive starts, such as fans and pumps. Under such circumstances, DC Brake can be used to hold the load in position before setting it in motion.

DC Brake at stop is used to shorten the stopping time and also to hold a stopped load in position, such as crane or cutting machine.

07-05 Voltage Incrasing Gain

Factory Setting: 100

Settings 1~200%

When the user is using speed tracking, adjust Pr07-05 to slow down the increasing of voltage if there are errors such as oL or oc.

07-06 Restart after Momentary Power Loss

Factory Setting: 0

Settings 0: Stop operation
1: Speed search for last frequency command
2: Speed search for the minimum output frequency

This parameter determines the operation mode when the AC motor drive restarts from a momentary power loss.

The power connected to the drive may power off momentarily due to many reasons. This function allows the drive to keep outputting after power is on again after power off and won't cause drive stops.

- Setting 1: Operation continues after momentary power loss, speed search starts with the Master Frequency reference value after drive output frequency and motor rotator speed is synchronous. The motor has the characteristics of big inertia and small obstruction. For example, in the equipment with big inertia wheel, it doesn't need to wait to execute operation command until wheel is complete stop after re-start to save time.
- Setting 2: Operation continues after momentary power loss, speed search starts with the minimum output frequency after drive output frequency and motor rotator speed is synchronous. The motor has the characteristics of small inertia and bigger obstruction.
- In PG control mode, the AC motor drive will execute the speed search function automatically by the PG speed when this setting isn't set to 0.

07-07 Maximum Power Loss Duration

Factory Setting: 2.0

Settings 0.0~20.0 sec

- If the duration of a power loss is less than this parameter setting, the AC motor drive will resume operation. If it exceeds the Maximum Allowable Power Loss Time, the AC motor drive output is then turned off (coast stop).
- The selected operation after power loss in Pr.07-06 is only executed when the maximum allowable power loss time is ≤5 seconds and the AC motor drive displays "LU".
  But if the AC motor drive is powered off due to overload, even if the maximum allowable power loss time is ≤5 seconds, the operation mode as set in Pr.07-06 is not executed. In that case it starts up normally.

07-08 Base block Time

Factory Setting: 0.5

Settings 0.1~5.0 sec

- When momentary power loss is detected, the AC drive will block its output and then wait for a specified period of time (determined by Pr.07-08, called Base-Block Time) before resuming operation. This parameter should be set at a value to ensure that any residual regeneration voltage from the motor on the output has disappeared before the drive is activated again.

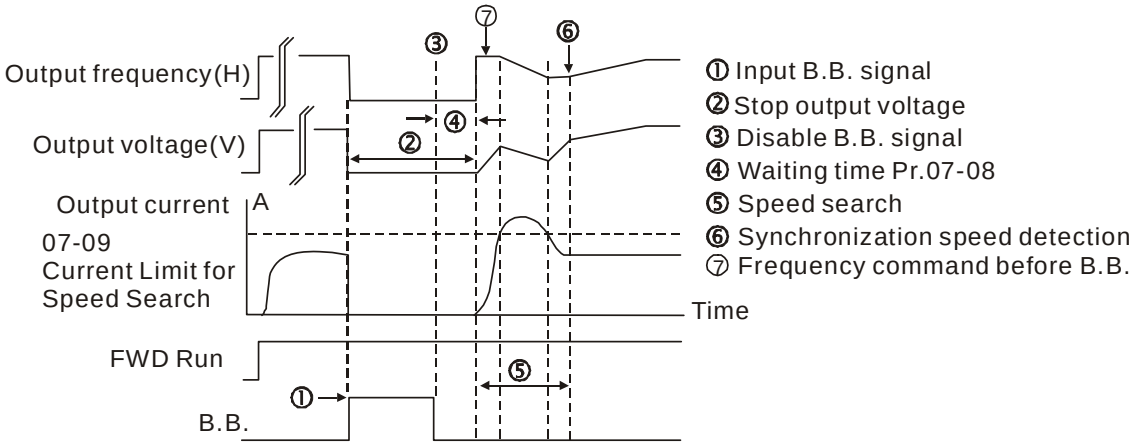

B.B. Search with last output frequency downward timing chart

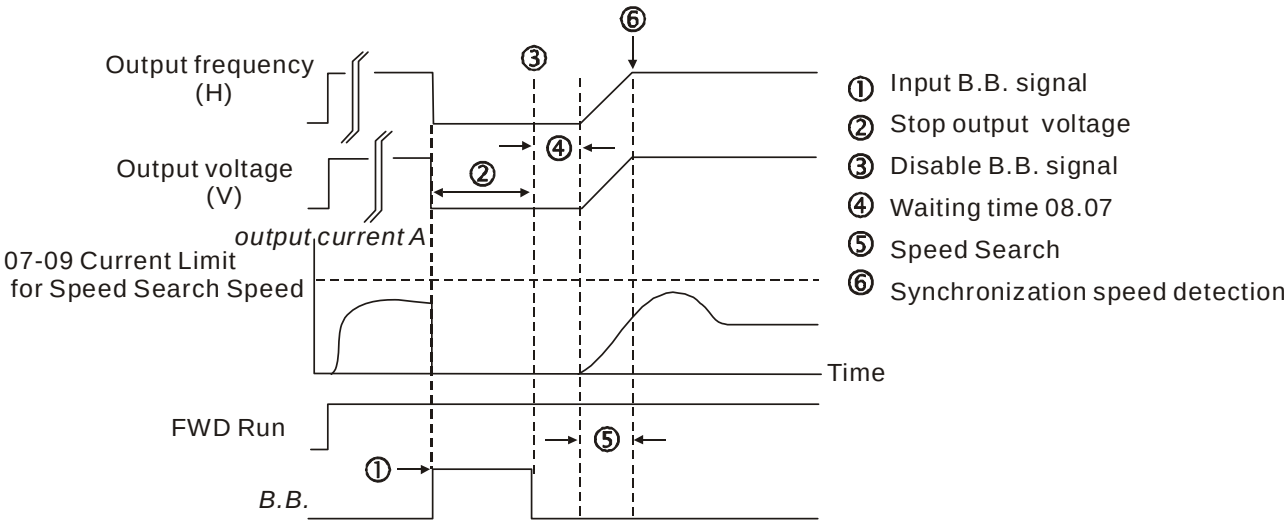

B.B. Search with minimum output frequency upward timing chart

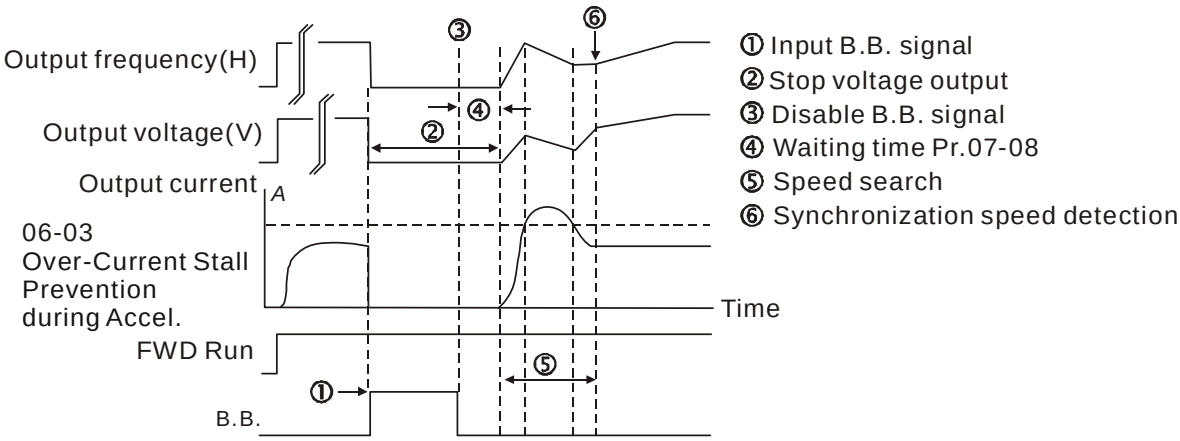

B.B. Search with minimum output frequency upward timing chart

07-09 Current Limit for Speed Search

Factory Setting: 100

Settings 20~200%

- Following a momentary power loss, the AC motor drive will start its speed search operation only if the output current is greater than the value set by Pr.07-09.
- When executing speed search, the V/f curve is operated by group 1 setting. The maximum current for the optimum accel./decel. and start speed search is set by Pr.07-09.
- The maximum speed search level will affect the synchronous time. It will get the synchronization faster when this parameter is set to larger value. But too large value may activate overload protection.

07-10 Treatment after Fault

Factory Setting: 0

Settings 0: Stop operation
1: Speed search starts with current speed
2: Speed search starts with minimum output frequency

- In PG control mode, the AC motor drive will execute the speed search function automatically by the PG speed when this setting isn't set to 0.
- Fault includes: bb,oc,ov,occ. To restart after oc, ov, occ, Pr.07-11 can not be set to 0.

07-11 Auto Restart Time after Fault

Factory Setting: 0

Settings 0~10

- After fault (oc, ov, occ) occurs, the AC motor drive can be reset/restarted automatically up to 10 times.
- Setting this parameter to 0 will disable the reset/restart operation after any fault has occurred. When enabled, the AC motor drive will restart with Pr07-10 setting after fault auto reset.
- If the time of reset/restart exceeds Pr.07-11 setting, the fault will not be restart /reset until user reset manually and run the motor drive again.

07-12 Speed Search during Start-up

Factory Setting: 0

Settings 0: Disable
1: Speed search from maximum output frequency
2: Speed search from start-up motor frequency
3: Speed search from minimum output frequency

- This parameter is used for starting and stopping a motor with a high inertia. A motor with high inertia will take 2-5 minutes or longer to stop completely. By setting this parameter, the user does not need to wait for the motor to come to a complete stop before restarting the AC motor drive. If a PG card and encoder is used on the drive and motor, then the speed search will start from the speed that is detected by the encoder and accelerate quickly to the commanded frequency. The output current is set by the Pr.07-09.
- In PG control mode, the AC motor drive will execute the speed search function automatically by the PG speed when this setting isn't set to 0.

07-13 dEb Function Selection

Factory Setting: 0

Settings 0: Disable
1: dEb with auto accel./decal., the output frequency will not return after power reply.
2: dEb with auto accel./decal., the output frequency will return after power reply

- This parameter is used for the decel. time selection for momentary power loss.

07-14 Reserved

07-15 Dwell Time at Accel.

Factory Setting: 0.00

Settings 0.00~600.00 sec

07-16 Dwell Frequency at Accel.

Factory Setting: 0.00

Settings 0.00~599.00Hz

07-17 Dwell Time at Decel.

Factory Setting: 0.00

Settings 0.00~600.00 sec

07-18 Dwell Frequency at Decel.

Factory Setting: 0.00

Settings 0.00~599.00 Hz

- In the heavy load situation, Dwell can make stable output frequency temporarily, such as crane or elevator.
- Pr.07-15 to Pr.07-18 is for heavy load to prevent OV or OC occurs.

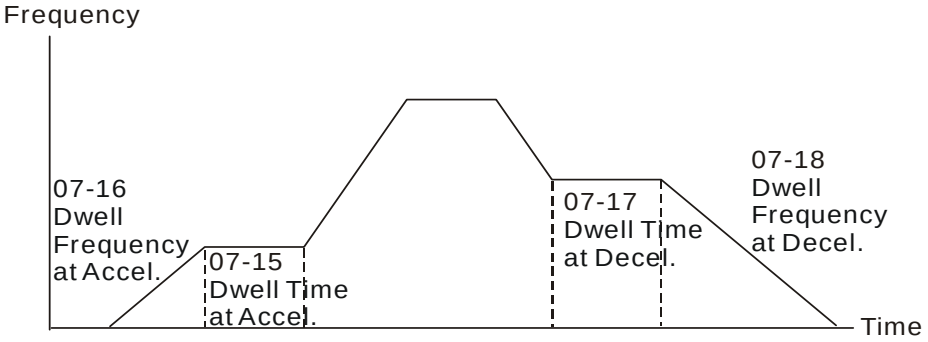

Dwell at accel./decel.

07-19 Fan Cooling Control

Factory Setting: 0

Settings 0: Fan always ON

1: 1 minute after the AC motor drive stops, fan will be OFF

2: When the AC motor drive runs, the fan is ON. When the AC motor drive stops, the fan is OFF

3: Fan turns ON when preliminary IGBT temperature (around 60°C) is attained.

4: Fan always OFF

- This parameter is used for the fan control.
- Setting 0: Fan will be ON as the drive's power is turned ON.
- Setting 1: 1 minute after AC motor drive stops, fan will be OFF
- Setting 2: AC motor drive runs and fan will be ON. AC motor drive stops and fan will be OFF.
- Setting 3: Fan run according to IGBT and capacitance temperature. Fan will be ON when IGBT temperature is higher than 60oC. Fan will be OFF, when capacitance temperature is lower than 40oC.
- Setting 4: Fan is always OFF

07-20 Emergency Stop (EF) & Force Stop

Factory Setting: 0

Settings
0: Coast to stop
1: Stop by 1st deceleration time
2: Stop by 2nd deceleration time
3: Stop by 3rd deceleration time
4: Stop by 4th deceleration time
5: System Deceleration (According to original deceleration time)
6: Automatic Deceleration (Pr01-46)

When the multi-function input terminal is set to 10(EF) or 18(Emergency stop) and is activated, the drive will stop according to the setting in Pr.07-20.

07-21 Auto Energy-saving Operation

Factory Setting: 0

Settings
0: Disable
1: Enable

When Pr.07-21 is set to 1, the acceleration and deceleration will operate with full voltage. During constant speed operation, it will auto calculate the best voltage value by the load power for the load. This function is not suitable for the ever-changing load or near full-load during operation.

When the output frequency is constant, i.e. constant operation, the output voltage will auto decrease by the load reduction. Therefore, the drive will operate with min. power, multiplication of voltage and current.

07-22 Energy-saving Gain

Factory Setting: 100

Settings 10~1000%

When Pr. 07-21 is set to 1, this parameter can be used to adjust the gain of energy-saving. The factory setting is 100%. If the result is not good, it can adjust by decreasing the setting. If the motor oscillates, it should increase the setting value.

At some special application such as High speed spindle, the motor temperature rise is been highly concern. Thus, when the motor is not working with load, the motor current will requested to reduce to a lower level. To Lowering this parameter setting can meet this requirement.

07-23 Auto Voltage Regulation(AVR) Function

Factory Setting: 0

Settings
0: Enable AVR
1: Disable AVR
2: Disable AVR during deceleration

The rated voltage of the motor is usually 220V/200VAC 60Hz/50Hz and the input voltage of the AC motor drive may vary between 180V to 264 VAC 50Hz/60Hz. Therefore, when the AC motor drive is used without AVR function, the output voltage will be the same as the input voltage. When the motor runs at voltages exceeding the rated voltage with 12% - 20%, its lifetime will be shorter and it can be damaged due to higher temperature, failing insulation and unstable torque output.

- AVR function automatically regulates the AC motor drive output voltage to the motor rated voltage. For instance, if V/f curve is set at 200 VAC/50Hz and the input voltage is at 200V to 264VAC, then the motor Output Voltage will automatically be reduced to a maximum of 200VAC/50Hz. If the input voltage is at 180V to 200VAC, output voltage to motor and input power will be in direct proportion.
- Setting 0: when AVR function is enabled, the drive will calculate the output voltage by actual DC-bus voltage. The output voltage won't be changed by DC bus voltage.
- Setting 1: when AVR function is disabled, the drive will calculate the output voltage by DC-bus voltage. The output voltage will be changed by DC bus voltage. It may cause insufficient/over current.
- Setting 2: the drive will disable the AVR during deceleration, such as operated from high speed to low speed.
- When the motor ramps to stop, the deceleration time is longer. When setting this parameter to 2 with auto acceleration/deceleration, the deceleration will be quicker.
- When it is in FOCPG or TQCPG, it is recommended to set to 0 (enable AVR).

07-24 Filter Time of Torque Command (V/F and SVC control mode)

Factory Setting: 0.500

Settings 0.001~10.000 sec

- When the setting is too long, the control will be stable but the control response will be delay. When the setting is too short, the response will be quickly but the control may be unstable. User can adjust the setting by the control and response situation.

07-25 Filter Time of Slip Compensation (V/F and SVC control mode)

Factory Setting: 0.100

Settings 0.001~10.000 sec

- It can set Pr.07-24 and 07-25 to change the response time of compensation.
- If Pr.07-24 and 07-25 are set to 10seconds, the response time of compensation is the slowest. But the system may be unstable when the setting is too short.

07-26 Torque Compensation Gain (V/F and SVC control mode)

Factory Setting: 0
(1 in SVC mode)

Settings 0~10

- When the motor load is large, a part of drive output voltage is absorbed by the resistor of stator winding and causes insufficient voltage at motor induction and result in over output current and insufficient output torque. It can auto adjust output voltage by the load and keep the air gap magnetic fields stable to get the optimal operation.
- In the V/F control, the voltage will be decreased in direct proportion when the frequency is decreased. It'll cause decrease torque at low speed due to small AC resistor and the same DC resistor. Therefore, Auto torque compensation function will increase the output voltage in the low frequency to get higher start torque.
- When Pr.07-26 is set to large, it may cause motor overflux and result in too large output current, motor overheat or triggers protection function.

07-27 Slip Compensation Gain (V/F and SVC control mode)

Factory Setting: 0.00

Settings 0.00~10.00

- The induction motor needs the constant slip to produce magnetic torque. It can be ignore in the higher motor speed, such as rated speed or 2-3% slip.
- In the operation with variable frequency, the slip and the synchronous frequency will be in reverse proportion to produce the same magnetic torque. That is the slip will be larger with the reduction of synchronous frequency. The motor may stop when the synchronous frequency is decreased to a specific value. Therefore, the slip serious affects the accuracy of motor speed at low speed.
- In another situation, when the drive uses with induction motor, the slip will be increased by the increasing load. It also affects the accuracy of motor speed.
- This parameter can be used to set compensation frequency and reduce the slip to close the synchronous speed when the motor runs in the rated current to raise the drive accuracy. When the drive output current is larger than Pr.05-05 No-load Current of Induction Motor 1 (A), the drive will compensation the frequency by this parameter.
- When the control method (Pr.00-11) is changed from V/f mode to vector mode, this parameter will auto be set to 1.00. Otherwise, it will be set to 0.00. Please do the compensation of slip after overload and acceleration. The compensation value should be increased from small to large gradually. That is to add the output frequency with motor rated slip X Pr.07-27 Slip Compensation Gain when the motor is rated load. If the actual speed ratio is slow than expectation, please increase the setting. Otherwise, decrease the setting.

07-28 Reserved

07-29 Slip Deviation Level

Factory Setting: 0

Settings 0~100.0%
0: No detection

07-30 Detection Time of Slip Deviation

Factory Setting:1.0

Settings 0.0~10.0 sec

07-31 Over Slip Treatment

Factory Setting:0

Settings 0: Warn and keep operation
1: Warn and ramp to stop
2: Warn and coast to stop
3: No warning

- The Pr.07-29 to Pr.07-31 are to set allowable slip level/time and over slip treatment when the drive is running.

07-32 Motor Hunting Gain

Factory Setting:1000

Settings 0~10000

0: Disable

The motor will have current wave motion in some specific area. It can improve this situation by setting this parameter. (When it is high frequency or run with PG, it can be set to 0. when the current wave motion happens in the low frequency, please increase Pr.07-32.)

07-33 Autorestart internal of Fault

Factory Setting:60.0

Settings 0.0~6000.0 sec

When a reset/restart after fault occurs, the drive will regards Pr.07-33 as a time boundary and beging counting the numbers of faults occur within this time period. Within the period, if numbers of faults occurred did not exceed the setting in Pr.07-11, the counting will be cleared and starts from 0 when next fault occurs. However, if the numbers of faults occurred within this time period have exceed the setting in Pr.07-11, user will need to press RESET key manually for the drive to operate again.

08 High-function PID Parameters

✓ This parameter can be set during operation.

✓ 08-00 Input Terminal for PID Feedback

Factory Setting:0

Settings
0: No function
1: Negative PID feedback: on analogue input acc. To setting 5 of Pr. 03-00 to Pr.03-02.
2: Negative PID feedback from PG card (Pr.10-02, skip direction)
3: Negative PID feedback from PG card (Pr.10-02)
4: Positive PID feedback from external terminal AVI (Pr.03-00)
5: Positive PID feedback from PG card (Pr.10-02, skip direction)
6: Positive PID feedback from PG card (Pr.10-02)
7: Negative PID feeback from communication protocol
8: Positive PID feedback from communication protocol

- Negative feedback means: +target value – feedback. It is used for the detection value will be increased by increasing the output frequency.
- When Pr.03-00 to Pr.03-02 have the same setting, then the AVI will be the prioritized selection.
- Positive feedback means: -target value + feedback. It is used for the detection value will be decreased by increasing the output frequency.
- When Pr08-00≠7 neither ≠8, input value is disabled. The value of the setting remain the same after the derive is off.

Common applications for PID control

- ☑ Flow control: A flow sensor is used to feedback the flow data and performs accurate flow control.
- ☑ Pressure control: A pressure sensor is used to feedback the pressure data and performs precise pressure control.
- ☑ Air volume control: An air volume sensor is used to feedback the air volume data to have excellent air volume regulation.
- ☑ Temperature control: A thermocouple or thermistor is used to feedback temperature data for comfortable temperature control.
- ☑ Speed control: A speed sensor or encoder is used to feedback motor shaft speed or input another machines speed as a target value for closed loop speed control of master-slave operation. Pr.10.00 sets the PID set point source (target value).
- ☑ PID control operates with the feedback signal as set by Pr.10.01 either 0~+10V voltage or 4-20mA current.

- PID control loop:

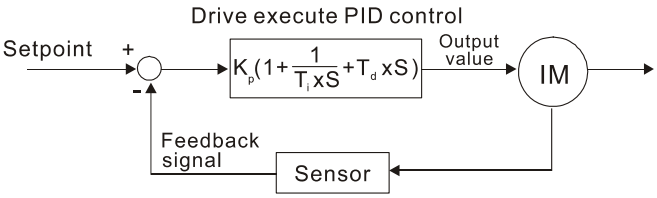

K_p: Proportional gain(P) T_i: Integral time(I) T_d: Derivative control(D) S: Operator

Concept of PID control

1. Proportional gain(P):
   the output is proportional to input. With only proportional gain control, there will always be a steady-state error.
2. Integral time(I):
   the controller output is proportional to the integral of the controller input. To eliminate the steady-state error, an “integral part” needs to be added to the controller. The integral time decides the relation between integral part and error. The integral part will be increased by time even if the error is small. It gradually increases the controller output to eliminate the error until it is 0. In this way a system can be stable without steady-state error by proportional gain control and integral time control.
3. Differential control(D):
   the controller output is proportional to the differential of the controller input. During elimination of the error, oscillation or instability may occur. The differential control can be used to suppress these effects by acting before the error. That is, when the error is near 0, the differential control should be 0. Proportional gain(P) + differential control(D) can be used to improve the system state during PID adjustment.

When PID control is used in a constant pressure pump feedback application:

Set the application’s constant pressure value (bar) to be the set point of PID control. The pressure sensor will send the actual value as PID feedback value. After comparing the PID set point and PID feedback, there will be an error. Thus, the PID controller needs to calculate the output by using proportional gain(P), integral time(I) and differential time(D) to control the pump. It controls the drive to have different pump speed and achieves constant pressure control by using a 4-20mA signal corresponding to 0-10 bar as feedback to the drive.

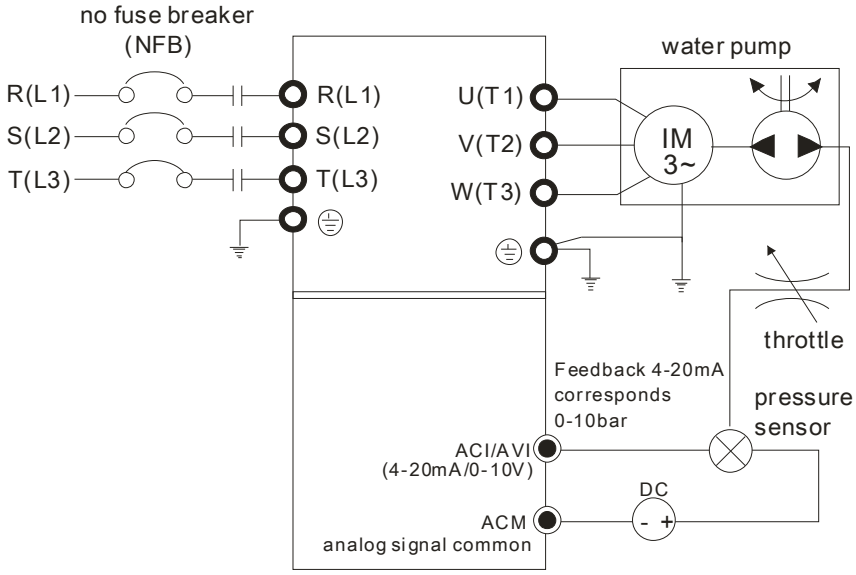

1. Pr.00-04 is set to 10 (Display PID analog feedback signal value (b) (%))
2. Pr.01-12 Acceleration Time will be set as required
3. Pr.01-13 Deceleration Time will be set as required
4. Pr.00-21=0 to operate from the digital keypad
5. Pr.00-20=0, the set point is controlled by the digital keypad
6. Pr.08-00=1 (Negative PID feedback from analog input)
7. ACI analog input Pr. 03-01 set to 5, PID feedback signal.

8. Pr.08-01-08-03 will be set as required
   8.1 If there is no vibration in the system, increase Pr.08-01(Proportional Gain (P))
   8.2 If there is no vibration in the system, reduce Pr.08-02(Integral Time (I))
   8.3 If there is no vibration in the system, increase Pr.08-03(Differential Time(D))

📖 Refer to Pr.08-00 to 08-21 for PID parameters settings.

08-01 Proportional Gain (P)

Factory Setting:80.0

Settings 0.0~500.0

📖 When the setting is 1.0, it means Kp gain is 100%; setting is 0.5, Kp gain means 50%.

📖 It is used to eliminate the system error. It is usually used to decrease the error and get the faster response speed. But if the value is set too high, it may cause the system oscillation and instability.

📖 If the other two gains (I and D) are set to zero, proportional control is the only one effective.

08-02 Integral Time (I)

Factory Setting:1.00

Settings 0.00~100.00 sec
0.00: Disable

📖 The integral controller is used to eliminate the error during stable system. The integral control doesn't stop working until error is 0. The integral is acted by the integral time. The smaller integral time is set, the stronger integral action will be. It is helpful to reduce overshoot and oscillation to make a stable system. At this moment, the decreasing error will be slow. The integral control is often used with other two controls to become PI controller or PID controller.

📖 This parameter is used to set the integral time of I controller. When the integral time is long, it will have small gain of I controller, the slower response and bad external control. When the integral time is short, it will have large gain of I controller, the faster response and rapid external control.

📖 When the integral time is too small, it may cause system oscillation.

📖 If the integral time is set as 0.00, Pr.08-02 will be disabled.

08-03 Derivative Control (D)

Factory Setting:0.00

Settings 0.00~1.00 sec

📖 The differential controller is used to show the change of system error and it is helpful to preview the change of error. So the differential controller can be used to eliminate the error to improve system state. With the suitable differential time, it can reduce overshoot and shorten adjustment time. However, the differential operation will increase the noise interference. Please note that too large differential will cause big noise interference. Besides, the differential shows the change and the output of the differential will be 0 when there is no change. Therefore, the differential control can't be used independently. It needs to be used with other two controllers to make a PD controller or PID controller.

📖 This parameter can be used to set the gain of D controller to decide the response of error change. The suitable differential time can reduce the overshoot of P and I controller to decrease the oscillation and have a stable system. But too long differential time may cause system oscillation.

- The differential controller acts for the change of error and can't reduce the interference. It is not recommended to use this function in the serious interference.

08-04 Upper limit of Integral Control

Factory Setting:100.0

Settings 0.0~100.0%

- This parameter defines an upper bound or limit for the integral gain (I) and therefore limits the Master Frequency. The formula is: Integral upper bound = Maximum Output Frequency (Pr.01-00) x (Pr.08-04 %).
- Too large integral value will make the slow response due to sudden load change. In this way, it may cause motor stall or machine damage.

08-05 PID Output Frequency Limit

Factory Setting:100.0

Settings 0.0~110.0%

- This parameter defines the percentage of output frequency limit during the PID control. The formula is Output Frequency Limit = Maximum Output Frequency (Pr.01-00) X Pr.08-05 %.

08-06 PID feedback value by communication protocol

Factory Setting: Read only

Settings -200.00%~200.00%

- When PID feedback input is set as communication (Pr08-00=7 or 8), PID feedback value can be set by this value.

08-07 PID Delay Time

Factory Setting: 0.0

Settings 0.0~35.0 sec

08-20 PID Mode Selection

Factory Setting: 0

Settings 0: Serial connection
1: Parallel connection

- When setting is 0, it uses conventional PID control structure.
- When setting is 1, proportional gain, integral gain and derivative gain are independent. The P, I and D can be customized to fit users' demand.
- Pr.08-07 determines the primary low pass filter time when in PID control. Setting a large time constant may slow down the response rate of drive.
- Output frequency of PID control will filter by primary low pass function. This function could filtering a mix frequencies. A long primary low pass time means filter degree is high and vice versa.
- Inappropriate setting of delay time may cause system error.
- PI Control: controlled by the P action only, and thus, the deviation cannot be eliminated entirely. To eliminate residual deviations, the P + I control will generally be utilized. And when the PI control is utilized, it could eliminate the deviation incurred by the targeted value changes and the

constant external interferences. However, if the I action is excessively powerful, it will delay the responding toward the swift variation. The P action could be used solely on the loading system that possesses the integral components.

- PD Control: when deviation occurred, the system will immediately generate some operation load that is greater than the load generated single handedly by the D action to restrain the increment of the deviation. If the deviation is small, the effectiveness of the P action will be decreasing as well. The control objects include occasions with integral component loads, which are controlled by the P action only, and sometimes, if the integral component is functioning, the whole system will be vibrating. On such occasions, in order to make the P action's vibration subsiding and the system stabilizing, the PD control could be utilized. In other words, this control is good for use with loadings of no brake functions over the processes.
- PID Control: Utilize the I action to eliminate the deviation and the D action to restrain the vibration, thereafter, combine with the P action to construct the PID control. Use of the PID method could obtain a control process with no deviations, high accuracies and a stable system.
- Serial connection

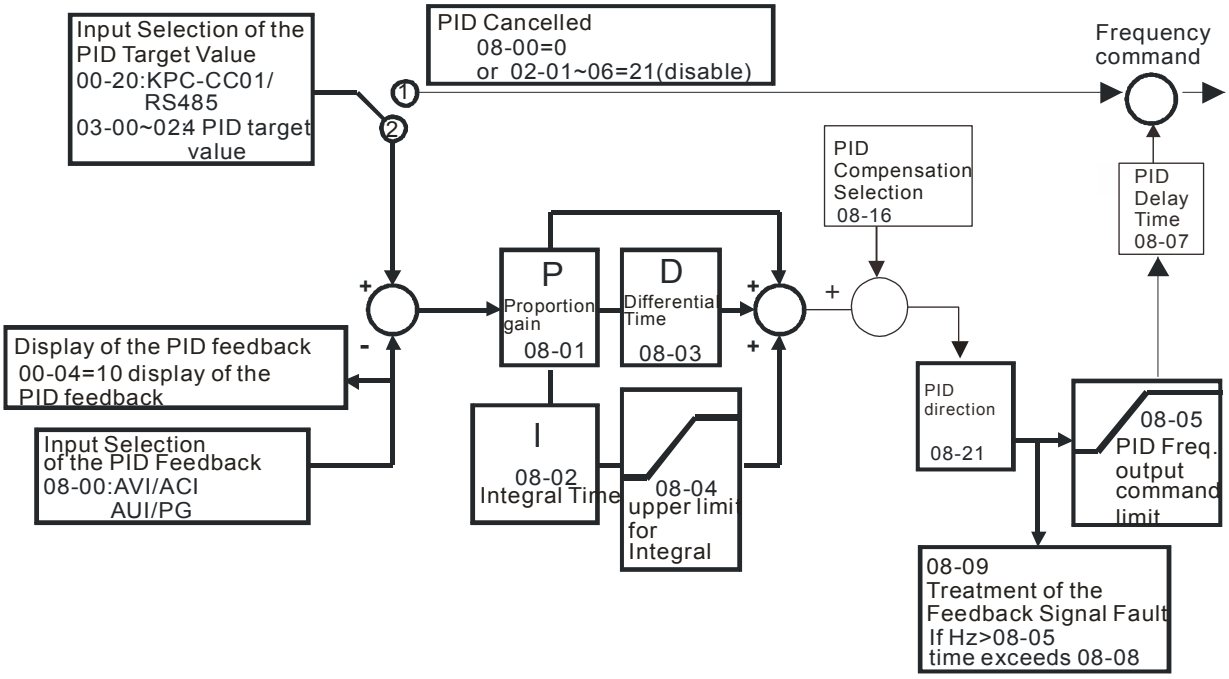

Parallel connection

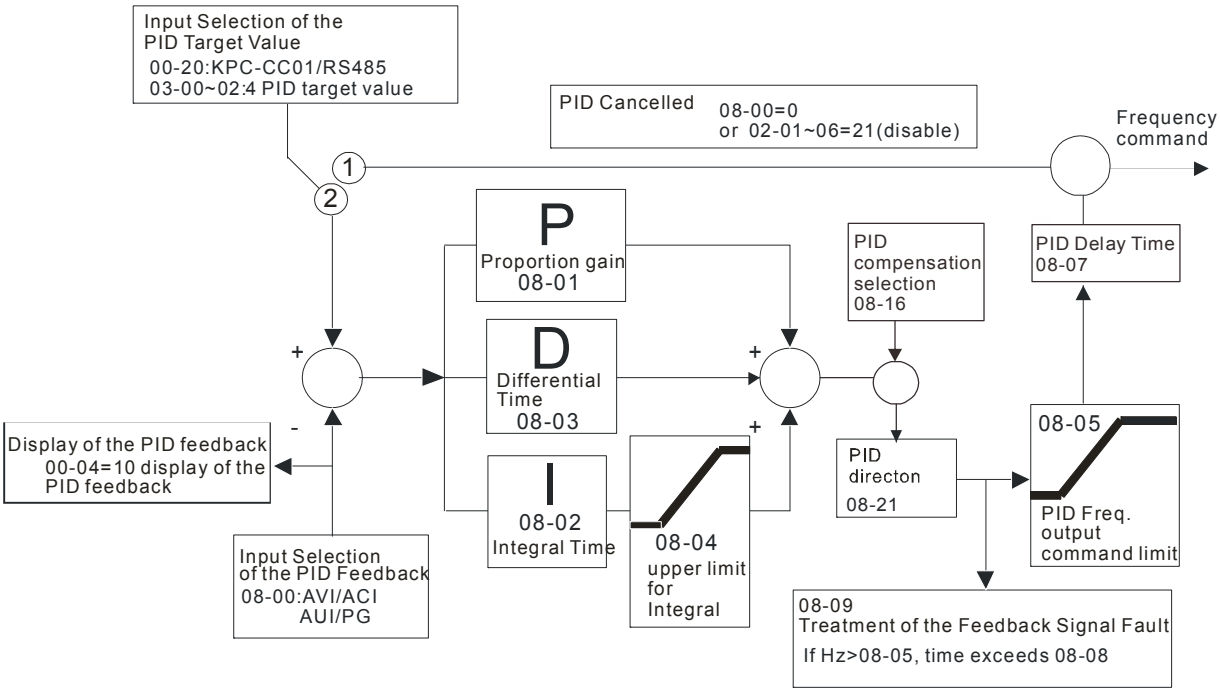

08-08 Feedback Signal Detection Time

Factory Setting: 0.0

Settings 0.0~3600.0 sec

Pr.08-08 is valid only for ACI 4-20mA.

This parameter sets the detection time of abnormal PID derative. If detection time is set to 0.0, detection function is disabled.

08-09 Feedback Signal Fault Treatment

Factory Setting: 0

Settings 0: Warn and keep operation
1: Warn and ramp to stop
2: Warn and coast to stop
3: Warn and operate at last frequency

This parameter is valid only for ACI 4-20mA.

AC motor drive acts when the feedback signals analog PID feedback is abnormal.

08-10 Sleep Reference

Factory Setting: 0.00

Settings 0.00~599.00Hz

Setting value of Pr08-10 determines if sleep reference and wake-up reference is enable or disable. When Pr08-10 = 0, it means disable. When 08-10 ≠ 0, it means enable.

08-11 Wake-up Reference

Factory Setting: 0.00

Settings 0.00~599.00Hz

When Pr08-18 = 0, the unit of Pr08-10 and that of Pr08-11 become frequency. The settings then become 0 ~ 600.0 Hz.

- When Pr08-18=1, the unit of Pr08-10 and that of Pr08-11 switch to percentage. The settings then switch to 0~200.00%.
- And the percentage is based on the input command not maximum. E.g. If the maximum is 100 Kg, the command now is 30kg, if 08-11=40%, it is 12kg.
- The same to 08-10.

08-12 Sleep Time

Factory Setting: 0.0

Settings 0.00~6000.0 sec

- When the frequency command is smaller than the sleep frequency and less than the sleep time, the frequency command is equal to the sleep frequency. However the frequency command remains at 0.00Hz until the frequency command becomes equal to or bigger than the wake-up frequency.

08-13 PID Deviation Level

Factory Setting: 10.0

Settings 1.0~50.0%

08-14 PID Deviation Time

Factory Setting: 5.0

Settings 0.1~300.0 sec

08-15 Filter Time for PID Feedback

Factory Setting: 5.0

Settings 0.1~300.0 sec

- When the PID control function is normal, it should calculate within a period of time and close to the target value.
- Refer to the PID control diagram for details. When executing PID feedback control, if |PID reference target value – detection value| > Pr.08-13 PID Deviation Level and exceeds Pr.08-14 setting, it will be judged as the PID control fault. Multiple-funtion output MO=15 (PID feedback error) will activate.

08-16 PID Compensation Selection

Factory Setting: 0

Settings 0: Parameter setting (Pr.08-17)
1: Analog input

- Pr08-16=0: PID compensation value is given via Pr08-17 setting.
- Pr08-16=1: The PID compensation value is given via analog input(Pr03-00~03-02=13) and display at Pr08-17(at this moment, Pr08-17 become read only).

08-17 PID Compensation

Factory Setting: 0

Settings -100.0~+100.0%

- The PID compensation value=Max. PID target value×Pr08-17. For example, the max. output frequency Pr01-00=60Hz, Pr08-17=10.0%, PID compensation value will increase output frequency 6.00Hz. 60.00Hz × 100.00% × 10.0% = 6.00Hz

08-18 Setting of Sleep Mode Function

Factory Setting: 0

Settings 0: Follow PID output command

1: Follow PID feedback signal

- When Pr08-18=0, the unit of Pr08-10 and that of Pr08-11 becomes frequency. The settings then become 0~600.00Hz.
- When Pr08-18=1, the unit of Pr08-10 and that of Pr08-11 switches to percentage. The settings then switch to 0~200.00%.

08-19 Wake-up Integral Limit

Factory Setting: 50.0

Settings 0.0~200.0%

- The wake-up integral limit of the VFD is to prevent sudden high speed running when the VFD wakes up.
- The wake-up integral frequency limit=(01-00×08-19%)
- The Pr08-19 is used to reduce the reaction time from sleep to wake-up.

08-21 Enable PID to Change the Operation Direction

Factory Setting: 0

Settings 0: Disable change of direction

1: Enable change of direction

08-22 Wake-up delay time

Factory Setting: 0.00

Settings 0.00~600.00 sec.

- Refer to Pr08-18 for more information.

08-23 PID Control Bit

Factory Setting: 0

Settings Bit0 =1, PID reverse running must follow the setting of Pr00-23

Bit0 = 0, PID reverse running follows PID's calculated value

- Bit0, When Pr08-21 = 1, PID reverse running is enable..
- Bit0 = 0, if the PID calculated value is positive, it will be forward running. If the PID calculated value is negative, it will be reverse running.

There are three scenarios for sleep and wake-up frequency.

1) Frequency Command (PID is not in use, Pr08-=00. Only works in VF mode)

When the output frequency ≦ the sleep frequency, and the VFD reaches the preset sleep time, then the VFD will be at the sleep mode.

When the frequency command reaches the wake-up frequency, the VFD will start to count the wake-up delay time. Then when the VFD reaches the wake-up delay time, the VFD will begin acceleration time to reach the frequency command.

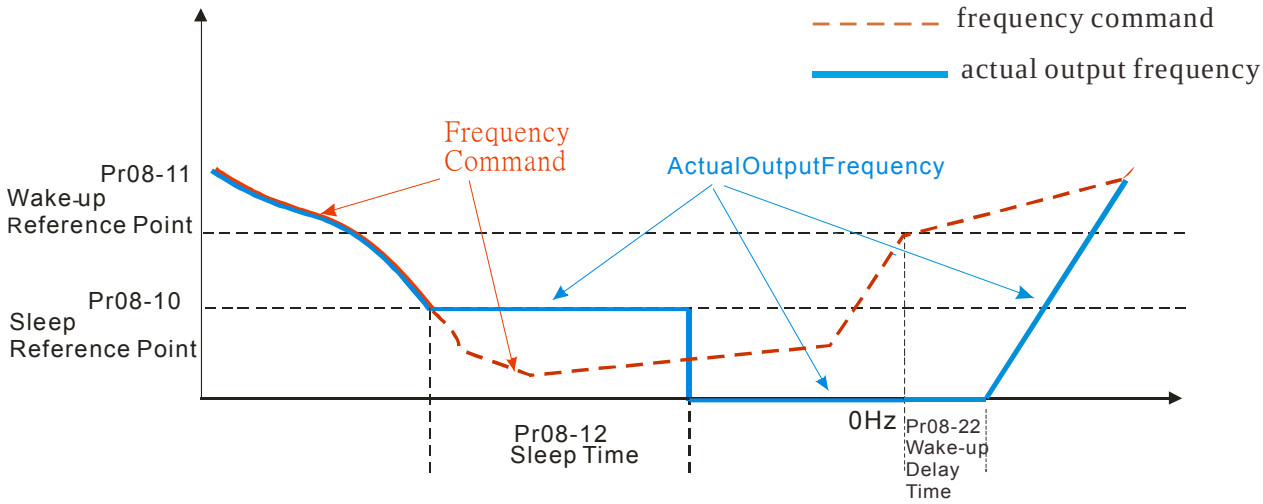

2) Frequency Command Calculation of the Internal PID

When the PID calculation reaches the sleep frequency, the VFD will start to count the sleep time and the output frequency will start to decrease. If the VFD exceeds the preset sleep time, it will directly go to sleep mode which is 0 Hz. But if the VFD doesn't reach the sleep time, it will remain at the lower limit (if there is a preset of lower limit.). Or it will remain at the lowest output frequency set at Pr01-07 and wait to reach the sleep time then go to sleep mode (0 Hz).

When the calculated frequency command reaches the wake-up frequency, the VFD will start to count the wake-up delay time. Once reaching the wake-up delay time, the VFD will start the acceleration time to reach the PID frequency command.

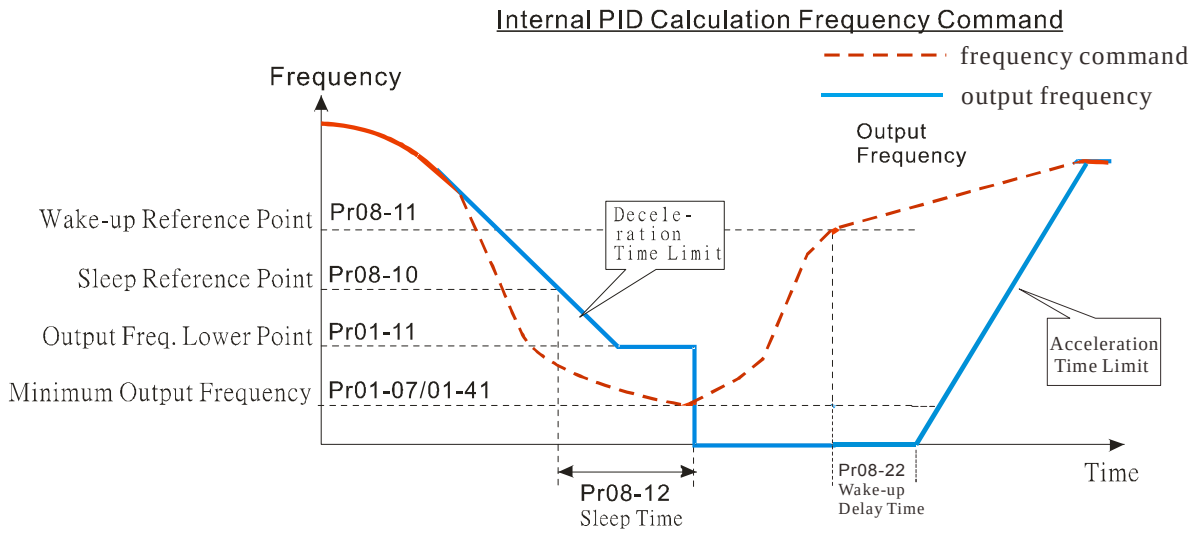

3) PID Feedback Rate Percentage (Use PID, Pr08-00 ≠ 0 and Pr08-18=1)

When the PID feedback rate reaches the sleep level percentage, the VFD starts to count the sleep time. The output frequency will also decrease. If the VFD exceeds the preset sleep time, it will go to sleep mode which is 0 Hz. But if the VFD doesn't reach the sleep time, it will remain at the lower limit (if there is a preset of lower limit.). Or it will remain at the lowest output frequency set at Pr01-07 and wait to reach the sleep time then go to sleep mode (0 Hz).

When PID feedback value reaches the wake up percentagethe motor drive will start to count the wake up delay time. Once reaches the wake up delay time, the motor drives starts the accelerating time to reach PID frequency command

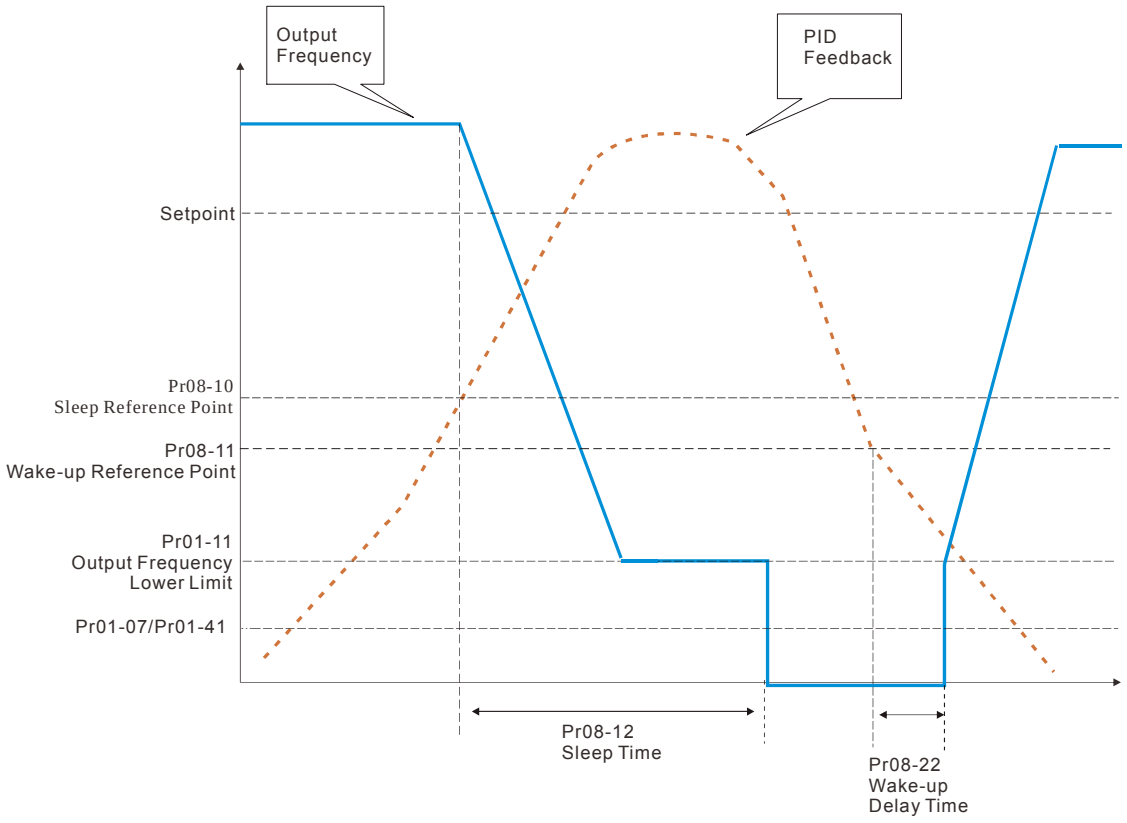

09 Communication Parameters

✓ The parameter can be set during the operation.

When using communication devices, connects AC drive with PC by using Delta IFD6530 or IFD6500.

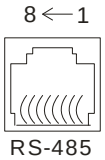

Modbus RS-485
Pin 1~2,7,8: Reserved
Pin 3, 6: GND
Pin 4: SG-
Pin 5: SG+

✓ 09-00 COM1 Communication Address

Factory Setting: 1

Settings 1~254

📖 If the AC motor drive is controlled by RS-485 serial communication, the communication address for this drive must be set via this parameter and each AC motor drive's communication address must be different.

✓ 09-01 COM1 Transmission Speed

Factory Setting: 9.6

Settings 4.8~115.2Kbits/s

📖 This parameter is for set up the RS485 communication transmission speed.

✓ 09-02 COM1 Transmission Fault Treatment

Factory Setting: 3

Settings
0: Warn and keep operation
1: Warn and ramp to stop
2: Warn and coast to stop
3: No warning and continue operation

📖 This parameter is to set the reaction of MODBUS transmission errors with the host. Detection time can be set in Pr09-03.

✓ 09-03 COM1 Time-out Detection

Factory Setting: 0.0

Settings 0.0~100.0 sec
0.0: Disable

📖 It is used to set the communication transmission time-out..

✓ 09-04 COM1 Communication Protocol

Factory Setting: 1

Settings
1: 7, N, 2 for ASCII
2: 7, E, 1 for ASCII
3: 7, O, 1 for ASCII
4: 7, E, 2 for ASCII
5: 7, O, 2 for ASCII
6: 8, N, 1 for ASCII
7: 8, N, 2 for ASCII
8: 8, E, 1 for ASCII

9: 8, O, 1 for ASCII
10: 8, E, 2 for ASCII
11: 8, O, 2 for ASCII
12: 8, N, 1 for RTU
13: 8, N, 2 for RTU
14: 8, E, 1 for RTU
15: 8, O, 1 for RTU
16: 8, E, 2 for RTU
17: 8, O, 2 for RTU

- Control by PC or PLC (Computer Link)
- A VFD-C2000 can be set up to communicate on Modbus networks using one of the following modes: ASCII (American Standard Code for Information Interchange) or RTU (Remote Terminal Unit).Users can select the desired mode along with the RS-485 serial port communication protocol in Pr.09-00.
- MODBUS ASCII（American Standard Code for Information Interchange）: Each byte data is the combination of two ASCII characters. For example, a 1-byte data: 64 Hex, shown as ‘64’ in ASCII, consists of ‘6’ (36Hex) and ‘4’ (34Hex).

1. Code Description

Communication protocol is in hexadecimal, ASCII: ”0”, “9”, “A”, “F”, every 16 hexadecimal represent ASCII code. For example:

Character	‘0’	‘1’	‘2’	‘3’	‘4’	‘5’	‘6’	‘7’
ASCII code	30H	31H	32H	33H	34H	35H	36H	37H

Character	‘8’	‘9’	‘A’	‘B’	‘C’	‘D’	‘E’	‘F’
ASCII code	38H	39H	41H	42H	43H	44H	45H	46H

2. Data Format

10-bit character frame (For ASCII):

（7, N , 2）

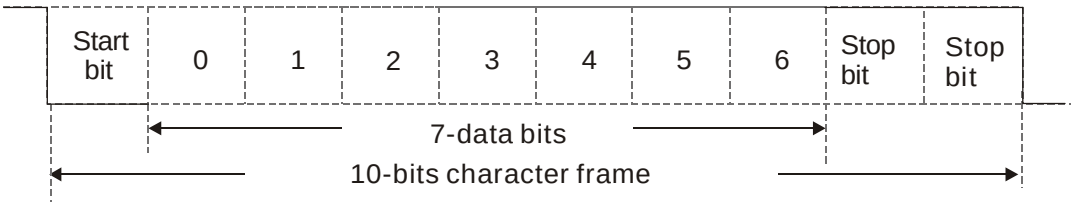

（7 , E , 1）

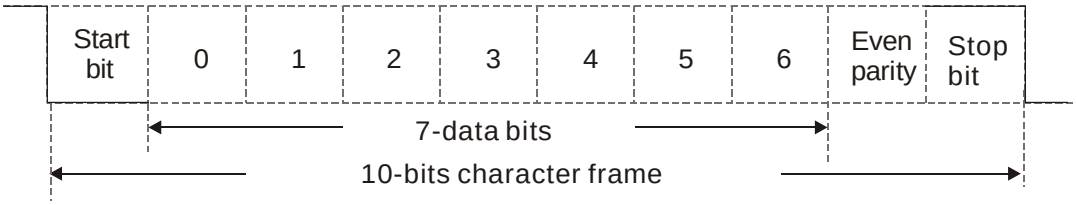

（7 , O , 1）

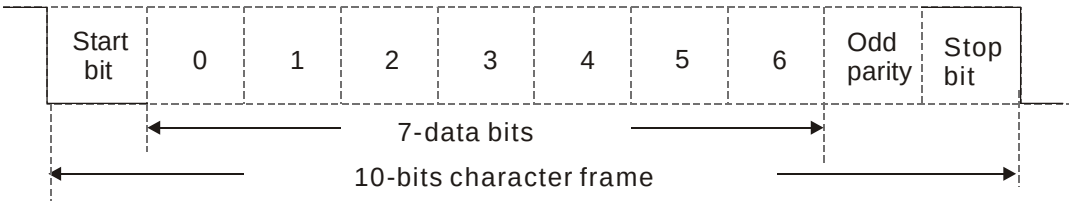

11-bit character frame (For RTU):

（8 , N , 2）

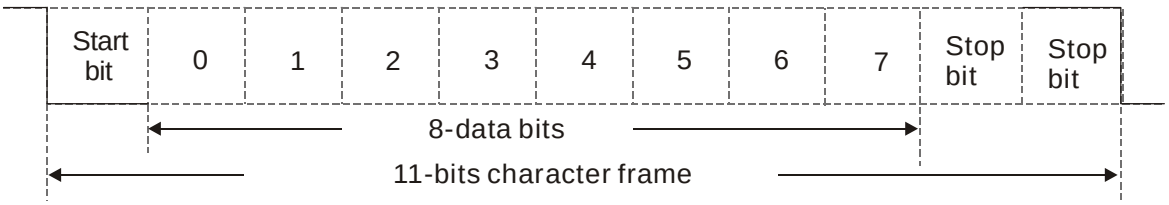

（8 , E , 1）

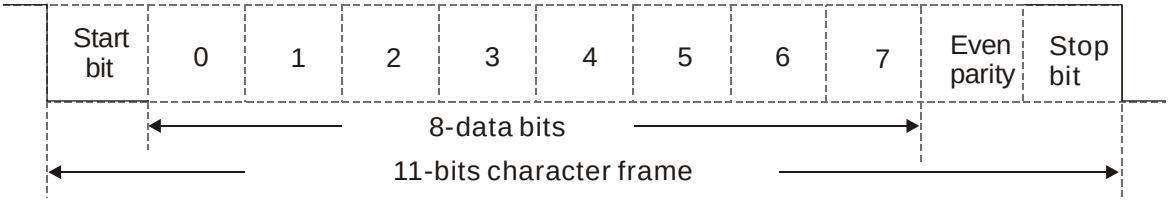

（8 , O , 1）

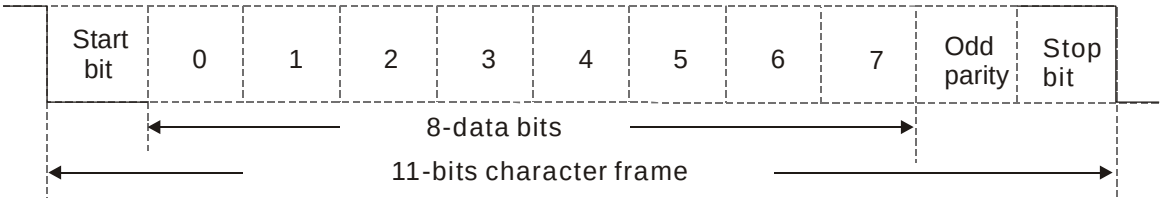

3. Communication Protocol

Communication Data Frame: **ASCII mode**

STX	Start character = ':' (3AH)
Address Hi	Communication address: 8-bit address consists of 2 ASCII codes
Address Lo	
Function Hi	Command code: 8-bit command consists of 2 ASCII codes
Function Lo	
DATA (n-1)	Contents of data: Nx8-bit data consist of 2n ASCII codes n<=16, maximum of 32 ASCII codes
…….	
DATA 0	
LRC CHK Hi	LRC check sum: 8-bit check sum consists of 2 ASCII codes
LRC CHK Lo	
END Hi	End characters: END1= CR (0DH), END0= LF(0AH)
END Lo	

Communication Data Frame: **RTU** mode

START	A silent interval of more than 10 ms
Address	Communication address: 8-bit address
Function	Command code: 8-bit command
DATA (n-1)	Contents of data: n×8-bit data, n<=16
…….	
DATA 0	
CRC CHK Low	CRC check sum: 16-bit check sum consists of 2 8-bit characters
CRC CHK High	
END	A silent interval of more than 10 ms

Address (Communication Address)

Valid communication addresses are in the range of 0 to 254. A communication address equal to 0, means broadcast to all AC drives (AMD). In this case, the AMD will not reply any message to the master device.

00H: broadcast to all AC drives
01H: AC drive of address 01
0FH: AC drive of address 15
10H: AC drive of address 16
:
FEH: AC drive of address 254

Function (Function code) and DATA (data characters)

The format of data characters depends on the function code.

03H: read data from register

06H: write single register

Example: reading continuous 2 data from register address 2102H, AMD address is 01H.

ASCII mode:

Command Message:

STX	‘:’
Address	‘0’
	‘1’
Function	‘0’
	‘3’
Starting register	‘2’
	‘1’
	‘0’
	‘2’
Number of register (count by word)	‘0’
	‘0’
	‘0’
	‘2’
LRC Check	‘D’
	‘7’
END	CR
	LF

Response Message

STX	‘:’
Address	‘0’
	‘1’
Function	‘0’
	‘3’
Number of register (count by byte)	‘0’
	‘4’
Content of starting register 2102H	‘1’
	‘7’
	‘7’
	‘0’
Content of register 2103H	‘0’
	‘0’
	‘0’
	‘0’
LRC Check	‘7’
	‘1’
END	CR
	LF

RTU mode:

Command Message:

Address	01H
Function	03H
Starting data register	21H
	02H
Number of register (count by world)	00H
	02H
CRC CHK Low	6FH
CRC CHK High	F7H

Response Message

Address	01H
Function	03H
Number of register (count by byte)	04H
Content of register address 2102H	17H
	70H
Content of register address 2103H	00H
	00H
CRC CHK Low	FEH
CRC CHK High	5CH

06H: single write, write single data to register.
Example: writing data 6000(1770H) to register 0100H. AMD address is 01H.

ASCII mode:

Command Message:

STX	':'
Address	'0'
	'1'
Function	'0'
	'6'
Target register	'0'
	'1'
	'0'
	'0'
Register content	'1'
	'7'
	'7'
	'0'
LRC Check	'7'
	'1'
END	CR
	LF

Response Message

STX	':'
Address	'0'
	'1'
Function	'0'
	'6'
Target register	'0'
	'1'
	'0'
	'0'
Register content	'1'
	'7'
	'7'
	'0'
LRC Check	'7'
	'1'
END	CR
	LF

RTU mode:

Command Message:

Address	01H
Function	06H
Target register	01H
	00H
Register content	17H
	70H
CRC CHK Low	86H
CRC CHK High	22H

Response Message

Address	01H
Function	06H
Target register	01H
	00H
Register content	17H
	70H
CRC CHK Low	86H
CRC CHK High	22H

10H: write multiple registers (write multiple data to registers) (at most 20 sets of data can be written simultaneously)
Example: Set the multi-step speed,
Pr.04-00=50.00 (1388H), Pr.04-01=40.00 (0FA0H). AC drive address is 01H.

ASCII Mode

Command Message:

STX	':'
ADR 1	'0'
ADR 0	'1'
CMD 1	'1'
CMD 0	'0'
Target register	'0'
	'5'
	'0'
	'0'
Number of register (count by word)	'0'
	'0'
	'0'
	'2'
Number of register (count by Byte)	'0'
	'4'
The first data content	'1'
	'3'
	'8'
	'8'
The second data content	'0'
	'F'
	'A'
	'0'
LRC Check	'9'
	'A'
END	CR
	LF

Response Message

STX	':'
ADR 1	'0'
ADR 0	'1'
CMD 1	'1'
CMD 0	'0'
Target register	'0'
	'5'
	'0'
	'0'
Number of register (count by word)	'0'
	'0'
	'0'
	'2'
LRC Check	'E'
	'8'
END	CR
	LF

RTU mode:

Command Message:

ADR	01H
CMD	10H
Target register	05H
	00H
Number of register (Count by word)	00H
	02H
Quantity of data (Byte)	04
The first data content	13H
	88H
The second data content	0FH
	A0H
CRC Check Low	'9'
CRC Check High	'A'

Response Message:

ADR	01H
CMD 1	10H
Target register	05H
	00H
Number of register (Count by word)	00H
	02H
CRC Check Low	41H
CRC Check High	04H

Check sum

ASCII mode:

LRC (Longitudinal Redundancy Check) is calculated by summing up, module 256, and the values of the bytes from ADR1 to last data character then calculating the hexadecimal representation of the 2's-complement negation of the sum.

For example,

01H+03H+21H+02H+00H+02H=29H, the 2's-complement negation of 29H is **D7**H.

RTU mode:

CRC (Cyclical Redundancy Check) is calculated by the following steps:

Step 1:

Load a 16-bit register (called CRC register) with FFFFH.

Step 2:

Exclusive OR the first 8-bit byte of the command message with the low order byte of the 16-bit CRC register, putting the result in the CRC register.

Step 3:

Examine the LSB of CRC register.

Step 4:

If the LSB of CRC register is 0, shift the CRC register one bit to the right with MSB zero filling, then repeat step 3. If the LSB of CRC register is 1, shift the CRC register one bit to the right with MSB zero filling, Exclusive OR the CRC register with the polynomial value A001H, then repeat step 3.

Step 5:

Repeat step 3 and 4 until eight shifts have been performed. When this is done, a complete 8-bit byte will have been processed.

Step 6:

Repeat step 2 to 5 for the next 8-bit byte of the command message. Continue doing this until all bytes have been processed. The final contents of the CRC register are the CRC value. When transmitting the CRC value in the message, the upper and lower bytes of the CRC value must be swapped, i.e. the lower order byte will be transmitted first.

The following is an example of CRC generation using C language. The function takes two arguments:

Unsigned char* data ← a pointer to the message buffer

Unsigned char length ← the quantity of bytes in the message buffer

The function returns the CRC value as a type of unsigned integer.

Unsigned int crc_chk(unsigned char* data, unsigned char length)

```
{
        int j;
        unsigned int reg_crc=0Xffff;
        while(length--){
                reg_crc ^= *data++;
                for(j=0;j<8;j++){
                        if(reg_crc & 0x01){    /* LSB(b0)=1 */
                                reg_crc=(reg_crc>>1) ^ 0Xa001;
                        }else{
                                reg_crc=reg_crc >>1;
                        }
                }
        }
        return reg_crc;                         // return register CRC
}
```

4. Address list

Content	Register	Function	
AC drive parameters	GGnnH	GG means parameter group, nn means parameter number, for example, the address of Pr 4-01 is 0401H.	
Command write only	2000H	Bit1~0	00B：No function
			01B：Stop
			10B：Run
			11B：JOG+RUN
		Bit3~2	Reserved
		Bit5~4	00B：No function
			01B：FWD
			10B：REV
			11B：Change direction
		Bit7~6	00B：1st accel/decel.
			01B：2nd accel/decel
			10B：3rd accel/decel
			11B：4th accel/decel
		Bit11~8	000B: master speed
			0001B: 1st Step Speed Frequency
			0010B: 2nd Step Speed Frequency
			0011B: 3rd Step Speed Frequency
			0100B: 4th Step Speed Frequency
			0101B: 5th Step Speed Frequency
			0110B: 6th Step Speed Frequency
			0111B: 7th Step Speed Frequency
			1000B: 8th Step Speed Frequency
			1001B: 9th Step Speed Frequency
			1010B: 10th Step Speed Frequency
			1011B: 11th Step Speed Frequency
			1100B: 12th Step Speed Frequency

Content	Register	Function	
			1101B: 13th Step Speed Frequency
			1110B: 14th Step Speed Frequency
			1111B: 15th Step Speed Frequency
		Bit12	1: Enable bit06-11 function
		Bit14~13	00B：No function
			01B：Operated by digital keypad
			10B：Operated by Pr.00-21 setting
			11B：Change operation source
		Bit15	Reserved
	2001H	Frequency command(XXX.XXHz)	
	2002H	Bit0	1：EF (external fault) on
		Bit1	1：Reset
		Bit2	1：B.B ON
		Bit15~3	Reserved
Status monitor read only	2100H	High byte: Warn Code Low Byte: Error Code	
	2101H	Bit1~0	AC Drive Operation Status 00B: Drive stops 01B: Drive decelerating 10B: Drive standby 11B: Drive operating
		Bit2	1：JOG Command
		Bit4~3	Operation Direction 00B: FWD run 01B: From REV run to FWD run 10B: REV run 11B: From FWD run to REV run
		Bit8	1：Master frequency controlled by communication interface
		Bit9	1：Master frequency controlled by analog signal
		Bit10	1：Operation command controlled by communication interface
		Bit11	1：Parameter locked
		Bit12	1：Enable to copy parameters from keypad
		Bit15~13	Reserved
	2102H	Frequency command （XXX.XX Hz）	
	2103H	Output frequency （XXX.XX Hz）	
	2104H	Output current（XX.XXA）. When current is higher than 655.35,it will shift decimal as（XXX.XA）. The decimal can refer to High byte of 211F.	
	2105H	DC-BUS Voltage （XXX.XV）	
	2106H	Output voltage（XXX.XV）	
	2107H	Current step number of Multi-Step Speed Operation	
	2108H	Reserved	
	2109H	Counter value	
	210AH	Power Factor Angle (XXX.X)	
	210BH	Output Torque （XXX.X%）	
	210CH	Actual motor speed（XXXXXrpm)	
	210DH	Number of PG feed back pulses（0~65535）	
	210EH	Number of PG2 pulse commands（0~65535）	
	210FH	Power output （X.XXX KWH）	
	2116H	Multi-function display (Pr.00-04)	

Content	Register	Function
	211BH	Max. opeartion frequency (Pr.01-00) or Max. user defined value (Pr.00-26) When Pr00-26 is 0, this value is equal to Pr01-00 setting When Pr00-26 is not 0, and the command source is Keypad, this value = Pr00-24 * Pr00-26 / Pr01-00 When Pr00-26 is not 0, and the command source is 485, this value = Pr09-10 * Pr00-26 / Pr01-00
	211FH	High byte: decimal of current value (display)
	2200H	Display output current (A). When current is higher than 655.35,it will shift decimal as（XXX.XA）. The decimal can refer to High byte of 211F.
	2201H	Display counter value (c)
	2202H	Actual output frequency（XXXXXHz）
	2203H	DC-BUS voltage（XXX.XV）
	2204H	Output voltage（XXX.XV）
	2205H	Power angle（XXX.X）
	2206H	Display actual motor speed kW of U, V, W（XXXXXkW）
	2207H	Display motor speed in rpm estimated by the drive or encoder feedback（XXXXXrpm）
	2208H	Display positive/negative output torque in %, estimated by the drive (t0.0: positive torque, -0.0: negative torque)（XXX.X%）
	2209H	Display PG feedback (as Pr. 00-04 NOTE 1)
	220AH	PID feedback value after enabling PID function（XXX.XX%）
	220BH	Display signal of AVI analog input terminal, 0-10V corresponds to 0.00~100.00% (1.) (as Pr. 00-04 NOTE 2)
	220CH	Display signal of ACI analog input terminal, 4-V20mA/0-10V corresponds to 0.00~100.00% (2.) (as Pr. 00-04 NOTE 2)
	220DH	Display signal of AUI analog input terminal, -10V~10V corresponds to -100.00~100% (3.) (as Pr. 00-04 NOTE 2)
	220EH	IGBT temperature of drive power module （XXX.X℃）
	220FH	The temperature of capacitance （XXX.X℃）
	2210H	The status of digital input (ON/OFF), refer to Pr.02-12 (as Pr. 00-04 NOTE 3)
	2211H	The status of digital output (ON/OFF), refer to Pr.02-18 (as Pr. 00-04 NOTE 4)
	2212H	The multi-step speed that is executing (S)
	2213H	The corresponding CPU pin status of digital input (d.) (as Pr. 00-04 NOTE 3)
	2214H	The corresponding CPU pin status of digital output (O.) (as Pr. 00-04 NOTE 4)
	2215H	Number of actual motor revolution (PG1 of PG card) (P.) it will start from 9 when the actual operation direction is changed or keypad display at stop is 0. Max. is 65535
	2216H	Pulse input frequency (PG2 of PG card)（XXX.XXHz）
	2217H	Pulse input position (PG card PG2), maximum setting is 65535.
	2218H	Position command tracing error
	2219H	Display times of counter overload（XXX.XX%）
	221AH	GFF（XXX.XX%）
	221BH	DCbus voltage ripples（XXX.XV）
	221CH	PLC register D1043 data (C)
	221DH	Pole of Permanent Magnet Motor
	221EH	User page displays the value in physical measure
	221FH	Output Value of Pr.00-05（XXX.XXHz）

Content	Register	Function
	2220H	Number of motor tunrns when drive operates (keeping when drive stops, and reset to zero when operation)
	2221H	Opeartion position of motor (keeping when drive stops, and reset to zero when operation)
	2222H	Fan speed of the drive（XXX%）
	2223H	Control mode of the drive 0: speed mode 1: torque mode
	2224H	Carrier frequency of the drive（XXKHZ）
	2225H	Reserve
	2226H	Drive status bit 1~0 00b: No direction 01b: Forward 10b: Reverse bit 3~2 01b: Driver ready 10b: Error bit 4 0b: Motor drive did not output 1b: Motor drive did output bit 5 0b: No alarm 1b: Have Alarm
	2227H	Drive's estimated output torque(positive or negative direction)（XXXX Nt-m）
	2228H	Torque command（XXX.X%）
	2229H	KWH display（XXXX.X）
	222AH	PG2 pulse input in Low Word
	222BH	PG2 pulse input in High Word
	222CH	Motor actual position in Low Word
	222DH	Motor actual position in High Word
	222EH	PID reference（XXX.XX%）
	222FH	PID offset（XXX.XX%）
	2230H	PID output frequency（XXX.XXHz）

5. Exception response:

The AC motor drive is expected to return a normal response after receiving command messages from the master device. The following depicts the conditions when no normal response is replied to the master device.

The AC motor drive does not receive the messages due to a communication error; thus, the AC motor drive has no response. The master device will eventually process a timeout condition.

The AC motor drive receives the messages without a communication error, but cannot handle them. An exception response will be returned to the master device and an error message "CExx" will be displayed on the keypad of AC motor drive. The xx of "CExx" is a decimal code equal to the exception code that is described below.

In the exception response, the most significant bit of the original command code is set to 1, and an exception code which explains the condition that caused the exception is returned.

Example:

ASCII mode:

STX	':'
Address	'0'
	'1'
Function	'8'
	'6'
Exception code	'0'
	'2'
LRC CHK	'7'
	'7'
END	CR
	LF

RTU mode:

Address	01H
Function	86H
Exception code	02H
CRC CHK Low	C3H
CRC CHK High	A1H

The explanation of exception codes:

Exception code	Explanation
1	Function code is not supported or unrecognized.
2	Address is not supported or unrecognized.
3	Data is not correct or unrecognized.
4	Fail to execute this function code

09-05 ~ 09-08	Reserved

09-09 Response Delay Time

Factory Setting: 2.0

Settings 0.0~200.0ms

This parameter is the response delay time after AC drive receives communication command as shown in the following.

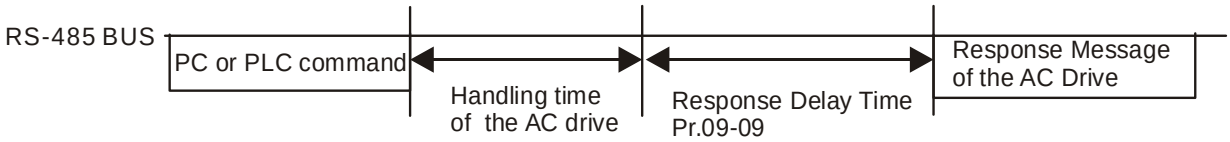

09-10 Main Frequency of the Communication

Factory Setting: 60.00

Settings 0.00~599.00Hz

When Pr.00-20 is set to 1 (RS485 communication). The AC motor drive will save the last frequency command into Pr.09-10 when abnormal turn-off or momentary power loss. After reboots the power, it will regard the frequency set in Pr.09-10 if no new frequency command is inputted. When frequence command of 485 is changed (the source of frequence command needs to be set as MODBUS), this parameter is also be changed.

09-11	Block Transfer 1
09-12	Block Transfer 2
09-13	Block Transfer 3
09-14	Block Transfer 4
09-15	Block Transfer 5
09-16	Block Transfer 6
09-17	Block Transfer 7
09-18	Block Transfer 8
09-19	Block Transfer 9
09-20	Block Transfer 10
09-21	Block Transfer 11
09-22	Block Transfer 12
09-23	Block Transfer 13
09-24	Block Transfer 14

09-25	Block Transfer 15
09-26	Block Transfer 16

Factory Setting: 0

Settings 0~65535

There is a group of block transfer parameter available in the AC motor drive (Pr.09-11 to Pr.09-26). Through communication code 03H, user can use them (Pr.09-11 to Pr.09-26) to save those parameters that you want to read.

09-27 ~ 09-29	Reserved

09-30	Communication Decoding Method

Factory Setting: 1

Settings 0: Decoding Method 1 (20xx)
1: Decoding Method 2 (60xx)

		Decoding Method 1	Decoding Method 2
Source of Operation Control	Digital Keypd	Digital keypad controls the drive action regardless decoding method 1 or 2.	
	External Terminal	External terminal controls the drive action regardless decoding method 1 or 2.	
	RS-485	Refer to address: 2000h~20FFh	Refer to address: 6000h ~ 60FFh
	CANopen	Refer to index: 2020-01h~2020-FFh	Refer to index:2060-01h ~ 2060-FFh
	Communication Card	Refer to address: 2000h ~ 20FFh	Refer to address: 6000h ~ 60FFh
	PLC	PLC commands the drive action regardless decoding method 1 or 2.	

09-31	Internal Communication Protocol

Factory Setting: 0

Settings 0: Modbus 485
-1: Internal Communication Slave 1
-2: Internal Communication Slave 2
-3: Internal Communication Slave 3
-4: Internal Communication Slave 4
-5: Internal Communication Slave 5
-6: Internal Communication Slave 6
-7: Internal Communication Slave 7
-8: Internal Communication Slave 8
-9: Reserve
-10: Internal Communication Master
-11: Reserve
-12: Internal PLC Control

When it is defined as internal communication, see CH16-10 for information on Main Control Terminal of Internal Communication.

When it is defined as internal PLC control, see CH16-12 for Remote IO control application (by using MODRW).

09-32 09-34	Reserved

09-33 PLC command force to 0

Factory Setting：0

Setting 0~65535

It defines the action that before PLC scans time sequence, the frequence command or speed command needs to be cleared as 0 or not.

Bit	Explanation
Bit0	Before PLC scan, set up PLC target frequency=0
Bit1	Before PLC scan, set up the PLC target torque=0
Bit2	Before PLC scan, set up the speed limit of torque control mode=0

09-35 PLC Address

Factory Setting: 2

Settings 1~254

09-36 CANopen Slave Address

Factory Setting: 0

Settings 0: Disable
1~127

09-37 CANopen Speed

Factory Setting: 0

Settings 0: 1M bps
1: 500K bps
2: 250K bps
3: 125K bps
4: 100K bps (Delta only)
5: 50K bps

09-38 Reserved

09-39 CANopen Warning Record

Factory Setting: Read only

Settings bit 0: CANopen Guarding Time out
bit 1: CANopen Heartbeat Time out
bit 2: CANopen SYNC Time out
bit 3: CANopen SDO Time out
bit 4: CANopen SDO buffer overflow
bit 5: Can Bus Off
bit 6: Error protocol of CANOPEN
bit 7: Reserved
bit 8: The setting values of CANopen indexs are fail
bit 9: The setting value of CANopen address is fail
bit10: The checksum value of CANopen indexs is fail

09-40	CANopen Decoding Method

Factory Setting: 1

Settings 0: Delta defined decoding method
1: CANopen Standard DS402 protocol

09-41	CANopen Status

Factory Setting: 0

Settings 0: Node Reset State
1: Com Reset State
2: Boot up State
3: Pre Operation State
4: Operation State
5: Stop State

09-42	CANopen Control Status

Factory Setting: Read Only

Settings 0: Not ready for use state
1: Inhibit start state
2: Ready to switch on state
3: Switched on state
4: Enable operation state
7: Quick stop active state
13: Err reaction activation state
14: Error state

09-43	Reserved
09-44	Reserved

09-45	CANopen Master Function

Factory Setting: 0

Settings 0: Disable
1: Enable

09-46	CANopen Master Address

Factory Setting: 100

Settings 0~127

09-47 ~ 09-59	Reserved

09-60 Identifications for Communication Card

Factory Setting: ##

Settings 0: No communication card
1: DeviceNet Slave
2: Profibus-DP Slave
3: CANopen Slave/Master
4: Modbus-TCP Slave
5: EtherNet/IP Slave
6~8: Reserved

09-61 Firmware Version of Communication Card

Factory Setting: ##

Settings Read only

09-62 Product Code

Factory Setting: ##

Settings Read only

📖 Different communication cards have their own product codes with different value.
DeviceNet: As it connects to different kind of motor drive, it will have different product code.
Profibus: ID number of a communication card. Each Profibus selling in the market must apply for an ID number at the Profibus International to be a unique product.

09-63 Fault Code

Factory Setting: ##

Settings Read only

📖 For more information about Fault codes, refer to Pr. 06-17~06-22 and Chapter 14.

09-64 ~ **09-69** Reserved

09-70 Address of Communication Card (for DeviceNet and PROFIBUS)

Factory Setting: 1

Settings DeviceNet: 0-63
Profibus-DP: 1-125

09-71 Setting of DeviceNet Speed (according to Pr.09-72) (for DeviceNet and PROFIBUS)

Factory Setting: 2

Settings Standard DeviceNet:
0: 125Kbps
1: 250Kbps
2: 500Kbps
Non standard DeviceNet: (Delta only)
0: 10Kbps
1: 20Kbps

2: 50Kbps
3: 100Kbps
4: 125Kbps
5: 250Kbps
6: 500Kbps
7: 800Kbps
8: 1Mbps

09-72	Other Setting of DeviceNet Speed (for DeviceNet and PROFIBUS)

Factory Setting: 0

Settings 0: Standard DeviceNet
1: Non standard DeviceNet

- It needs to use with Pr.09-71.
- Setting 0: the baud rate can only be set to 0, 1, 2 or 3.
- Setting 1: setting of DeviceNet communication rate can be the same as CANopen (setting 0-8).

09-73	Reserved
09-74	Reserved

09-75	IP Configuration of the Communication Card (for MODBUS TCP)

Factory Setting: 0

Settings 0: Static IP
1: DynamicIP (DHCP)

- Setting 0: it needs to set IP address manually.
- Setting 1: IP address will be auto set by host controller.

09-76	IP Address 1 of the Communication Card (for MODBUS TCP)
09-77	IP Address 2 of the Communication Card (for MODBUS TCP)
09-78	IP Address 3 of the Communication Card (for MODBUS TCP)
09-79	IP Address 4 of the Communication Card (for MODBUS TCP)

Factory Setting: 0

Settings 0~65535

- Pr.09-76~09-79 needs to use with communication card.

09-80	Address Mask 1 of the Communication Card (for MODBUS TCP)
09-81	Address Mask 2 of the Communication Card (for MODBUS TCP)
09-82	Address Mask 3 of the Communication Card (for MODBUS TCP)
09-83	Address Mask 4 of the Communication Card (for MODBUS TCP)

Factory Setting: 0

Settings 0~65535

09-84	Getway Address 1 of the Communication Card (for MODBUS TCP)
09-85	Getway Address 2 of the Communication Card (for MODBUS TCP)
09-86	Getway Address 3 of the Communication Card (for MODBUS TCP)
09-87	Getway Address 4 of the Communication Card (for MODBUS TCP)

Factory Setting: 0

Settings 0~65535

09-88	Password for Communication Card (Low word) (for MODBUS TCP)
09-89	Password for Communication Card (High word) (for MODBUS TCP)

Factory Setting: 0

Settings 0~99

09-90	Reset Communication Card (for MODBUS TCP)

Factory Setting: 0

Settings 0: Disable

1: Reset, return to factory setting

09-91	Additional Setting for Communication Card (for MODBUS TCP)

Factory Setting: 1

Settings Bit 0: Enable IP Filter

Bit 1: Internet parameters enable(1bit)

When IP address is set up, this bit need to be enabled to write down the parameters. This bit will change to disable when it finishes saving the update of internet parameters.

Bit 2: Login password enable(1bit)

When enter login password, this bit will be enabled. After updating the parameters of communication card, this bit will change to disable.

09-92	Status of Communication Card (for MODBUS TCP)

Factory Setting: 0

Settings Bit 0: password enable

When the communication card is set with password, this bit is enabled. When the password is clear, this bit is disabled.

10 Speed Feedback Control Parameters

⚡ This parameter can be set during operation.

In this parameter group, ASR is the abbreviation for Adjust Speed Regulator and PG is the abbreviation for Pulse Generator.

10-00 Encoder Type Selection

Factory Setting: 0

Settings
0: Disable
1: ABZ
2: ABZ (Delta encoder for Delta Servo motor)
3: Resolver
4: ABZ/UVW
5. MI8 single phase pulse input

- For PG extension card EMC-PG01L and EMC-PG01O, set Pr.10-00=1. These extension cards are for IM motor only.
- For EMC-PG01U, when setting Pr.10-00=2 (Delta encoder) make sure SW1 is switched to D (Delta type). If the setting for Pr.10-00, 10-01 and 10-02 has changed, please turn off the drive's power and reboots to prevent PM motor stall. This mode is suggested for PM motor.
- For EMC-PG01R, when setting Pr.10-00=3 please also input 1024 ppr.
- For EMC-PG01U, when setting Pr.10-00=4 (Standard ABZ/UVW Encoder) make sure SW1 is switched to S (Standard Type). This mode is applicable for both IM and PM motor.
- When using MI8 single phase pulse input as frequency command, the Pr10-02 must set "5: Single-phase input". This only can be use with VF, VFPG, SVC, IM/PM FOC Sensor-less, IM/PM TQC Sensor-less control mode.
- When using MI8 single phase pulse as speed feedback, the drive must at VFPG control mode only.

10-01 Encoder Pulse

Factory Setting: 600

Settings 1~20000

- A Pulse Generator (PG) or encoder is used as a sensor that provides a feedback signal of the motor speed. This parameter defines the number of pulses for each cycle of the PG control, i.e. the number of pulses for a cycle of A phase/B phase.
- This setting is also the encoder resolution. With the higher resolution, the speed control will be more accurate.
- An incorrect input to Pr.10-00 may result drive over current, motor stall, PM motor magnetic pole origin detection error. If Pr.10-00 setting has changed, please trace the magnetic pole again, set Pr.05-00=4 (static test for PM motor magnetic pole and PG origin again).

10-02 Encoder Input Type Setting

Factory Setting: 0

Settings 0: Disable

1: Phase A leads in a forward run command and phase B leads in a reverse run command

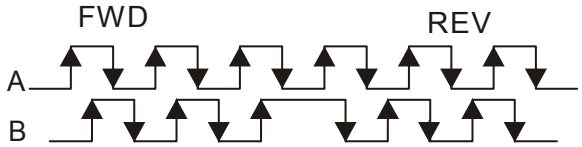

2: Phase B leads in a forward run command and phase A leads in a reverse run command

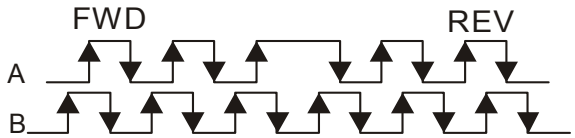

3: Phase A is a pulse input and phase B is a direction input. (L =reverse direction, H=forward direction)

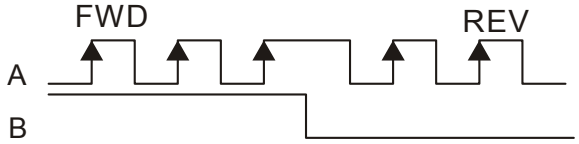

4: Phase A is a pulse input and phase B is a direction input. (L=forward direction, H=reverse direction)

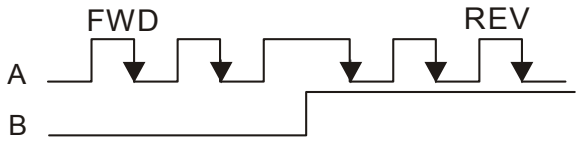

5: Single-phase input

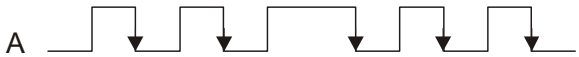

10-03 Output Setting for Frequency Division (denominator)

Factory Setting: 1

Settings 1~255

This parameter is used to set the denominator for frequency division (for PG card EMC-PG01L or EMC-PG01O). For example, when it is set to 2 with feedback 1024ppr, PG output will be 1024/2=512ppr.

10-04 Electrical Gear at Load Side A1

10-05 Electrical Gear at Motor Side B1

10-06 Electrical Gear at Load Side A2

10-07 Electrical Gear at Motor Side B2

Factory Setting: 100

Settings 1~65535

Parameters 10-04 to 10-07 can be used with the multi-function input terminal (set to 48) to switch to Pr.10-04~10-05 or Pr.10-06~10-07 as shown as follows

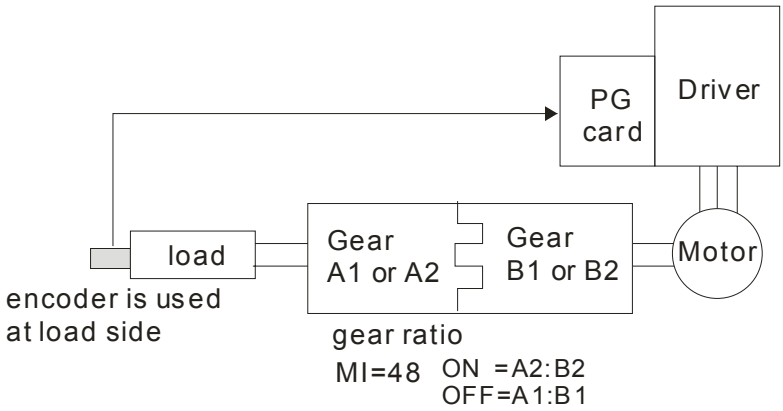

10-08 Treatment for Encoder/ Speed Observer Feedback Fault

Factory Setting: 2

Settings 0: Warn and keep operating
1: Warn and RAMP to stop
2: Warn and COAST to stop

10-09 Detection Time of Encoder/ Speed Observer Feedback Fault

Factory Setting: 1.0

Settings 0.0~10.0 sec
0: No function

When encoder loss, encoder signal error, pulse signal setting error or signal error, if time exceeds the detection time for encoder feedback fault (Pr.10-09), the encoder signal error will occur. Refer to the Pr.10-08 for encoder feedback fault treatment.

When speed controller signal is abnormal, if time exceeds the detection time for encoder speed controller fault (Pr.10-09), the feedback fault will occur. Refer to the Pr.10-08 for encoder feedback fault treatment.

10-10 Encoder/ Speed Observer Stall Level

Factory Setting: 115

Settings 0~120%
0: No function

This parameter determines the maximum encoder feedback signal allowed before a fault occurs. (Max. output frequency Pr.01-00 =100%)

10-11 Detection Time of Encoder/ Speed Observer Stall

Factory Setting: 0.1

Settings 0.0~2.0 sec

10-12 Treatment for Encoder/ Speed Observer Stall

Factory Setting: 2

Settings 0: Warn and keep operation
1: Warn and ramp to stop
2: Warn and coast to stop

When the motor drive output frequency exceeds Pr.1

10-13 Encoder/ Speed Observer Slip Range

Factory Setting: 50

Settings 0~50%
0: Disable

10-14 Detection Time of Encoder/ Speed Observer Slip

Factory Setting: 0.5

Settings 0.0~10.0 sec

10-15 Treatment for Encoder/ Speed Observer Stall and Slip Error

Factory Setting: 2

Settings 0: Warn and keep operation
1: Warn and ramp to stop
2: Warn and coast to stop

Action principle of Pr10-13~Pr10-15:
When the value of (rotation speed – motor frequency) exceeds Pr.10-13 setting, detection time exceeds Pr.10-14; it will start to accumulate time. If detection time exceeds Pr.10-14, the encoder feedback signal error will occur. Refer to Pr.10-15 encoder stall and slip error treatment.

10-16 Pulse Input Type Setting (PG card: PG2)

Factory Setting: 0

Settings 0: Disable
1: Phase A leads in a forward run command and phase B leads in a reverse run command

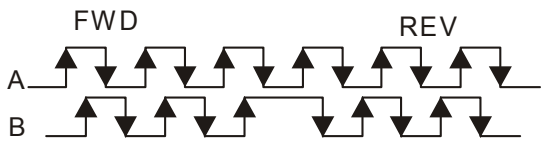

2: Phase B leads in a forward run command and phase A leads in a reverse run command

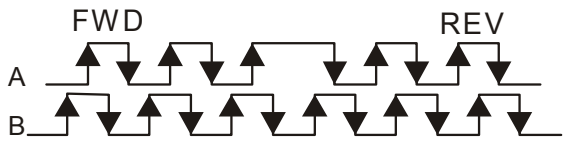

3: Phase A is a pulse input and phase B is a direction input. (L=reverse direction, H=forward direction)

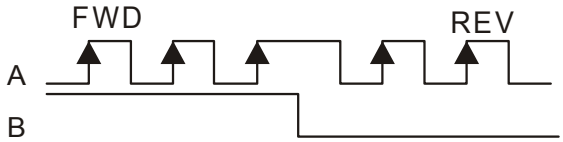

4: Phase A is a pulse input and phase B is a direction input. (L=forward direction, H=reverse direction)

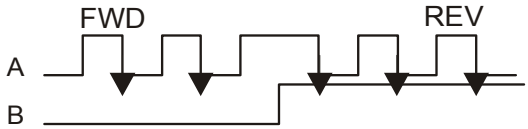

- When this setting is different from Pr.10-02 setting and the source of the frequency command is pulse input (Pr.00-20 is set to 4 or 5), it may have 4 times frequency problem.
  Example: Assume that Pr.10-01=1024, Pr.10-02=1, Pr.10-16=3, Pr.00-20=5, MI=37 and ON, it needs 4096 pulses to rotate the motor a revolution.
- Assume that Pr.10-01=1024, Pr.10-02=1, Pr.10-16=1, Pr.00-20=5, MI=37 and ON, it needs 1024 pulses to rotate the motor a revolution.
- Position control diagram

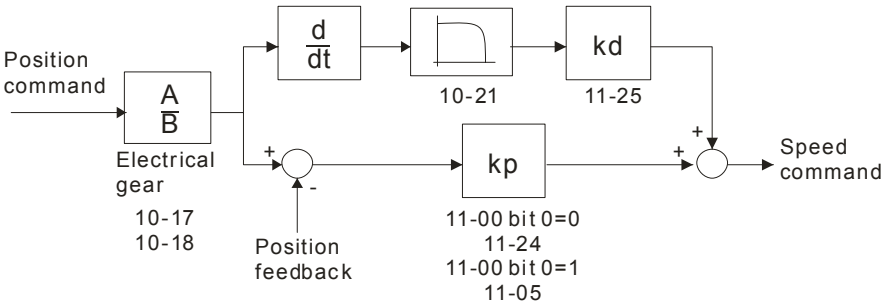

10-17 Electrical Gear A

10-18 Electrical Gear B

Factory Setting: 100

Settings 1~65535

- Rotation speed = pulse frequency/encoder pulse (Pr.10-01) * PG Electrical Gear A / PG Electrical Gear B.

10-19 Positioning for Encoder Position

Factory Setting: 0

Settings -32767~2400

- This parameter determines the internal position in the position mode.
- It needs to be used with multi-function input terminal setting =35 (enable position control).
- When it is set to 0, it is the Z-phase position of encoder.

10-20 Range for Encoder Position Attained

Factory Setting: 10

Settings 0~65535 pulse

This parameter determines the range for internal positioning position attained.

For example:

When the position is set by Pr.10-19 Positioning for Encoder Position and Pr.10-20 is set to 1000, it reaches the position if the position is within 990-1010 after finishing the positioning.

10-21 Filter Time (PG2)

Factory Setting: 0.100

Settings 0.000~65.535 sec

When Pr.00-20 is set to 5 and multi-function input terminal is set to 37 (OFF), the pulse command will be regarded as frequency command. This parameter can be used to suppress the jump of speed command.

10-22 Speed Mode (PG2)

Factory Setting: 0

Settings 0: Electronic Frequency

1: Mechanical Frequency (base on pole pair)

10-23 Reserved

10-24 FOC&TQC Function Control

Factory Setting: 0

Settings 0~65535

Bit#	Description
0	ASR control at sensorless torque 0:use PI as ASR; 1:use P as ASR
1~10	NA
11	Activate DC braking when executing zero torque command 0:ON , 1:OFF
12	FOC Sensorless mode, cross zero means speed goes from negative to positive or positive to negative (forward to reverse direction or reverse to forward direction). 0: determine by stator frequency , 1: determine by speed command
13	NA
14	NA
15	Direction control at open loop status 0: Switch ON direction control 1: Switch OFF direction control

Except Bit=0 set to be used in closed loop, other Bit settings are for open loop.

10-25 FOC Bandwidth of Speed Observer

Factory Setting:40.0

Settings 20.0~100.0Hz

Setting speed observer to higher bandwidth could shorten the speed response time but will create greater noise interference during the speed observation. .

10-26 FOC Minimum Stator Frequency

Factory Setting:2.0

Settings 0.0~10.0%fN

This parameter is used to set the minimum level of stator frequency at operation status. This setting ensures the stability and accuracy of observer and avoid interferences from voltage, current and motor parameter. fN is motor rated frequency.

10-27 FOC Low-pass Filter Time Constant

Factory Setting:50

Settings 1~1000ms

This parameter sets the low-pass filter time constant of a flux observer at start up. If the motor can not be activated during the high-speed operation, please lower the setting in this parameter.

10-28 FOC Gain of Excitation Current Rise Time

Factory Setting:100

Settings 33~100% Tr (Tr: rotor time constant)

This parameter sets the drive's excitation current rise time when activates at senslorless torque mode. When the drive's activation time is too long at torque mode, please adjust this parameter to a shorter time constant.

10-29 Top Limit of Frequency Deviation

Factory Setting: 20.00

Settings 0.00~200.00Hz

- Pr.10-29 is for setting the maximum of frequency deviation.
- When this parameter is set too large, resulting in abnormal PG feedback malfunction.
- If the application need higher setting of Pr10-29, please note that: Higher setting of Pr10-29 value will result in larger motor slip, which will cause PG Error (PGF3, PGF4) easily. In this case, set Pr10-10 and Pr10-13 as 0 will disable PGF3 and PGF4 detection, but it needs to make sure the PG wiring and application is correct. Or it may lose the instant PG protection. Too Higher Pr10-29 setting is not a common setting.

10-30 Resolver Pole Pair

Factory Setting: 1

Settings 1~50

To use Pr.10-30 function, user must set Pr.10-00=3(Resolver Encoder) first.

10-33 Reserved

10-38 Reserved

10-31 I/F Mode, current command

Factory Setting: 40

Settings 0~150% Irated (Rated current % of the motor)

10-32 PM Sensorless Obeserver Bandwith for High Speed Zone

Factory Setting: 5.00

Settings 0.00~600.00Hz

10-34 PM Sensorless Observer Low-pass Filter Gain

Factory Setting: 1.00

Settings 0.00~655.35

10-35 ARM (Kp)

Factory Setting: 1.00

Settings 0.00~3.00

10-36 ARM (Ki)

Factory Setting: 0.20

Settings 0.00~3.00

10-37 PM Sensorless Control Word

Factory Setting: 0000

Settings 0000~FFFFh

Bit No.	Function	Description
0	Reserved	
1	Reserved	
2	Choose a control mode to statrt.	0 :Start by IF mode 1: Start by VF mode
3	Choose a mode to stop .	0 :Stop by IF mode 1 :Stop by VF mode
4	Reserved	
5	Choose a control mode to stop	0 : When lower than Pr10-40, coast to stop 1 : When lower than Pr10-40, ramp to stop
6	Reserved	
7	Reserved	

10-39 Frequency Point when switch from I/F mode to PM Sensorless mode

Factory Setting: 20.00

Settings 0.00~599.00Hz

10-40 Frequency Point when switch from I/F Sensorless Observation mde to V/F mode

Factory Setting: 20.00

Settings 0.00~599.00Hz

10-41 I/F mode, low pass-filter time

Factory Setting: 0.2

Settings 0.0~6.0 sec

10-42 Initial Angle Detection Time

Factory Setting: 5

Settings 0.0~3.0

PM Sensorless (I/f + FOC) Adjustment Procedure

1. When executing Static test for PM(IPM) (05-00=13), VFD software can be used to monitor adjustment procedure. To download VFD Sotware go to:

http://www.delta.com.tw/product/em/download/download_main.asp?act=3&pid=1&cid=1&tpid=3

2. Testing PM High Frequency Standstill VFD (calculating of Rs, Ld, Lg)

   Procedures:

   A. Set control mode as VF mode (Pr00-10=0, Pr00-11=0)
   B. Output Frequency of Motor 1 (Pr01-01)
   C. Output Voltage of Motor 1 (Pr01-02)
   D. Induction Motor and Permanent Magnet Motor Selection (Pr05-33=1 or 2)
   E. Full-load current of Permanent Magnet Motor(Pr05-34
   F. Set Static test for PM(IPM) (05-00=13), then run the drive.

3. Set control mode as PM sensorless Mode (Parameters 00-10=0, 00-11=6)
4. Set VFD Prameters
   - ☑ Pr05-35 Rated Power of Permanent Magnet Motor
   - ☑ Pr05-36 Rated speed of Permanent Magnet Motor
   - ☑ Pr05-37 Pole number of Permanent Magnet Motor
   - ☑ Pr05-38 Inertia of Permanent Magnet Motor
5. Set ASR Parameters
   - ☑ Pr11-00 bit0=1: Auto tuning for ASR and APR
   - ☑ Pr11-02：ASR1/ASR2 Switch Frequency, it is recommended to set Pr10-39 higher than 10Hz.
   - ☑ Pr11-03: ASR1 Low-speed Bandwidth and Pr11-03, ASR2 High-speed Bandwidth. Do not set Low-speed Bandwith too high to avoid dissipation of the estimator.
6. Set speed estimator and speed control's parameter.
   - ☑ Pr10-39 Frequency when switch from I/F Mode to PM sensorless mode.
   - ☑ Pr10-32 PM Sensorless Obeserver Bandwith for High Speed Zone
7. Zero-load test
   - ☑ Refer to switch point prodcedure of I/F and FOC as shown in the image below.

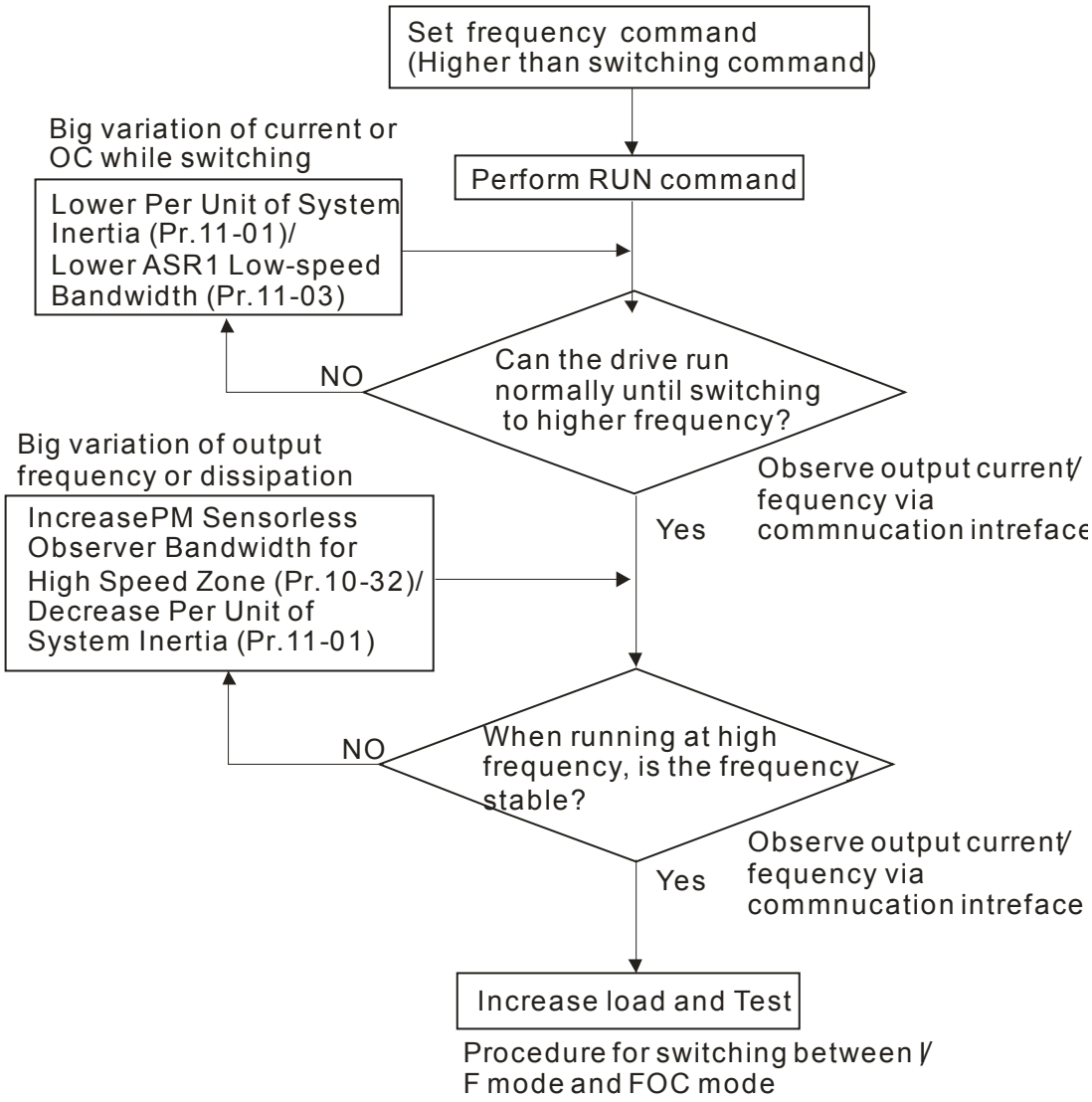

IPM control method SOP

1. Set up IPM motor

   Pr05-33=2

2. Set up motor parameter according to the motor Nameplate

   Pr01-01 Output Frequency of Motor 1（base frequency and motor rated frequency

   Pr01-02 Output Voltage of Motor 1（base frequency and motor rated frequency）

   Pr05-34 Full-load current of Permanent Magnet Motor

   Pr05-35 Rated Power of Permanent Magnet Motor

   Pr05-36 Rated speed of Permanent Magnet Motor

   Pr05-37 Pole number of Permanent Magnet Motor

3. Execute Auto-tuning

   Set upPr05-00=13 for IPM motor tuning and press Run(static-tuning). When the tuning is done, the following parameters will be obtained.

   Pr05-39 Stator Resistance of PM Motor

   Pr05-40 Permanent Magnet Motor Ld

   Pr05-41 Permanent Magnet Motor Lq

4. Set up control mode: Pr00-10=0 velocity mode, Pr00-11=7 IPM sensor-less
5. Turn OFF the power and power ON again.
6. Modify the ASR Kp and Ki according to system need.

10-43 PG Card Version

Factory Setting: Read only

Settings 0~655.35

Version reference:

PG02U	21.XX
PG01U	31.XX
PG01O/PG01L	11.XX
PG02O/PG02L	14.XX
PG01R	41.XX

10-44 ~ 10-48 Reserved

10-49 Zero voltage time while start up

Factory Setting: 00.000 sec

Settings 00.000~60.000 sec

- When the motor is in static status at the startup, the accuracy to estimate angles will be increased. In order to make the motor in “static status”, the drive 3 phase U, V, W output 0V to motor to reach this goal. The Pr10-49 setting time is the length of time when three-phase output 0V.
- It is possible that even when this parameter is being applied but the motor at the installation site cannot go in to the “static status” caused by the inertia or by any external force. So, if the motor doesn’t go into a completer “static status” in 0.2 sec, increase appropriately this setting value. This parameter is functional only when the setting of Pr07-12 Speed Search during Startup ≠0.

10-50 Reverse angle limit (Electrical angle)

Factory Setting: 10.00 degree

Settings 0.00~30.00 degree

- While forward run is starting, if there is a sudden reverse run and the reverse angle is bigger than the Pr10-50 setting, then, drive will has a ScRv error.
- This parameter is valid only when Pr07-28 =11 Enable textile machine’s function.

10-51 Injection Frequency

Factory Setting: 500 Hz

Settings 0~1200Hz

- This parameter is a High Frequency Injection Command when the motor drive is under IPM HFI sensor-less control mode and it doesn’t often need to be adjusted. But, if a motor’s rated frequency (i.e. 400Hz) is too close to the frequency setting of this parameter (i.e. 500Hz), the accuracy of angles detected will be affected. Therefore, refer to the setting of Pr01-01 before adjusting this parameter.

10-52 Injection Magnitude

Factory Setting:15/30V

Settings 0.0~200.0V

- This parameter is the High Frequency Injection Command's amplitude when the motor drive is under IPM HFI sensor-less control mode.
- By increase the setting value of this parameter, the accuracy of angles detected will also be increased. However, if the setting value is too big, it will cause a louder electromagnetic noise.

11 Advanced Parameters

This parameter can be set during operation.

In this parameter group, ASR is the abbreviation for Adjust Speed Regulator

11-00 System Control

Factory Setting: 0

Settings	0: Auto tuning for ASR and APR
	1: Inertia estimate (only in FOCPG mode)
	2: Zero servo
	3: Dead time compensation closed
	7: Selection to save or not save the freqeuncy
	8: Maximum speed of point to point position control

Bit 0=0: Pr.11-06 to 11-11 will be valid and Pr.11-03~11-05 are invalid.

Bit 0=1: system will generate an ASR setting. At this moment, Pr.11-06~11-11 will be invalid and Pr.11-03~11-05 are valid.

Bit 1=0: no function.

Bit 1=1: Inertia estimate function is enabled. (Bit 1 setting would not activate the estimation process, please set Pr.05-00=12 to begin FOC/TQC Sensorless inertia estimating)

Bit 2=0: no function.

Bit 2=1: when frequency command is less than Fmin (Pr.01-07), it will use zero servo function.

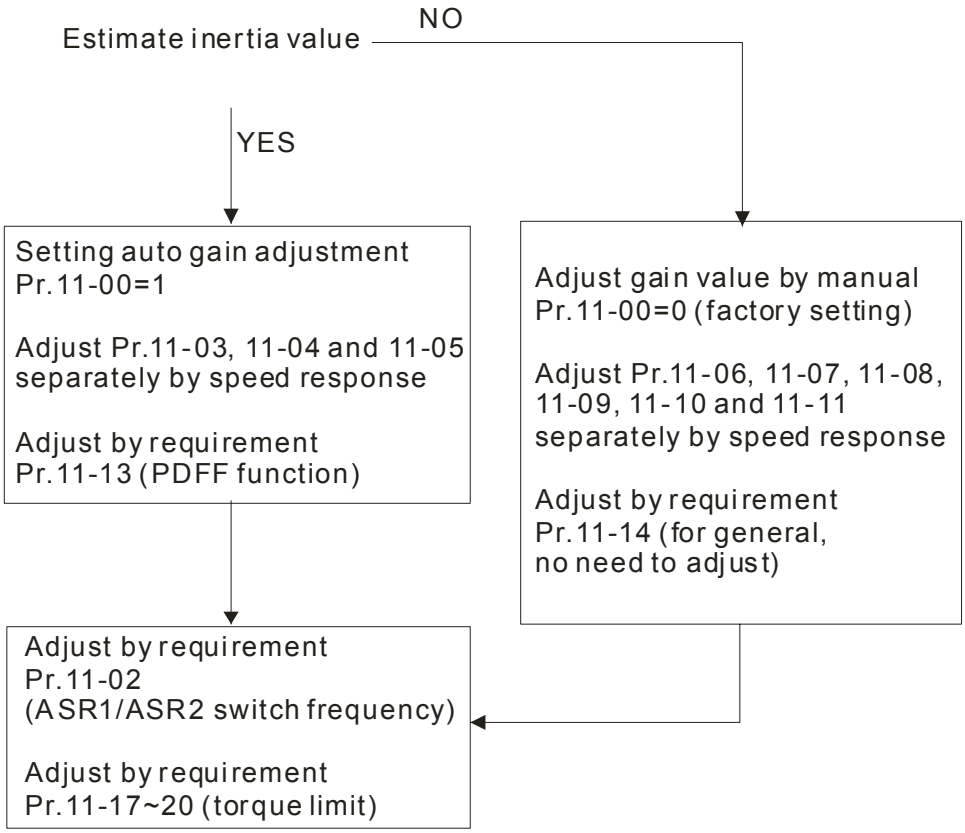

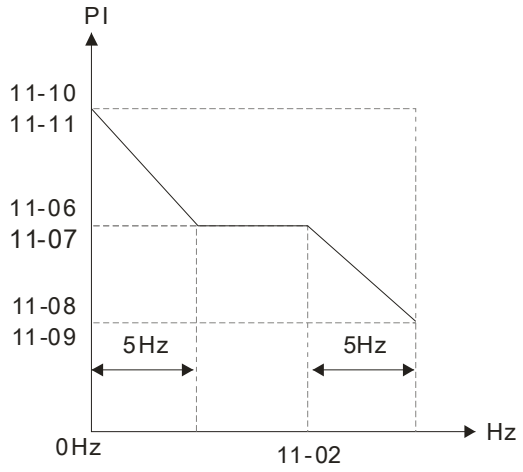

PI adjustment-manual gain

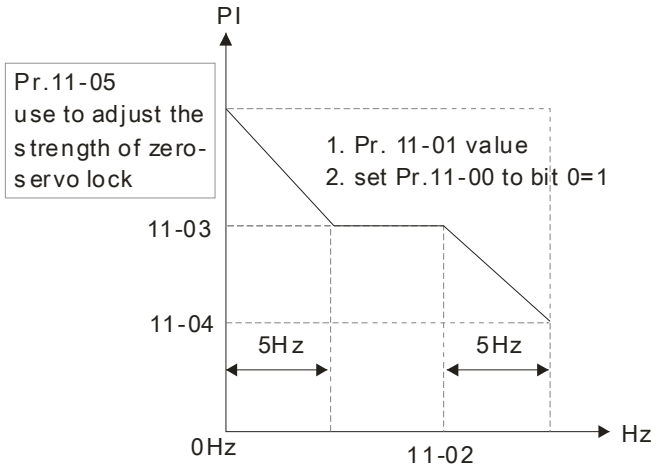

PI adjustment-auto gain

Bit 7=0: frequency is saved before power turns off. When power turns on again, the display frequency will be the memorized frequency.

Bit 7=1: frequency is not saved before power turns off. When power turns ON again, the display frequency will be 0.00Hz.

Bit 8=0: maximum speed for point-to-point position control is control by the setting of Pr.11-43.

Bit 8=1: maximum speed for point-to-point position control is control by the multi-step speed setting of the external terminal device. When multi-step speed of the external device is set to 0, the maximum operation speed will bet the setting of Pr.11-43.

11-01 Per Unit of System Inertia

Factory Setting: 256

Settings 1~65535（256=1PU）

To get the system inertia from Pr.11-01, user needs to set Pr.11-00 to bit1=1 and execute continuous forward/reverse running.

Unit of induction motor system inertia is 0.001kg-m^2:

Power	Setting	Power	Setting	Power	Setting
1HP	2.3	20HP	95.3	100HP	1056.5
2HP	4.3	25HP	142.8	125HP	1275.3
3HP	8.3	30HP	176.5	150HP	1900.0
5HP	14.8	40HP	202.5	175HP	2150.0
7.5HP	26.0	50HP	355.5	215HP	2800.0
10HP	35.8	60HP	410.8	300HP	3550.0
15HP	74.3	75HP	494.8		

The base value for induction motor system inertia is set by Pr.05-38 and the unit is in 0.001kg-m^2.

11-02 ASR1/ASR2 Switch Frequency

Factory Setting: 7.00

Settings 5.00~599.00Hz

11-03 ASR1 Low-speed Bandwidth

Factory Setting: 10

Settings 1~40Hz (IM)/ 1~100Hz (PM)

11-04 ASR2 High-speed Bandwidth

Factory Setting: 10

Settings 1~40Hz (IM)/ 1~100Hz (PM)

11-05 Zero-speed Bandwidth

Factory Setting: 10

Settings 1~40Hz (IM)/ 1~100Hz (PM)

After estimating inertia and set Pr.11-00 to bit 0=1 (auto tuning), user can adjust parameters Pr.11-03, 11-04 and 11-05 separately by speed response. The larger number you set, the faster response you will get. Pr.11-02 is the switch frequency for low-speed/high-speed bandwidth.

Position control pulse command (MIx=37) and P2P position control Kp gain can adjust Pr11-05. The higher the value, the lower the steady-state error.

11-06 ASR (Auto Speed Regulation) control (P) 1

Factory Setting: 10

Settings 0~40 Hz (IM)/ 1~100Hz (PM)

11-07 ASR (Auto Speed Regulation) control (I) 1

Factory Setting: 0.100

Settings 0.000~10.000 sec

11-08 ASR (Auto Speed Regulation) control (PI) 2

Factory Setting: 10

Settings 0~40 Hz (IM)/ 0~100Hz (PM)

11-09 ASR (Auto Speed Regulation) control (I) 2

Factory Setting: 0.100

Settings 0.000~10.000 sec

11-10 ASR(Auto Speed Regulation) Control (P) of Zero Speed

Factory Setting: 10

Settings 0~40 Hz (IM)/ 0~100Hz (PM)

11-11 ASR(Auto Speed Regulation) Control (I) of Zero Speed

Factory Setting: 0.100

Settings 0.000~10.000 sec

11-12 Gain for ASR Speed Feed Forward

Factory Setting: 0

Settings 0~150%

This parameter is used to improve speed response.

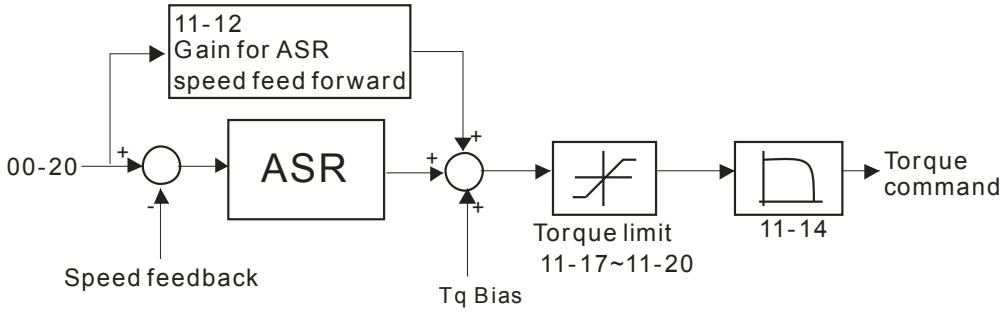

11-13 PDFF Gain Value

Factory Setting: 30

Settings 0~200%

- After finishing estimating and set Pr.11-00 to bit 0=1 (auto tuning), using Pr.11-13 to reduce overshoot. Please adjust PDFF gain value by actual situation.
- This parameter will be invalid when Pr.05-24 is set to 1.

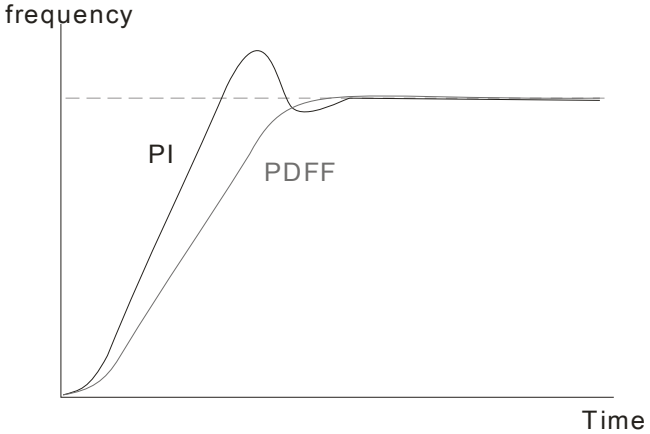

11-14 Low-pass Filter Time of ASR Output

Factory Setting: 0.008

Settings 0.000~0.350 sec

- It is used to set the filter time of ASR command.

11-15 Notch Filter Depth

Factory Setting: 0

Settings 0~20db

11-16 Notch Filter Frequency

Factory Setting: 0.00

Settings 0.00~200.00Hz

- This parameter is used to set resonance frequency of mechanical system. It can be used to suppress the resonance of mechanical system.
- The larger number you set Pr.11-15, the better suppression resonance function you will get.
- The notch filter frequency is the resonance of mechanical frequency.

11-17 Forward Motor Torque Limit
11-18 Forward Regenerative Torque Limit
11-19 Reverse Motor Torque Limit
11-20 Reverse Regenerative Torque Limit

Factory Setting: 500

Settings 0~500%

- The motor drive rated current is 100%. The settings for Pr.11-17 to Pr.11-20 will compare with Pr.03-00=7, 8, 9, 10. The minimum of the comparison result will be torque limit. Please refer the chart as below.

Calculation equation for motor rated torque:

Motor rated torque= $T(N.M)=\dfrac{P(W)}{\omega(rad/s)}$; P(W) value= Pr.05-02;

ω(rad/s) value= Pr.05-03 。 $\dfrac{RPM\times 2\pi}{60}=rad/s$

. FOCPG and FOC sensor-less control mode

The drive rated current=100%. The setting value of parameters Pr11-17~Pr11-20 will compare to Pr03-00=7, 8, 9 and 10. The smallest value will become the torque limit value. Please refer to the torque limit diagram.

TQCPG and TQC Sensor-less control mode

The drive rated current=100%. The setting value of parameters Pr11-17~Pr11-20 will compare to Pr06-12. The smallest value will become the torque limit value.

VF, VFPG and SVC control mode

The Pr11-17~Pr11-20 are output current limit and its 100%=drive rated current. The smallest value between the Pr11-17~Pr11-20 and Pr06-12 will become output current limit. If the output current has reach this limit during acceleration or normal running, drive will enable “Over current Stall” function. Until the output frequence drops to limit value, drive can run normally.

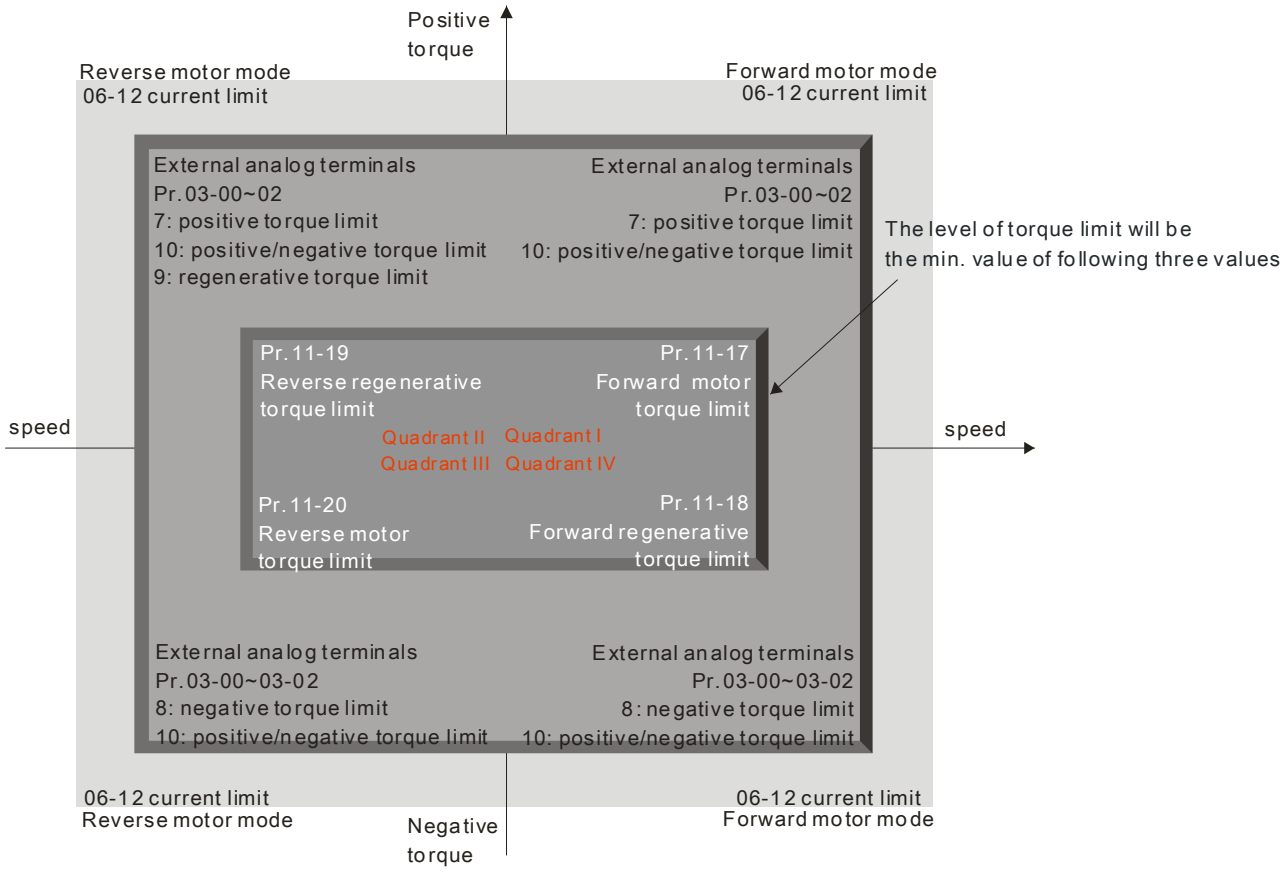

11-21 Gain Value of Flux Weakening Curve for Motor 1

Factory Setting: 90

Settings 0~200%

11-22 Gain Value of Flux Weakening Curve for Motor 2

Factory Setting: 90

Settings 0~200%

Pr.11-21 and 11-22 are used to adjust the output voltage of flux weakening curve.

For the spindle application, the adjustment method is

1. It is used to adjust the output voltage when exceeding rated frequency.
2. Monitor the output voltage
3. Adjust Pr.11-21 (motor 1) or Pr.11-22 (motor 2) setting to make the output voltage reach motor rated voltage.
4. The larger number it is set, the larger output voltage you will get.

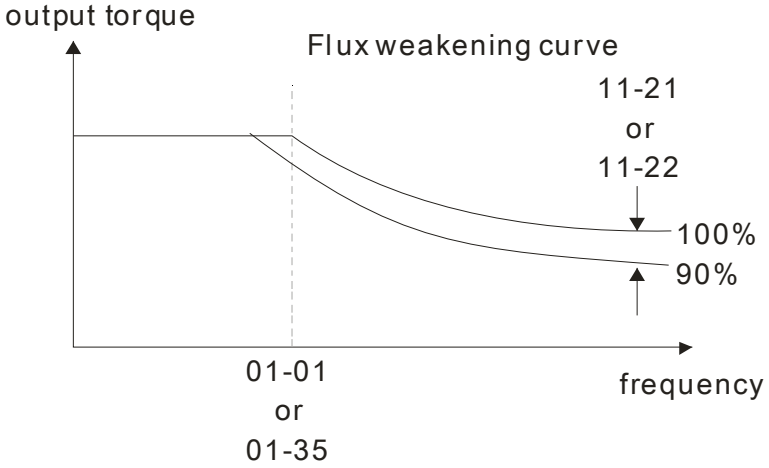

11-23 Speed Response of Flux Weakening Area

Factory Setting: 65

Settings 0: Disable
0~150%

It is used to control the speed in the flux weakening area. The larger value is set in Pr.11-23, the faster acceleration/deceleration will generate. In general, it is not necessary to adjust this parameter.

11-24 APR Gain

Factory Setting: 10.00

Settings 0.00~40.00 (IM)/ 0~100.00Hz (PM)

Kip gain of internal position (MI=35)

11-25 Gain Value of APR Feed Forward

Factory Setting: 30

Settings 0~100

It works only for internal position (MI=35) and position control pulse command (MI=37). To set a larger value in Pr.11-25, it can shorten the pulse differential and speed up the position response. But it may cause overshoot.

11-26 APR Curve Time

Factory Setting: 3.00

Settings 0.00~655.35 sec

It is valid when the multi-function input terminal is set to 35(ON). The larger it is set, the longer the position time will be.

11-27 Max. Torque Command

Factory Setting: 100

Settings 0~500%

- The upper limit of torque command is 100%.
- Calculation equation for motor rated torque:

motor rated torque: $T(N.M) = \dfrac{P(W)}{\omega(rad/s)}$; P(W) value= Pr.05-02;

ω(rad/s) value= Pr.05-03 。$\dfrac{RPM \times 2\pi}{60} = rad/s$

11-28 Source of Torque Offset

Factory Setting: 0

Settings 0: Disable
1: Analog input (Pr.03-00~Pr.03-02)
2: Torque offset setting (Pr.11-29)
3: Control by external terminal (by Pr.11-30 to Pr.11-32)

- This parameter is the source of torque offset.
- When it is set to 3, source of torque offset would determine to follow Pr.11-30, Pr.11-31 or Pr.11-32 as command by the combination of MI setting as 31, 32 or 33. Please refer following char:

N.O. switch status: ON= contact closed, OFF= contact open

Pr. 11-32	Pr. 11-31	Pr. 11-30	
MI=33(Low)	MI=32(Mid)	MI=31(High)	Torque Offset
OFF	OFF	OFF	None
OFF	OFF	ON	11-30
OFF	ON	OFF	11-31
OFF	ON	ON	11-30+11-31
ON	OFF	OFF	11-32
ON	OFF	ON	11-30+11-32
ON	ON	OFF	11-31+11-32
ON	ON	ON	11-30+11-31+11-32

11-29 Torque Offset Setting

Factory Setting: 0.0

Settings -100.0%~100.0%

- This parameter is torque offset. The motor rated torque is 100%.
- Calculation equation for motor rated torque:

motor rated torque: $T(N.M) = \dfrac{P(W)}{\omega(rad/s)}$; P(W) value= Pr.05-02;

ω(rad/s) value= Pr.05-03 。$\dfrac{RPM \times 2\pi}{60} = rad/s$

11-30 High Torque Offset

Factory Setting: 30.0

Settings -100.0%~100.0%

11-31 Middle Torque Offset

Factory Setting: 20.0

Settings -100.0%~100.0%

11-32 Low Torque Offset

Factory Setting: 10.0

Settings -100.0%~100.0%

- When Pr.11-28 is set to 3, the source of torque offset will regard Pr.11-30, Pr.11-31 and Pr.11-32 by the multi-function input terminals setting (31, 32 or 33). The motor rated torque is 100%.
- Calculation equation for motor rated torque:

  motor rated torque: $T(N.M) = \dfrac{P(W)}{\omega(rad/s)}$; P(W) value= Pr.05-02;

  ω(rad/s) value= Pr.05-03 。$\dfrac{RPM \times 2\pi}{60} = rad/s$

11-33 Source of Torque Command

Factory Setting: 0

Settings 0: Digital Keypad (Pr.11-34)
1: RS485 serial communication
2: Analog signal (Pr.03-00)
3: CANopen
4: Reserved
5: Communication card

- When Pr.11-33 is set to 0 or 1, torque command can be set in Pr.11-34.
- When Pr.11-33 is set to 2, 3, and 5, Pr.11-34 would only display the torque command

11-34 Torque Command

Factory Setting: 0.0

Settings -100.0~100.0%(Pr.11-27=100%)

- This parameter is for the torque command. When Pr.11-27 is set to 250% and Pr.11-34 is set to 100%, actual torque command=250X100%=250% motor rated torque.
- The drive will save the setting to the record before power turns off.

11-35 Low-pass Filter Time of Torque Command

Factory Setting: 0.000

Settings 0.000~1.000 sec

- When the setting is too long, the control will be stable but the control response will be delay. When the setting is too short, the response will be quickly but the control maybe unstable. User can adjust the setting by the control and response situation.

11-36 Speed Limit Selection

Factory Setting: 0

Settings 0: Set by Pr.11-37 (Forward speed limit) and Pr.11-38 (Reverse speed limit)

1: Set by Pr.11-37,11-38 and Pr.00-20 (Source of Master Frequency Command)

2: Set by Pr.00-20 (Source of Master Frequency Command).

- Speed limit function: in TQCPG, when the motor speed is accelerated to speed limit value (Pr.11-36, 11-37 and 11-38), it will switch to speed control mode to stop acceleration.
- Pr11-36=1:
  When the torque command is positive, the forward speed limit is Pr00-20 and reverse speed limit is Pr11-38.
  When the torque command is negative, the forward speed limit is Pr11-37 and reverse speed limit is Pr00-20.
- Unwind application, Torque command direction is different to motor operating direction, this indicates that the motor is being load dragging. At this moment, the speed limit must be Pr11-37 or Pr11-38. When the torque command direction and speed limit have same direction, the speed limit will refer to the setting of Pr00-20
- About the keypad display, please refer to the “LED function Descriptions ” in User manual chapter10 “Digital Keypad’. In torque control, F page of keypad display the present speed limit value.

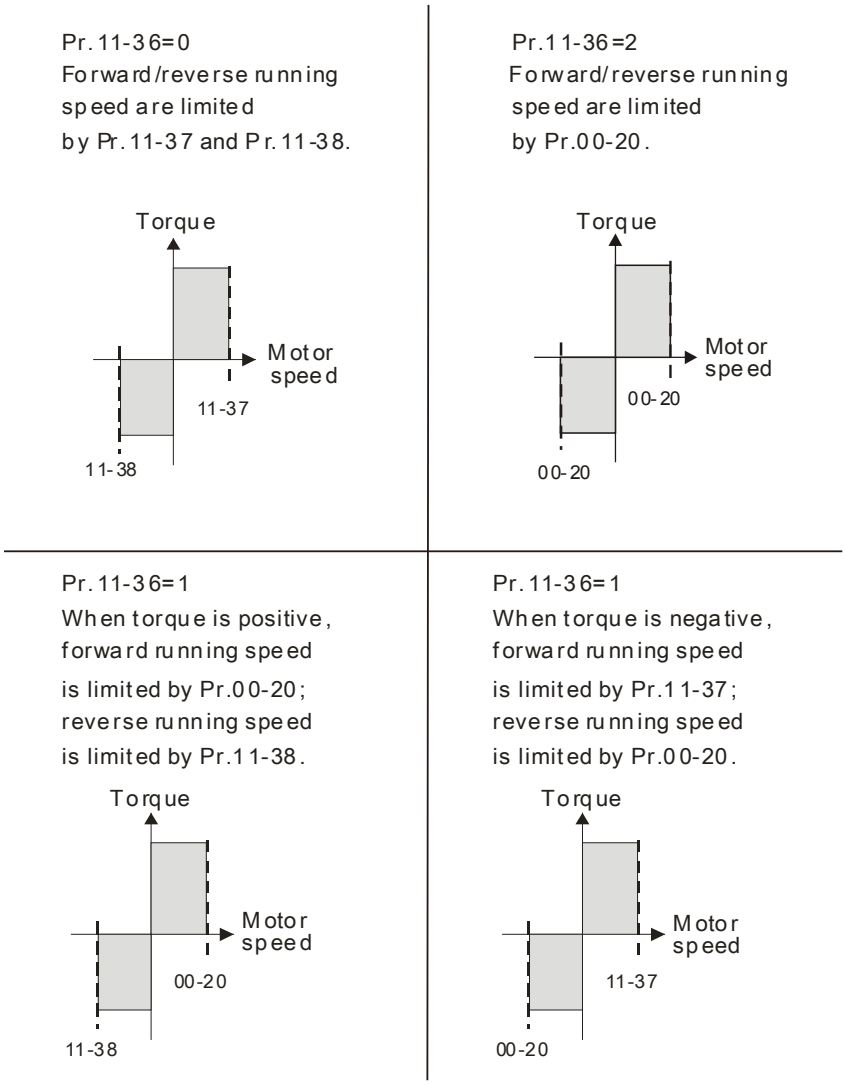

11-37 Forward Speed Limit (torque mode)

Factory Setting: 10

Settings 0~120%

11-38 Reverse Speed Limit (torque mode)

Factory Setting: 10

Settings 0~120%

These parameters are used in the torque mode to limit the running direction and opposite direction. (Pr.01-00 max. output frequency=100%)

11-39 Zero Torque Command Mode

Factory Setting: 0

Settings 0: Torque mode
1: Speed mode

This parameter only works in TQCPG IM and TQCPG PM, and it defines the mode when speed limit is 0% or 0Hz.

When Pr.11-39 is set as 0 (the torque mode), and speed limit is 0% or 0Hz, the motor will generate excitation current but no torque current.

When Pr.11-39 is set as 1 (the speed mode), if torque command is 0% and speed limit is 0Hz, the AC motor drive can still produce torque current through speed controller (at this moment, the torque limit is Pr06-12) and the control mode will change from TQCPG to FOCPG mode. The motor will have a holding torque. If the speed command is not 0, motor drive will change to be 0.

11-40 Command Source of Point-to-Point Position Control

Factory Settings:0

Settings 0: External terminal
1: Reserved
2: RS485
3: CAN
4: Reserved
5: Communication card

11-41 Reserved

11-42 System control flag

Factory Settings: 0000

Settings 0000~FFFFh

Bit No.	Function	Description
0	Current limit selection of speed control at torque mode	0:Speed control at torque mode, the highest current limit is torque command. 1: Speed control at torque mode, the highest current limit is Pr06-12
1	FWD/REV action control	0: FWD/REV cannot be controlled by 02-12 bit 0 & 1 1: FWD/REV can be controlled by 02-12 bit 0&1
2~15	Reserved	

11-43 Max. Frequency of Point- to-Point Position Control

Factory Settings:10.00

Settings 0.00~599.00Hz

11-44 Accel. Time of Point-to Point Position Control

Factory Settings:1.00

Settings 0.00~655.35sec

11-45 Decel. Time of Point-to Point Position Control

Factory Settings:3.00

Settings 0.00~655.35sec

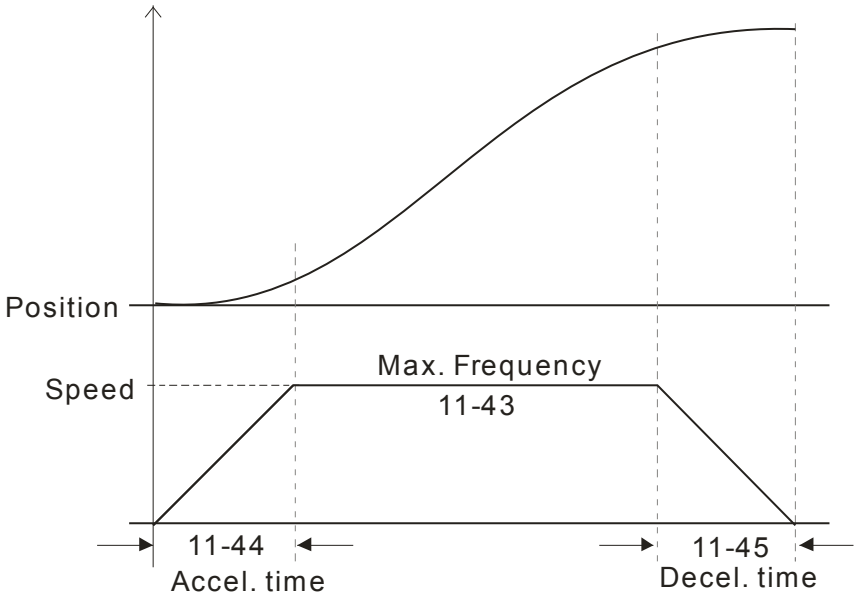

Chapter 13 Warning Codes

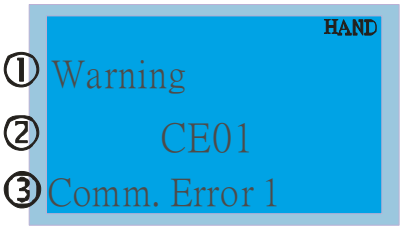

① Display error signal

② Abbreviate error code
The code is displayed as shown on KPC-CE01.

③ Display error description

ID No.	Display on LCM Keypad	Descriptions
1	HAND Warning CE01 Comm. Error 1	Modbus function code error
2	HAND Warning CE02 Comm. Error 2	Address of Modbus data is error
3	HAND Warning CE03 Comm. Error 3	Modbus data error
4	HAND Warning CE04 Comm. Error 4	Modbus communication error
5	HAND Warning CE10 Comm. Error 10	Modbus transmission time-out
7	HAND Warning SE1 Save Error 1	Keypad COPY error 1 Keypad simulation error, including communication delays, communication error (keypad recived error FF86) and parameter value error.
8	HAND Warning SE2 Save Error 2	Keypad COPY error 2 Keypad simulation done, parameter write error
9	HAND Warning oH1 Over heat 1 warn	IGBT over-heating warning
10	HAND Warning oH2 Over heat 2 warn	Capacity over-heating warning

ID No.	Display on LCM Keypad	Descriptions
11	HAND Warning PID PID FBK Error	PID feedback error
12	HAND Warning ANL Analog loss	ACI signal error When Pr03-19 is set to 1 and 2.
13	HAND Warning uC Under Current	Low current
15	HAND Warning PGFB PG FBK Warn	PG feedback error
17	HAND Warning oSPD Over Speed Warn	Over-speed warning
18	HAND Warning DAvE Deviation Warn	Over speed deviation warning
19	HAND Warning PHL Phase Loss	Phase loss
20	HAND Warning ot1 Over Torque 1	Over torque 1
21	HAND Warning ot2 Over Torque 2	Over torque 2
22	HAND Warning oH3 Motor Over Heat	Motor over-heating
24	HAND Warning oSL Over Slip Warn	Over slip
25	HAND Warning tUn Auto tuning	Auto tuning processing

ID No.	Display on LCM Keypad	Descriptions
28	HAND Warning OPHL Output PHL Warn	Output phase loss
30	HAND Warning SE3 Copy Model Err 3	Keypad COPY error 3 Keypad copy between different power range drive
36	HAND Warning CGdn Guarding T-out	CAN guarding time-out 1
37	HAND Warning CHbn Heartbeat T-out	CAN heartbeat time-out 2
39	HAND Warning CbFn Can Bus Off	CAN bus off
40	HAND Warning CIdn CAN/S Idx exceed	CAN index error
41	HAND Warning CAdn CAN/S Addres set	CAN station address error
42	HAND Warning CFrn CAN/S FRAM fail	CAN memory error
43	HAND Warning CSdn SDO T-out	CAN SDO transmission time-out
44	HAND Warning CSbn Buf Overflow	CAN SDO received register overflow
46	HAND Warning CPtn Error Protocol	CAN format error
47	HAND Warning PIra RTC Adjust	Adjust RTC

ID No.	Display on LCM Keypad	Descriptions
50	HAND Warning PLod Opposite Defect	PLC download error
51	HAND Warning PLSv Save mem defect	Save error of PLC download
52	HAND Warning PLdA Data defect	Data error during PLC operation
53	HAND Warning PLFn Function defect	Function code of PLC download error
54	HAND Warning PLor Buf overflow	PLC register overflow
55	HAND Warning PLFF Function defect	Function code of PLC operation error
56	HAND Warning PLSn Check sum error	PLC checksum error
57	HAND Warning PLEd No end command	PLC end command is missing
58	HAND Warning PLCr PLC MCR error	PLC MCR command error
59	HAND Warning PLdF Download fail	PLC download fail
60	HAND Warning PLSF Scane time fail	PLC scan time exceed
61	HAND Warning PCGd CAN/M Guard err	CAN Master guarding error

ID No.	Display on LCM Keypad	Descriptions
62	HAND Warning PCbF CAN/M bus off	CAN Master bus off
63	HAND Warning PCnL CAN/M Node Lack	CAN Master node error
64	HAND Warning PCCt CAN/M Cycle Time	CAN/M cycle time-out
65	HAND Warning PCSF CAN/M SDO over	CAN/M SDOover
66	HAND Warning PCSd CAN/M Sdo Tout	CAN/M SDO time-out
67	HAND Warning PCAd CAN/M Addres set	CAN/M station address error
68	HAND Warning PCTo CAN/M T-Out	PLC/CAN Master Slave communication time out
70	HAND Warning ECid ExCom ID failed	Duplicate MAC ID error Node address setting error
71	HAND Warning ECLv ExCom pwr loss	Low voltage of communication card
72	HAND Warning ECtt ExCom Test Mode	Communication card in test mode
73	HAND Warning ECbF ExCom Bus off	DeviceNet bus-off
74	HAND Warning ECnP ExCom No power	DeviceNet no power

ID No.	Display on LCM Keypad	Descriptions
75	HAND Warning ECFF ExCom Facty def	Factory default setting error
76	HAND Warning ECiF ExCom Inner err	Serious internal error
77	HAND Warning ECio ExCom IONet brk	IO connection break off
78	HAND Warning ECPP ExCom Pr data	Profibus parameter data error
79	HAND Warning ECPi ExCom Conf data	Profibus configuration data error
80	HAND Warning ECEF ExCom Link fail	Ethernet Link fail
81	HAND Warning ECto ExCom Inr T-out	Communication time-out for communication card and drive
82	HAND Warning ECCS ExCom Inr CRC	Check sum error for Communication card and drive
83	HAND Warning ECrF ExCom Rtn def	Communication card returns to default setting
84	HAND Warning ECo0 ExCom MTCP over	Modbus TCP exceed maximum communication value
85	HAND Warning ECo1 ExCom EIP over	EtherNet/IP exceed maximum communication value
86	HAND Warning ECiP ExCom IP fail	IP fail

ID No.	Display on LCM Keypad	Descriptions
87	HAND Warning EC3F ExCom Mail fail	Mail fail
88	HAND Warning Ecby ExCom Busy	Communication card busy
90	HAND Warning CPLP Copy PLC Pass Wd	Copy PLC password error
91	HAND Warning CPL0 Copy PLC Mode Rd	Copy PLC Read mode error
92	HAND Warning CPL1 Copy PLC Mode Wt	Copy PLC Write mode error
93	HAND Warning CPLv Copy PLC Version	Copy PLC Version error
94	HAND Warning CPLS Copy PLC Size	Copy PLC Capacity size error
96	HAND Warning CPLt Copy PLC Time Out	Copy PLC time out
101	HAND Warning ictn InrCOM Time Out	Internal communication is off

[The page intentionally left blank]

Chapter 14 Fault Codes and Descriptions

① Display error signal

② Abbreviate error code
The code is displayed as shown on KPC-CE01.

③ Display error description

* Refer to setting of Pr06-17~Pr06~22.

ID*	Fault Name	Fault Descriptions	Corrective Actions
1	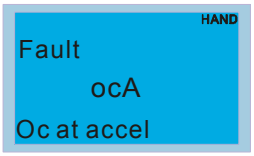	Over-current during acceleration (Output current exceeds triple rated current during acceleration.)	1. Short-circuit at motor output: Check for possible poor insulation at the output. 2. Acceleration Time too short: Increase the Acceleration Time. 3. AC motor drive output power is too small: Replace the AC motor drive with the next higher power model.
2	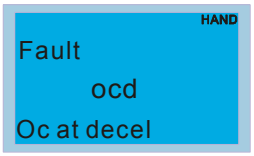	Over-current during deceleration (Output current exceeds triple rated current during deceleration.)	1. Short-circuit at motor output: Check for possible poor insulation at the output. 2. Deceleration Time too short: Increase the Deceleration Time. 3. AC motor drive output power is too small: Replace the AC motor drive with the next higher power model.
3	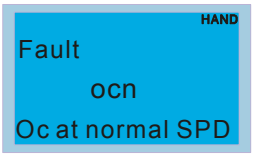	Over-current during steady state operation (Output current exceeds triple rated current during constant speed.)	1. Short-circuit at motor output: Check for possible poor insulation at the output. 2. Sudden increase in motor loading: Check for possible motor stall. 3. AC motor drive output power is too small: Replace the AC motor drive with the next higher power model.
4		Ground fault	When (one of) the output terminal(s) is grounded, short circuit current is more than 50% of AC motor drive rated current, the AC motor drive power module may be damaged. NOTE: The short circuit protection is provided for AC motor drive protection, not for protecting the user. 1. Check the wiring connections between the AC motor drive and motor for possible short circuits, also to ground. 2. Check whether the IGBT power module is damaged. 3. Check for possible poor insulation at the output.
5	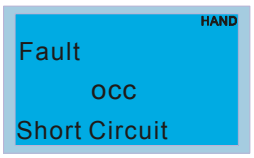	Short-circuit is detected between upper bridge and lower bridge of the IGBT module	Return to the factory

ID*	Fault Name	Fault Descriptions	Corrective Actions
6	HAND Fault ocS Oc at stop	Hardware failure in current detection	Return to the factory
7	HAND Fault ovA Ov at accel	DC BUS over-voltage during acceleration (230V: DC 450V; 460V: DC 900V)	1. Check if the input voltage falls within the rated AC motor drive input voltage range. 2. Check for possible voltage transients. 3. If DC BUS over-voltage due to regenerative voltage, please increase the acceleration time or add an optional brake resistor.
8	HAND Fault ovd Ov at decel	DC BUS over-voltage during deceleration (230V: DC 450V; 460V: DC 900V)	1. Check if the input voltage falls within the rated AC motor drive input voltage range. 2. Check for possible voltage transients. 3. If DC BUS over-voltage due to regenerative voltage, please increase the Deceleration Time or add an optional brake resistor.
9	HAND Fault ovn Ov at normal SPD	DC BUS over-voltage at constant speed (230V: DC 450V; 460V: DC 900V)	1. Check if the input voltage falls within the rated AC motor drive input voltage range. 2. Check for possible voltage transients. 3. If DC BUS over-voltage due to regenerative voltage, please increase the Deceleration Time or add an optional brake resistor.
10	HAND Fault ovS Ov at stop	Hardware failure in voltage detection	1. Check if the input voltage falls within the rated AC motor drive input voltage range. 2. Check for possible voltage transients.
11	HAND Fault LvA Lv at accel	DC BUS voltage is less than Pr.06-00 during acceleration	1. Check if the input voltage is normal 2. Check for possible sudden load
12	HAND Fault Lvd Lv at decel	DC BUS voltage is less than Pr.06-00 during deceleration	1. Check if the input voltage is normal 2. Check for possible sudden load
13	HAND Fault Lvn Lv at normal SPD	DC BUS voltage is less than Pr.06-00 in constant speed	1. Check if the input voltage is normal 2. Check for possible sudden load
14	HAND Fault LvS Lv at stop	DC BUS voltage is less than Pr.06-00 at stop	1. Check if the input voltage is normal 2. Check for possible sudden load

ID*	Fault Name	Fault Descriptions	Corrective Actions
15	HAND Fault OrP Phase lacked	Phase Loss	Check Power Source Input if all 3 input phases are connected without loose contacts. For models 40hp and above, please check if the fuse for the AC input circuit is blown.
16	HAND Fault oH1 IGBT over heat	IGBT overheating IGBT temperature exceeds protection level	1. Ensure that the ambient temperature falls within the specified temperature range. 2. Make sure that the ventilation holes are not obstructed. 3. Remove any foreign objects from the heatsinks and check for possible dirty heat sink fins. 4. Check the fan and clean it. 5. Provide enough spacing for adequate ventilation.
17	HAND Fault oH2 Heat Sink oH	Heatsink overheating Capacitance temperature exceeds cause heatsink overheating.	1. Ensure that the ambient temperature falls within the specified temperature range. 2. Make sure heat sink is not obstructed. Check if the fan is operating 3. Check if there is enough ventilation clearance for AC motor drive.
18	HAND Fault tH1o Thermo 1 open	IGBT Hardware Error	Return to the factory
19	HAND Fault tH2o Thermo 2 open	Capacitor Hardware Error	Return to the factory
21	HAND Fault oL Over load	Overload The AC motor drive detects excessive drive output current.	1. Check if the motor is overloaded. 2. Take the next higher power AC motor drive model.
22	HAND Fault EoL1 Thermal relay 1	Electronics thermal relay 1 protection	1. Check the setting of electronics thermal relay (Pr.06-14) Take the next higher power AC motor drive model
23	HAND Fault EoL2 Thermal relay 2	Electronics thermal relay 2 protection	1. Check the setting of electronics thermal relay (Pr.06-28) 2. Take the next higher power AC motor drive model

ID*	Fault Name	Fault Descriptions	Corrective Actions
24	HAND Fault oH3 Motor over heat	Motor overheating The AC motor drive detecting internal temperature exceeds the setting of Pr.06-30 (PTC level) or Pr.06-57 (PT100 level 2).	1. Make sure that the motor is not obstructed. 2. Ensure that the ambient temperature falls within the specified temperature range. 3. Change to a higher power motor.
26	HAND Fault ot1 Over torque 1	These two fault codes will be displayed when output current exceeds the over-torque detection level (Pr.06-07 or Pr.06-10) and exceeds over-torque detection (Pr.06-08 or Pr.06-11) and it is set to 2 or 4 in Pr.06-06 or Pr.06-09.	1. Check whether the motor is overloaded. 2. Check whether motor rated current setting (Pr.05-01) is suitable 3. Take the next higher power AC motor drive model.
27	HAND Fault ot2 Over torque 2		
28	HAND Fault uC Under torque	Low current detection	Check Pr.06-71, Pr.06-72, Pr.06-73.
29	HAND Fault LMIT Limit Error	Limit error	
30	HAND Fault cF1 EEPROM write err	Internal EEPROM can not be programmed.	1. Press “RESET” key to the factory setting 2. Return to the factory.
31	HAND Fault cF2 EEPROM read err	Internal EEPROM can not be read.	1. Press “RESET” key to the factory setting 2. Return to the factory.
33	HAND Fault cd1 Ias sensor err	U-phase error	Reboots the power. If fault code is still displayed on the keypad please return to the factory
34	HAND Fault cd2 Ibs sensor err	V-phase error	Reboots the power. If fault code is still displayed on the keypad please return to the factory
35	HAND Fault cd3 Ics sensor err	W-phase error	Reboots the power. If fault code is still displayed on the keypad please return to the factory

ID*	Fault Name	Fault Descriptions	Corrective Actions
36	HAND Fault Hd0 cc HW error	CC (current clamp)	Reboots the power. If fault code is still displayed on the keypad please return to the factory
37	HAND Fault Hd1 Oc HW error	OC hardware error	Reboots the power. If fault code is still displayed on the keypad please return to the factory
38	HAND Fault Hd2 Ov HW error	OV hardware error	Reboots the power. If fault code is still displayed on the keypad please return to the factory
39	HAND Fault Hd3 occ HW error	Occ hardware error	Reboots the power. If fault code is still displayed on the keypad please return to the factory
40	HAND Fault AUE Auto tuning err	Auto tuning error	1. Check cabling between drive and motor 2. Try again.
41	HAND Fault AFE PID Fbk error	PID loss (ACI)	1. Check the wiring of the PID feedback 2. Check the PID parameters settings
42	HAND Fault PGF1 PG Fbk error	PG feedback error	Check if encoder parameter setting is accurate when it is PG feedback control.
43	HAND Fault PGF2 PG Fbk loss	PG feedback loss	Check the wiring of the PG feedback
44	HAND Fault PGF3 PG Fbk over SPD	PG feedback stall	1. Check the wiring of the PG feedback 2. Check if the setting of PI gain and deceleration is suitable 3. Return to the factory
45	HAND Fault PGF4 PG Fbk deviate	PG slip error	1. Check the wiring of the PG feedback 2. Check if the setting of PI gain and deceleration is suitable 3. Return to the factory

ID*	Fault Name	Fault Descriptions	Corrective Actions
48	HAND Fault ACE ACI loss	ACI loss	1. Check the ACI wiring 2. Check if the ACI signal is less than 4mA
49	HAND Fault EF External fault	External Fault	1. Input EF (N.O.) on external terminal is closed to GND. Output U, V, W will be turned off. 2. Give RESET command after fault has been cleared.
50	HAND Fault EF1 Emergency stop	Emergency stop	1. When the multi-function input terminals MI1 to MI6 are set to emergency stop, the AC motor drive stops output U, V, W and the motor coasts to stop. 2. Press RESET after fault has been cleared.
51	HAND Fault bb Base block	External Base Block	1. When the external input terminal (B.B) is active, the AC motor drive output will be turned off. 2. Deactivate the external input terminal (B.B) to operate the AC motor drive again.
52	HAND Fault Pcod Password error	Password is locked.	Keypad will be locked. Turn the power ON after power OFF to re-enter the correct password. See Pr.00-07 and 00-08.
54	HAND Fault CE1 PC err command	Illegal function code	Check if the function code is correct (function code must be 03, 06, 10, 63)
55	HAND Fault CE2 PC err address	Illegal data address (00H to 254H)	Check if the communication address is correct
56	HAND Fault CE3 PC err data	Illegal data value	Check if the data value exceeds max./min. value
57	HAND Fault CE4 PC slave fault	Data is written to read-only address	Check if the communication address is correct
58	HAND Fault CE10 PC time out	Modbus transmission time-out	

ID*	Fault Name	Fault Descriptions	Corrective Actions
60	HAND Fault bF Braking fault	Brake resistor fault	If the fault code is still displayed on the keypad after pressing “RESET” key, please return to the factory.
61	HAND Fault ydc Y-delta connect	Y-connection/Δ-connection switch error	1. Check the wiring of the Y-connection/Δ-connection 2. Check the parameters settings
62	HAND Fault dEb Dec. Energy back	When Pr.07-13 is not set to 0 and momentary power off or power cut, it will display dEb during accel./decel. stop.	1. Set Pr.07-13 to 0 2. Check if input power is stable
63	HAND Fault oSL Over slip error	It will be displayed when slip exceeds Pr.05-26 setting and time exceeds Pr.05-27 setting.	1. Check if motor parameter is correct (please decrease the load if overload 2. Check the settings of Pr.05-26 and Pr.05-27
64	HAND Fault ryF MC Fault	Electric valve switch error when executing Soft Start. (This warning is for frame E and higher frame of AC drives) Do not disconnect RST when drive is still operating.	
65	HAND Fault PGF5 PG HW Error	Hardware error of PG Card Check if PG Card is insert to the right slot and parameter settings for encoder are accurate.	
68	HAND Fault SdRv SpdFbk Dir Rev	Rotaing direction is different from the commanding direction deteced by the sensorless. Solution Verify if the parameter setting of the motor drive is correct Increase the estimator's bandwidth and verify if parameters relating to the sensorless are correct.	
69	HAND Fault SdOr SpdFbk over SPD	Overspeed rotation detected by the sensorless Solution Verify if the parameter setting of the motor drive is correct Increase the estimator's bandwidth and verify if parameters relating to the sensorless are correct. Verify if the gains of the speed circuit is reasonable.	
70	HAND Fault SdDe SpdFbk deviate	Big difference between the rotating speed and the command deteced by the sensorless Solution Verify if the parameter setting of the motor drive is correct Increase the estimator's bandwidth and verify if parameters relating to the sensorless are correct. Verify if the gains of the speed circuit is reasonable.	
72	HAND Fault STOL STO Loss 1	STO1~SCM1 internal hardware detect error	

ID*	Fault Name	Fault Descriptions	Corrective Actions
73	HAND Fault S1 S1-emergy stop	Emergency stop for external safety	
76	HAND Fault STO STO	Safety Torque Off function active	
77	HAND Fault STOL STO Loss 2	STO2~SCM2 internal hardware detect error	
78	HAND Fault STOL STO Loss 3	STO1~SCM1 and STO2~SCM2 internal hardware detect error	
82	HAND Fault OPHL U phase lacked	Output phase loss (Phase U)	
83	HAND Fault OPHL V phase lacked	Output phase loss (Phase V)	
84	HAND Fault OPHL W phase lacked	Output phase loss (Phase W)	
85	HAND Fault AboF PG ABZ Line off	PG card ABZ signal loss Solution Verify if the parameter setting of PG card and PG card cable is correct.	
86	HAND Fault UvoF PG UVW Line off	PG card UVW signal loss Solution Verify if the parameter setting of PG card and PG card cable is correct.	
89	HAND Fault RoPd Rotor Pos. Error	Rotor position detection error Solution Verify if the UVW output cable are loss. Verify if the motor internal coil is broken. Verify if the drive UVW output are normal.	

ID*	Fault Name	Fault Descriptions	Corrective Actions
90	HAND Fault Fstp For ce Stop	Internal PLC forced to stop Verify the setting of Pr.00-32	
101	HAND Fault CGdE Guarding T-out	CANopen guarding error	
102	HAND Fault CHbE Heartbeat T-out	CANopen heartbeat error	
104	HAND Fault CbFE Can bus off	CANopen bus off error	
105	HAND Fault CIdE Can bus Index Err	CANopen index error	
106	HAND Fault CAdE Can bus Add. Err	CANopen station address error	
107	HAND Fault CFrE Can bus off	CANopen memory error	
111	HAND Fault ictE InrCom Time Out	Internal communication time-out	
112	HAND Fault SfLK PMLess ShaftLock	Motor Shaft lock error(Motor does not turn but the output frequency is not zero) Solution Verify if the motor parameter setting is correct.	

[The page intentionally left blank]

Chapter 15 CANopen Overview

15-1 CANopen Overview
15-2 Wiring for CANopen
15-3 CANopen Communication Interface Description
15-3-1 CANopen Control Mode Selection
15-3-2 DS402 Standard Control Mode
15-3-3 By using Delta Standard (Old definition, only support speed mode)
15-3-4 By using Delta Standard (New definition)
15-3-5 DI/DO AI AO are controlled via CANopen
15-4 CANopen Supporting Index
15-5 CANopen Fault Code
15-6 CANopen LED Function

Built-in EMC-COP01 card is included in VFDXXXC23E/VFDXXXC43E models.

The built-in CANopen function is a kind of remote control. Master can control the AC motor drive by using CANopen protocol. CANopen is a CAN-based higher layer protocol. It provides standardized communication objects, including real-time data (Process Data Objects, PDO), configuration data (Service Data Objects, SDO), and special functions (Time Stamp, Sync message, and Emergency message). And it also has network management data, including Boot-up message, NMT message, and Error Control message. Refer to CiA website http://www.can-cia.org/ for details. The content of this instruction sheet may be revised without prior notice. Please consult our distributors or download the most updated version at http://www.delta.com.tw/industrialautomation

Delta CANopen supporting functions:

- Support CAN2.0A Protocol;
- Support CANopen DS301 V4.02;
- Support DSP-402 V2.0.

Delta CANopen supporting services:

- PDO (Process Data Objects): PDO1~ PDO4
- SDO (Service Data Object):
  Initiate SDO Download;
  Initiate SDO Upload;
  Abort SDO;
  SDO message can be used to configure the slave node and access the Object Dictionary in every node.
- SOP (Special Object Protocol):
  Support default COB-ID in Predefined Master/Slave Connection Set in DS301 V4.02;
  Support SYNC service;
  Support Emergency service.
- NMT (Network Management):
  Support NMT module control;
  Support NMT Error control;
  Support Boot-up.

Delta CANopen not supporting service:

- Time Stamp service

15-1 CANopen Overview

CANopen Protocol

CANopen is a CAN-based higher layer protocol, and was designed for motion-oriented machine control networks, such as handling systems. Version 4.02 of CANopen (CiA DS301) is standardized as EN50325-4. The CANopen specifications cover application layer and communication profile (CiA DS301), as well as a framework for programmable devices (CiA 302), recommendations for cables and connectors (CiA 303-1) and SI units and prefix representations (CiA 303-2).

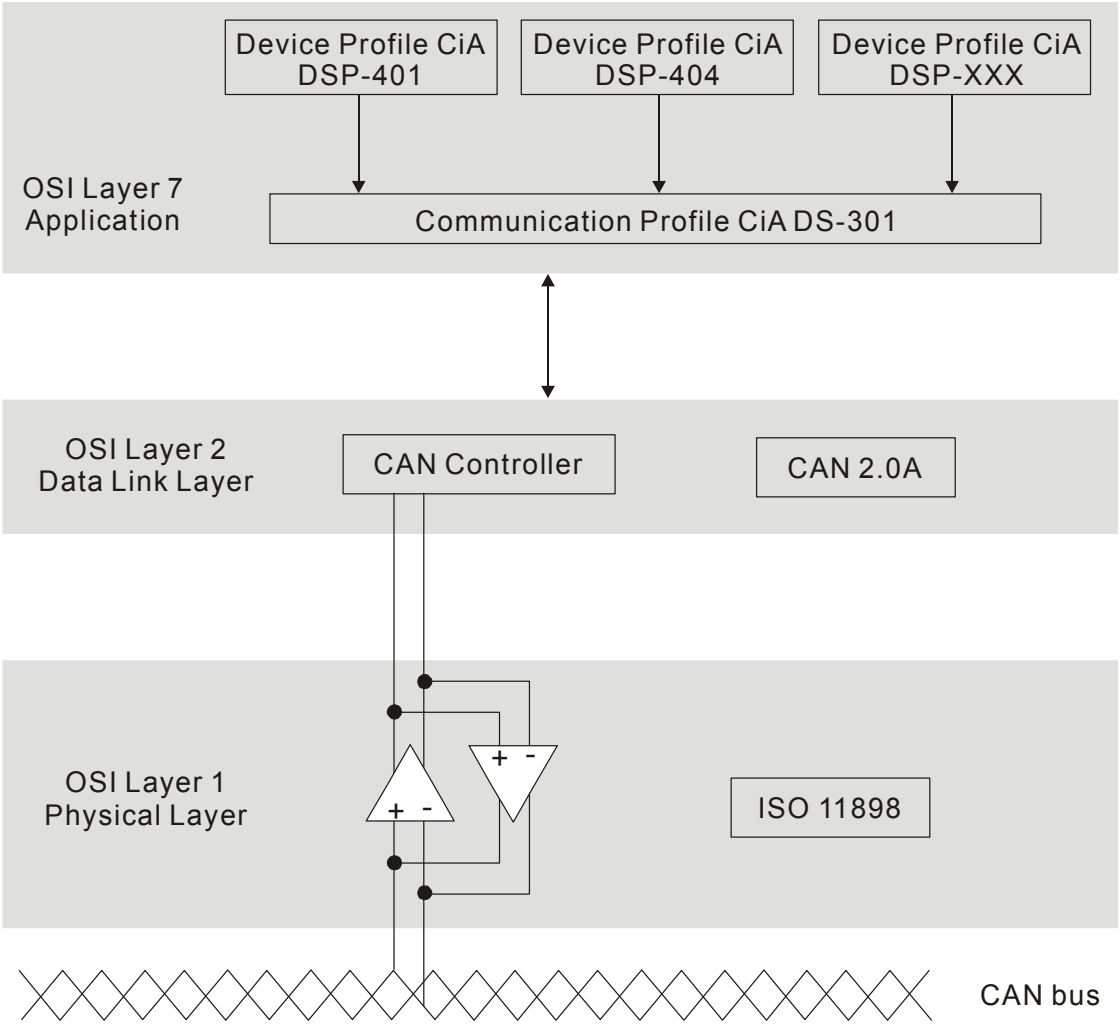

RJ-45 Pin Definition

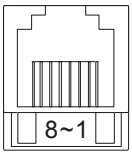

plug

PIN	Signal	Description
1	CAN_H	CAN_H bus line (dominant high)
2	CAN_L	CAN_L bus line (dominant low)
3	CAN_GND	Ground / 0V /V-
6	CAN_GND	Ground / 0V /V-

CANopen Communication Protocol

It has services as follows:

- NMT (Network Management Object)
- SDO (Service Data Objects)
- PDO (Process Data Object)
- EMCY (Emergency Object)

NMT (Network Management Object)

The Network Management (NMT) follows a Master/Slave structure for executing NMT service. Only one NMT master is in a network, and other nodes are regarded as slaves. All CANopen nodes have a present NMT state, and NMT master can control the state of the slave nodes. The state diagram of a node is shown as follows:

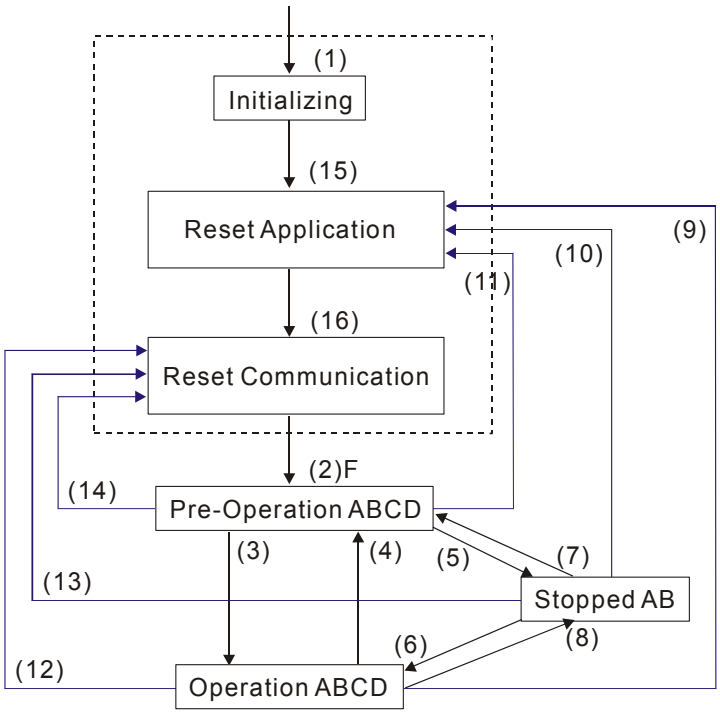

(1) After power is applied, it is auto in initialization state
(2) Enter pre-operational state automatically
(3) (6) Start remote node
(4) (7) Enter pre-operational state
(5) (8) Stop remote node
(9) (10) (11) Reset node
(12) (13) (14) Reset communication
(15) Enter reset application state automatically
(16) Enter reset communication state automatically

A: NMT
B: Node Guard
C: SDO
D: Emergency
E: PDO
F: Boot-up

	Initializing	Pre-Operational	Operational	Stopped
PDO			○	
SDO		○	○	
SYNC		○	○	
Time Stamp		○	○	
EMCY		○	○	
Boot-up	○			
NMT		○	○	○

SDO (Service Data Objects)

SDO is used to access the Object Dictionary in every CANopen node by Client/Server model. One SDO has two COB-ID (request SDO and response SDO) to upload or download data between two nodes. No data limit for SDOs to transfer data. But it needs to transfer by segment when data exceeds 4 bytes with an end signal in the last segment.

The Object Dictionary (OD) is a group of objects in CANopen node. Every node has an OD in the system, and OD contains all parameters describing the device and its network behavior. The access path of OD is the index and sub-index, each object has a unique index in OD, and has sub-index if necessary. The request and response frame structure of SDO communication is shown as follows:

PDO (Process Data Object)

PDO communication can be described by the producer/consumer model. Each node of the network will listen to the messages of the transmission node and distinguish if the message has to be processed or not after receiving the message. PDO can be transmitted from one device to one another device or to many other devices. Every PDO has two PDO services: a TxPDO and a RxPDO. PDOs are transmitted in a non-confirmed mode.

PDO Transmission type is defined in the PDO communication parameter index (1400h for the 1st RxPDO or 1800h for the 1st TxPDO), and all transmission types are listed in the following table:

Type Number	PDO				
	Cyclic	Acyclic	Synchronous	Asynchronous	RTR only
0		○	○		
1-240	○		○		
241-251	Reserved				
252			○		○
253				○	○
254				○	
255				○	

Type number 1-240 indicates the number of SYNC message between two PDO transmissions.
Type number 252 indicates the data is updated (but not sent) immediately after receiving SYNC.
Type number 253 indicates the data is updated immediately after receiving RTR.
Type number 254: Delta CANopen doesn't support this transmission format.
Type number 255 indicates the data is asynchronous transmission.
All PDO transmission data must be mapped to index via Object Dictionary.

EMCY (Emergency Object)

When errors occurred inside the hardware, an emergency object will be triggered an emergency object will only be sent when an error is occurred. As long as there is nothing wrong with the hardware, there will be no emergency object to be served as a warning of an error message.

15-2 Wiring for CANopen

An external adapter card: EMC-COP01 is used for CANopen wiring to connect CANopen to C2000. The link is enabled by using RJ45 cable. The two farthest ends must be terminated with 120Ω terminating resistors.

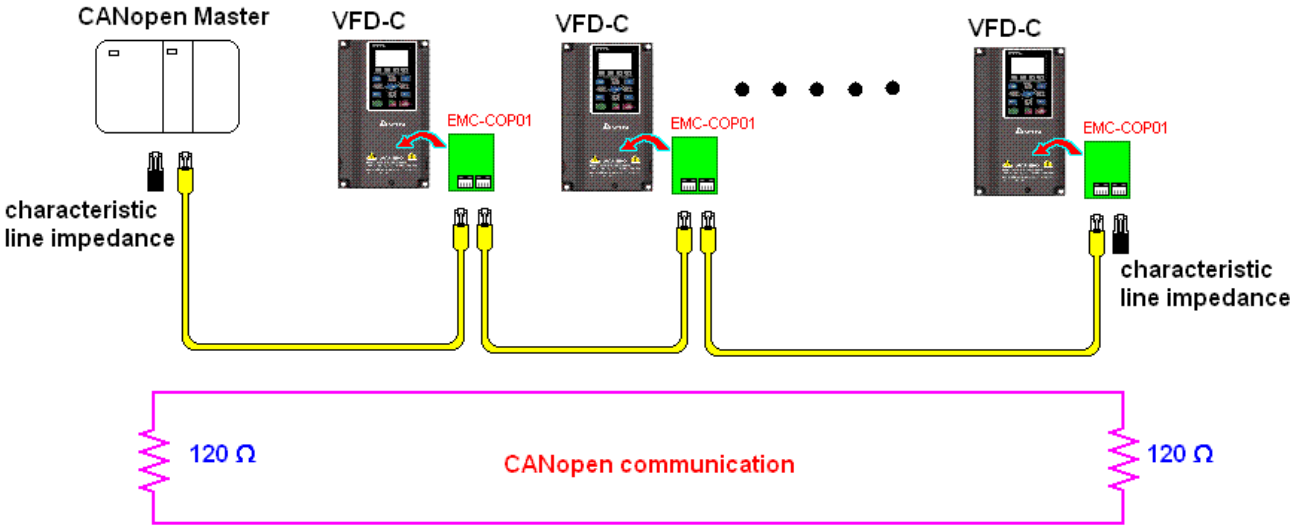

15-3 CANopen Communication Interface Descriptions

15-3-1 CANopen Control Mode Selection

There are two control modes for CANopen; Pr.09-40 set to 1 is the factory setting mode DS402 standard and Pr.09-40 set to 0 is Delta's standard setting mode.

Actually, there are two control modes according to Delta's standard, one is the old control mode (Pr09-30=0).

This control mode can only control the motor drive under frequency control. Another mode is a new standard (Pr09-30=1)

This new control mode allows the motor drive to be controlled under all sorts of mode. Currently, C2000 support speed, torque, position and home mode.

The definition of relating control mode are:

CANopen Control Mode Selection	Control Mode							
	Speed		Torque		Position		Home	
	Index	Description	Index	Description	Index	Description	Index	Description
DS402 standard Pr. 09-40=1	6042-00	Target rotating speed (RPM)	6071-00	Target Torque (%)	607A-00	Target Position	-----	-----
	-----	-----	6072-00	Max. Torque Limit(%)	-----	-----	-----	-----
Delta Standard (Old definition) P09-40=1, P09-30=0	2020-02	Target rotating speed (Hz)	-----	-----	-----	-----	-----	-----
Delta Standard (New definition) P09-40=0, P09-30=1	2060-03	Target rotating speed (Hz)	2060-07	Target Torque (%)	2060-05	Target Position	-----	-----
	2060-04	Torque Limit (%)	2060-08	Speed Limit (Hz)	-----	-----	-----	-----

CANopen Control Mode Selection	Operation Control	
	Index	Description
DS402 standard Pr. 09-40=1	6040-00	Operation Command
	-----	-----
Delta Standard (Old definition) P09-40=1, P09-30=0	2020-01	Operation Command
Delta Standard (New definition) P09-40=0, P09-30=1	2060-01	Operation Command
	-----	-----

CANopen Control Mode Selection	Other	
	Index	Description
DS402 standard Pr. 09-40=1	605A-00	Quick stop processing mode
	605C-00	Disable operation processing mode
Delta Standard (Old definition) P09-40=1, P09-30=0	-----	-----
Delta Standard (New definition) P09-40=0, P09-30=1	-----	-----
	-----	-----

However, you can use some index regardless DS402 or Delta's standard.

For example:

1. Index which are defined as RO attributes.
2. Index correspond to parameters such as (2000 ~200B-XX)
3. Accelerating/Decelerating Index: 604F 6050

15-3-2 DS402 Standard Control Mode

15-3-2-1 Related set up of ac motor drive (by following DS402 standard)

If you want to use DS402 standard to control the motor drive, please follow the steps below:

1. Wiring for hardware (refer to chapter 15-2 Wiring for CANopen)
2. Operation source setting: set Pr.00-21 to 3 for CANopen communication card control.
3. Frequency source setting: set Pr.00.20 to 6. (Choose source of frequency commend from CANopen setting.)
4. Source of torque setting is set by Pr.11-33. (Choose source of torque commend from CANopen setting.)
5. CANopen station setting: set Pr.09-36 (Choose source of position commend from CANopen setting.)
6. Set DS402 as control mode: Pr09-40=1
7. CANopen station setting: set Pr.09-36 (Range of setting is 1~127. When Pr.09-36=0, CANopen slave function is disabled.) (Note: If error arise (CAdE or CANopen memory error) as station setting is completed, press Pr.00-02=7 for reset.)
8. CANopen baud rate setting: set Pr.09.37 (CANBUS Baud Rate: 1M(0), 500K(1), 250K(2), 125K(3), 100K(4) and50K(5))
9. Set multiple input functions to Quick Stop (it can also be enable or disable, default setting is disable). If it is necessary to enable the function, set MI terminal to 53 in one of the following parameter: Pr.02.01 ~Pr.02.08 or Pr.02.26 ~ Pr.02.31. (Note: This function is available in DS402 only.)

15-3-2-2 The status of the motor drive (by following DS402 standard)

According to the DS402 definition, the motor drive is divided into 3 blocks and 9 status as described below.

3 blocks

Power Disable: That means without PWM output
Power Enable: That means with PWM output
Fault: One or more than one error has occurred.

9 status

Start: Power On
Not ready to switch on: The motor drive is initiating.
Switch On Disable: When the motor drive finishes the initiation, it will be at this mode.
Ready to switch on: Warming up before running.
Switch On: The motor derive has the PWM output now, but the reference commend is not effective.
Operate Enable: Able to control normally.
Quick Stop Active: When there is a Quick Stop request, you have to stop running the motor drive.

Fault Reaction Active: The motor drive detects conditions which might trigger error(s).
Fault: One or more than errors has occurred to the motor drive.

Therefore, when the motor drive is turned on and finishes the initiation, it will remain at Ready to Switch on status. To control the operation of the motor drive, you need to change this status to Operate Enable status. The way to change it is to commend the control word's bit0 ~ bit3 and bit7 of the Index 6040H and to pair with Index Status Word (Status Word 0X6041). The control steps and index definition are described as below:

Index 6040

15~9	8	7	6~4	3	2	1	0
Reserved	Halt	Fault Reset	Operation	Enable operation	Quick Stop	Enable Voltage	Switch On

Index 6041

15~14	13~12	11	10	9	8	7	6	5	4	3	2	1	0
Reserved	Operation	Internal limit active	Target reached	Remote	Reserved	Warning	Switch on disabled	Quick stop	Voltage enabled	Fault	Operation enable	Switch on	Ready to switch on

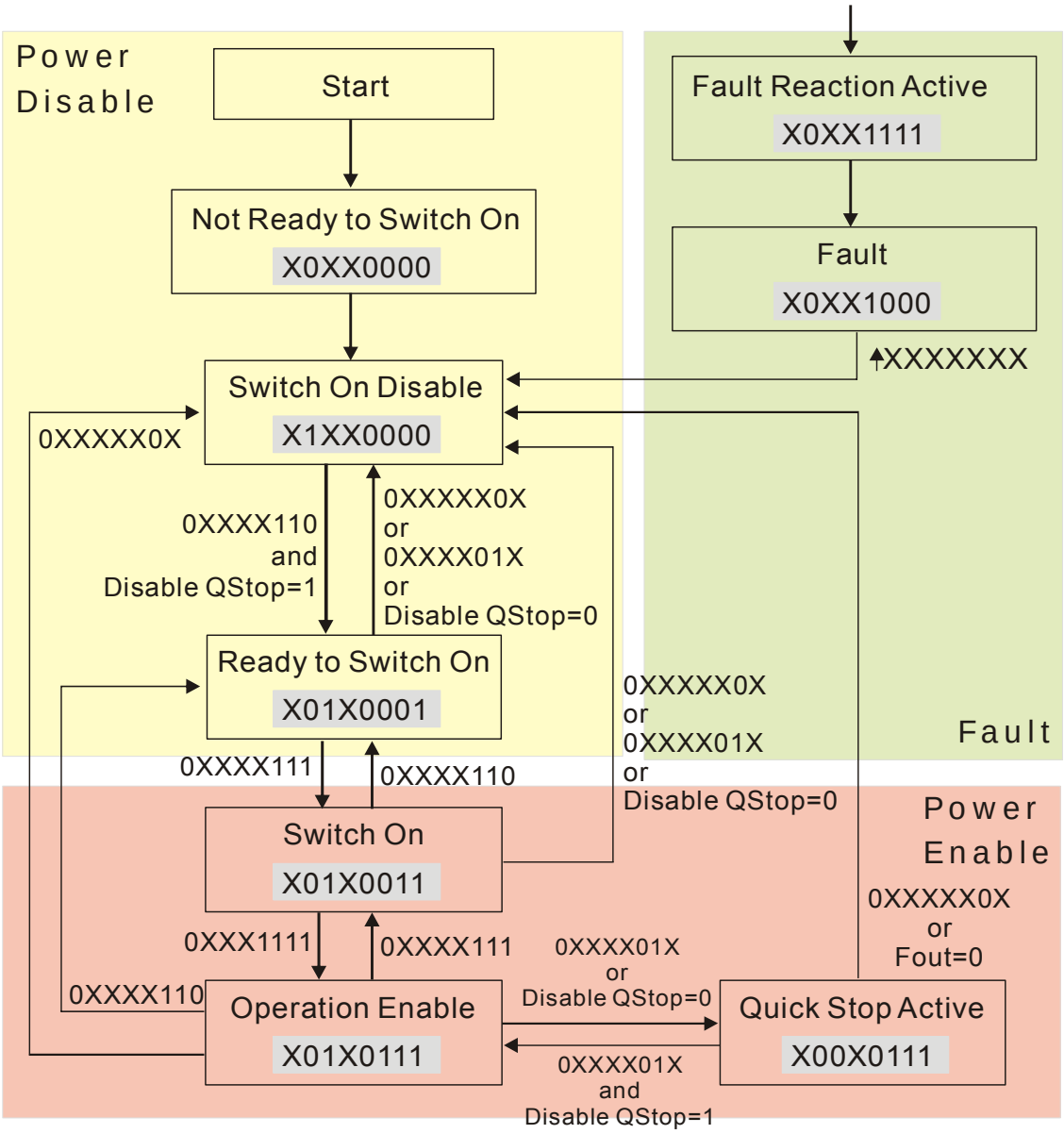

Set command 6040 =0xE, then set another command 6040 =0xF. Then the motor drive can be switched to Operation Enable. The Index 605A decides the dashed line of Operation Enable when the control mode changes from Quick Stop Active. (When the setting value is 1~3, this dashed line is active. But when the setting value of 605A is not 1~3, once he motor derive is switched to Quick Stop Active, it will not be able to switch back to Operation Enable.)

Index	Sub	Definition	Factory Setting	R/W	Size	Unit	PDO Map	Mode	note
605Ah	0	Quick stop option code	2	RW	S16		No		0 : disable drive function
									1 :slow down on slow down ramp
									2: slow down on quick stop ramp
									5 slow down on slow down ramp and stay in QUICK STOP
									6 slow down on quick stop ramp and stay in QUICK STOP
									7 slow down on the current limit and stay in Quick stop

Besides, when the control section switches from Power Enable to Power Disable, use 605C to define parking method.

Index	Sub	Definition	Factory Setting	R/W	Size	Unit	PDO Map	Mode	note
605Ch	0	Disable operation option code	1	RW	S16		No		0: Disable drive function 1: Slow down with slow down ramp; disable of the drive function

15-3-2-3 Various mode control method (by following DS402 standard)

Control mode of C2000, supporting speed, torque, position and home control are described as below:

Speed mode

1. Let Ac Motor Drive be at the speed control mode: Set Index6060 to 2.
2. Switch to Operation Enable mode: Set 6040=0xE, then set 6040 = 0xF.
3. To set target frequency: Set target frequency of 6042, since the operation unit of 6042 is rpm, there is a transformation:

$$n = f \times \frac{120}{p}$$

n: rotation speed (rpm) (rounds/minute) P: motor's pole number (Pole)

f: rotation frequency (Hz)

For example:

Set 6042H = 1500 (rpm), if the motor drive's pole number is 4 (Pr05-04 or Pr05-16), then the motor drive's operation frequency is 1500(120/4)=50Hz.

Besides, the 6042 is defined as a signed operation. The plus or minus sign means to rotate clockwise or counter clockwise

4. To set acceleration and deceleration: Use 604F(Acceleration) and 6050(Deceleration).
5. Trigger an ACK signal: In the speed control mode, the bit 6~4 of Index 6040 needs to be controlled. It is defined as below:

	Index 6040			SUM
	Bit 6	Bit 5	Bit 4	
Speed mode (Index 6060=2)	1	0	1	Locked at the current signal.
	1	1	1	Run to reach targeting signal.
	Other			Decelerate to 0Hz.

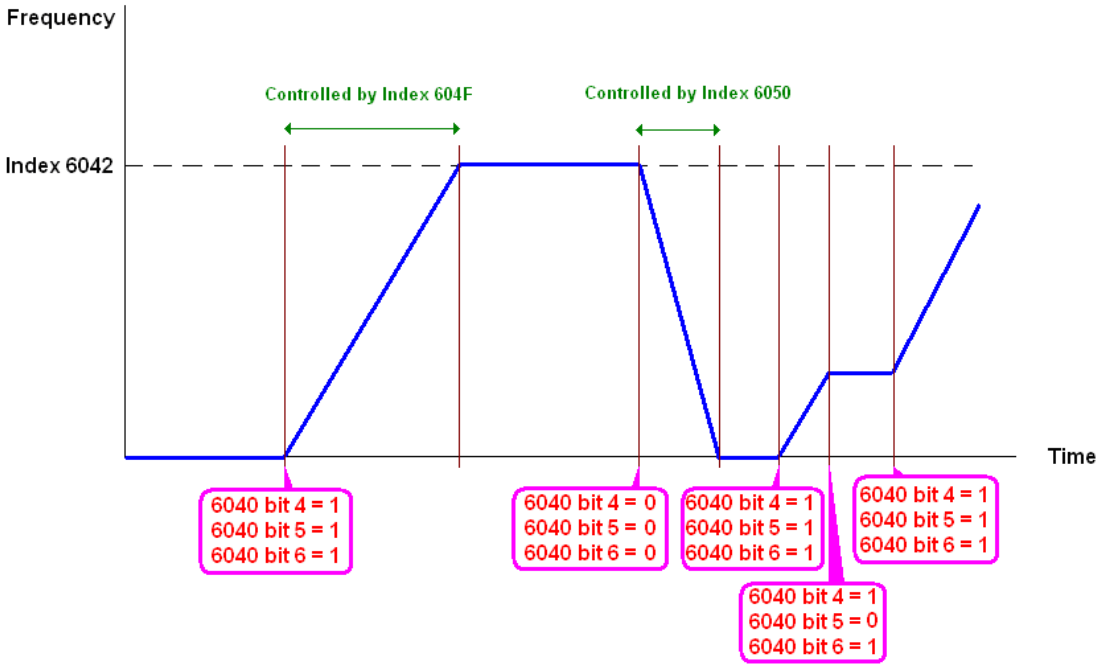

NOTE 01: To know the current rotation speed, read 6043. (unit: rpm)

NOTE 02: To know if the rotation speed can reach the targeting value; read bit 10 of 6041. (0: Not reached; 1: Reached)

Torque mode

1. Let Ac Motor Drive be at the torque control mode: Set Index6060 = 4.
2. Switch the current mode to Operation Enable, set 6040 = 0xE, then set 6040 = 0xF.
3. To set targeting torque: Set 6071 as targeting torque and 6072 as the largest output torque.

Torque mode (Index 6060=4)	Index 6040			SUM
	Bit 6	Bit 5	Bit 4	
	X	X	X	RUN to reach the targeting torque.

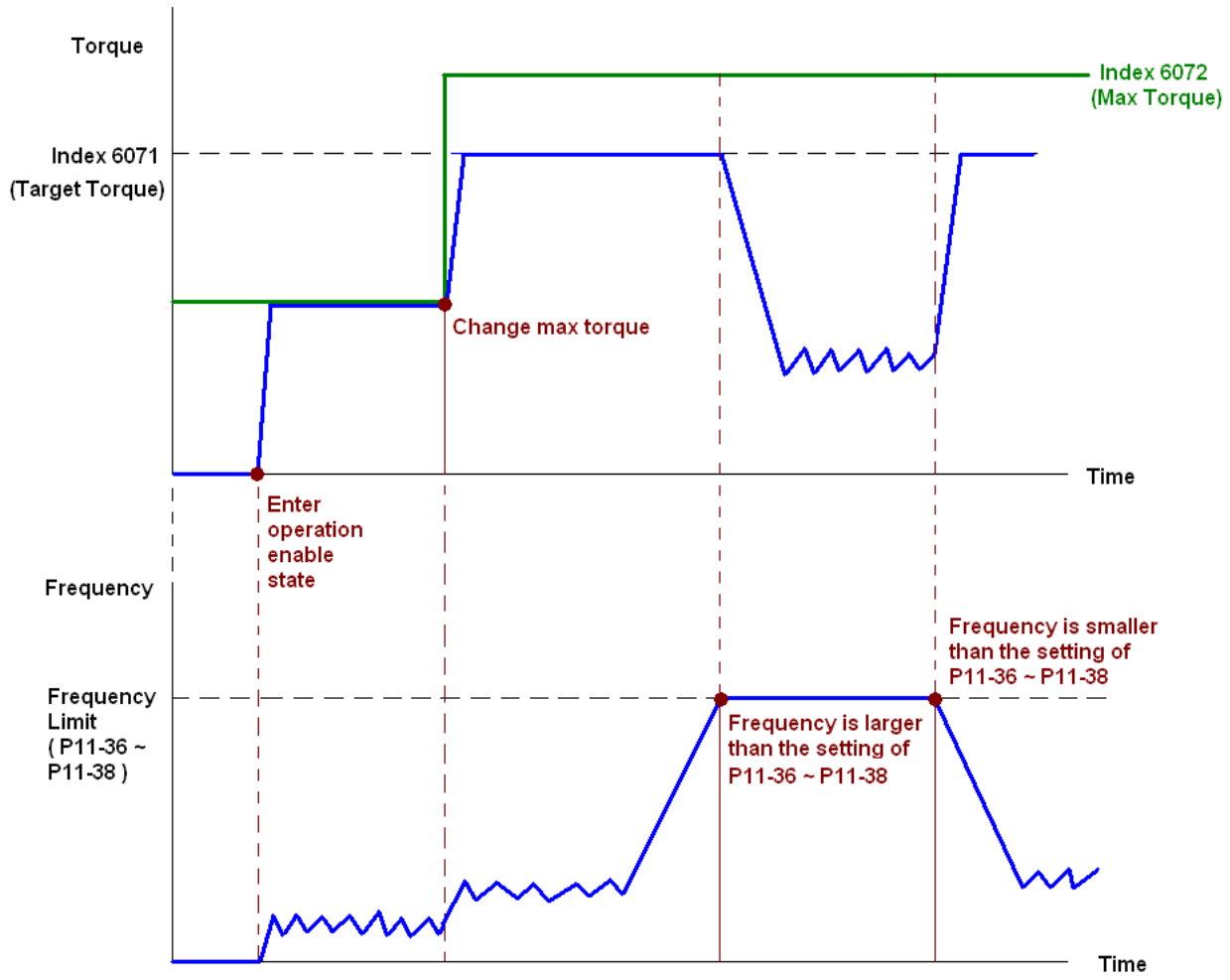

NOTE: The standard DS402 doesn't regulate the highest speed limit. Therefore if the motor drive defines the control mode of DS402, the highest speed will go with the setting of Pr11-36 to Pr11-38.

NOTE 01: To know the current torque, read 6077 (unit: 0.1%).

NOTE02: To know if reaching the targeting torque, read bit 10 of 6041. (0: Not reached; 1: Reached)

Position mode

1. Set the parameter of a trapezium curve to define position control (Pr11-43 Max. Frequency of Point- to-Point Position Control, Pr11-44 Accel. Time of Point-to Point Position Control and Pr11-45 Decel. Time of Point-to Point Position Control)
2. Let Ac Motor Drive be at the position control mode: Then set Index 6060 = 1.
3. Switch the current mode to Operation Enable, set 6040 = 0xE and then set 6040 = 0xF.
4. To set targeting position: set 607A as the targeting position.
5. Trigger an ACK signal: Set 6040 = 0x0F then set 6040 = 0x1F. (Bit4 changes from 0 to 1).

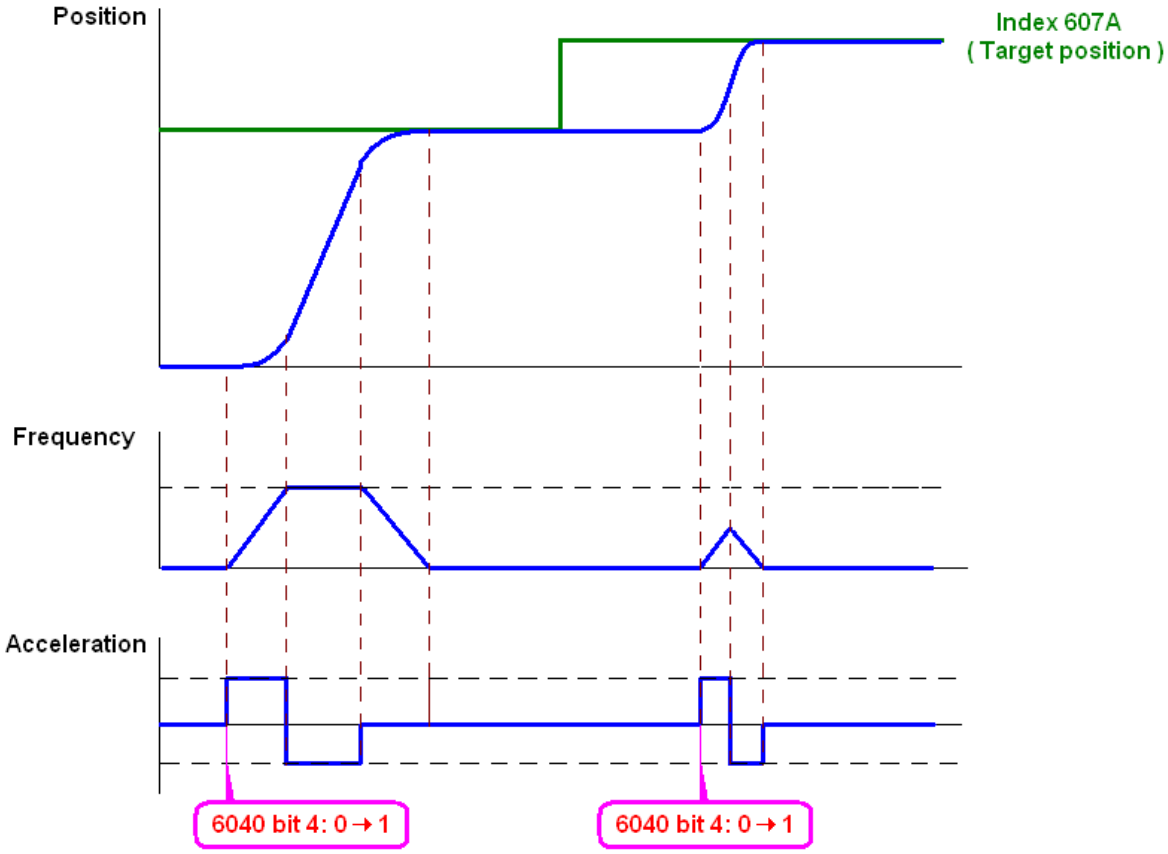

NOTE 01: To know the current position, read 6064.

NOTE 02: To know if the position reaches the targeting position, read bit 10 of 6041. (0: reached, 1: Not reached)

NOTE 03: To know if the position is over the limited area, read bit 11 of 6041 (0: in the limit, 1: over the limit)

Home mode

1. Set Pr00-12 to choose a home method.
2. Set the left and right limits correspond to the position of MI terminal.
3. To switch Ac Motor Drive control mode to Home mode: Set Index 6060 = 6.
4. To switch from current mode to Operation Enable: Set 6040 = 0xE, then set 6040 = 0xF.
5. To trigger an ACK signal: Set 6040 = 0x0F, then set 6040 = 0x1F (Bit4 changes from 0 to 1 and the motor drive will be back to home.)

Note 01: To know if the home mode is completed, read bit 12 of 6041. (0: reached, 1: Not reached)

15-3-3 By using Delta Standard (Old definition, only support speed mode)

15-3-3-1 Various mode control method (by following DS402 standard)

If you want to use DS402 standard to control the motor drive, please follow the steps below:

1. Wiring for hardware (Refer to chapter 15.2 Wiring for CANopen)
2. Operation source setting: set Pr.00-21 to 3 for CANopen communication card control.
3. Frequency source setting: set Pr.00.20 to 6. (Choose source of frequency commend from CANopen setting.)
4. Set Delta Standard (Old definition, only support speed mode) as control mode: Pr. 09-40 = 0 and 09-30 = 0.

   CANopen station setting: set Pr.09-36 (Range of setting is 1~127. When Pr.09-36=0, CANopen slave function is disabled.) (Note: If error arised (CAdE or CANopen memory error) as station setting is completed, press Pr.00-02=7 for reset.)
5. CANopen baud rate setting: set Pr.09.37 (CANBUS Baud Rate: 1M(0), 500K(1), 250K(2), 125K(3), 100K(4) and50K(5))

15-3-3-2 By speed mode

1. Set the target frequency: Set 2020-02, the unit is Hz, with a number of 2 decimal places. For example 1000 is 10.00.
2. Operation control: Set 2020-01 = 0002H for Running, and set 2020-01 = 0001H for Stopping.

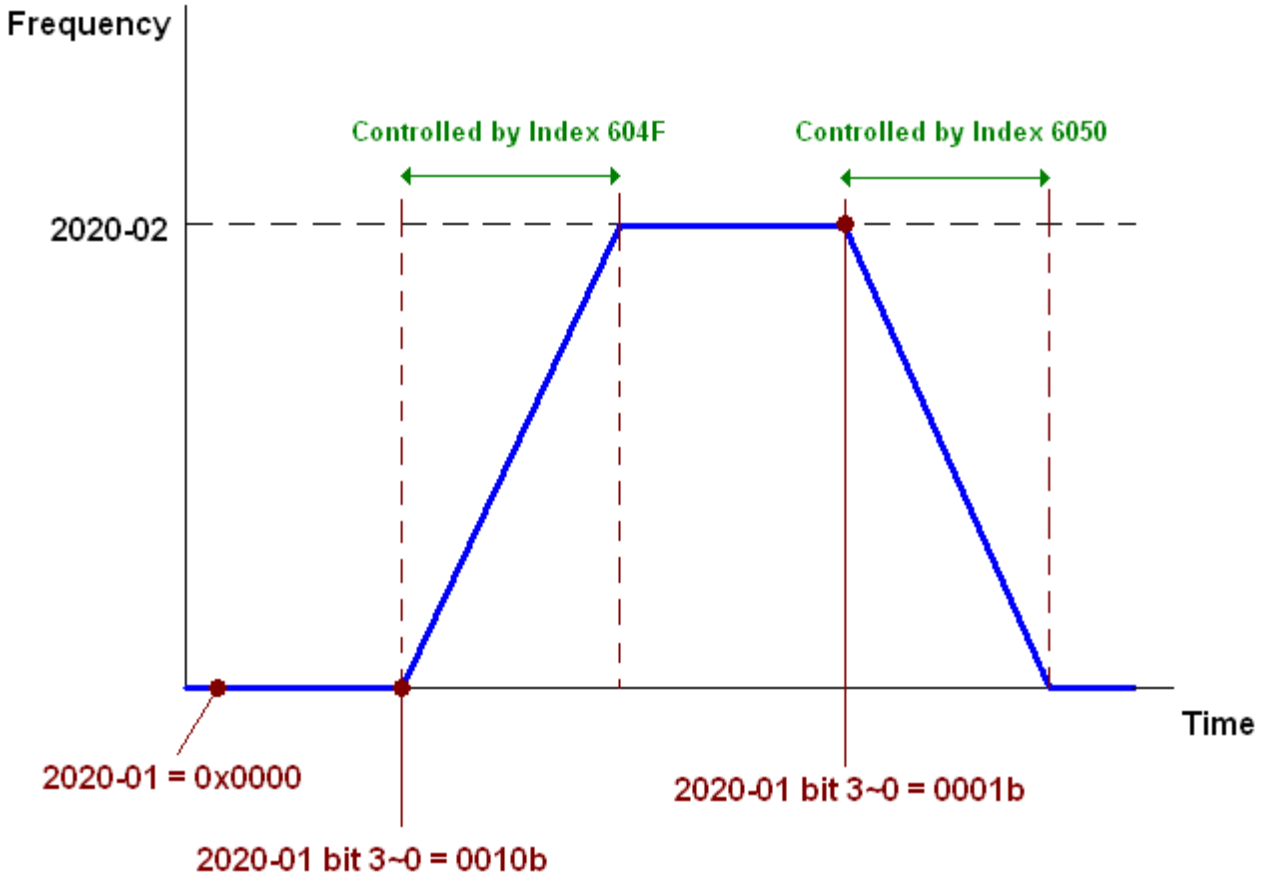

15-3-4 By using Delta Standard (New definition)

15-3-4-1 Related set up of ac motor drive (Delta New Standard)

If you want to use DS402 standard to control the motor drive, please follow the steps below:

1. Wiring for hardware (Refer to chapter 15.2 Wiring for CANopen)
2. Operation source setting: set Pr.00-21 to 3 for CANopen communication card control.
3. Frequency source setting: set Pr.00.20 to 6. (Choose source of frequency commend from CANopen setting.)
4. Source of torque setting is set by Pr.11-33. (Choose source of torque commend from CANopen setting.)
5. CANopen station setting: set Pr.09-36 (Choose source of position commend from CANopen setting.)
6. Set Delta Standard (Old definition, only support speed mode) as control mode: Pr. 09-40 = 0 and 09-30 = 0.
7. CANopen station setting: set Pr.09-36 (Range of setting is 1~127. When Pr.09-36=0, CANopen slave function is disabled.) (Note: If error arised (CAdE or CANopen memory error) as station setting is completed, press Pr.00-02=7 for reset.)
8. CANopen baud rate setting: set Pr.09.37 (CANBUS Baud Rate: 1M(0), 500K(1), 250K(2), 125K(3), 100K(4) and50K(5))

15-3-4-2 Various mode control method (Delta New Standard)

Speed Mode

1. Let Ac Motor Drive be at the speed control mode: Set Index6060 = 2.
2. Set the target frequency: set 2060-03, unit is Hz, with a number of 2 decimal places. For example 1000 is 10.00Hz.
3. Operation control: set 2060-01 = 008H for Server on, and set 2060-01 = 0081H for Running.

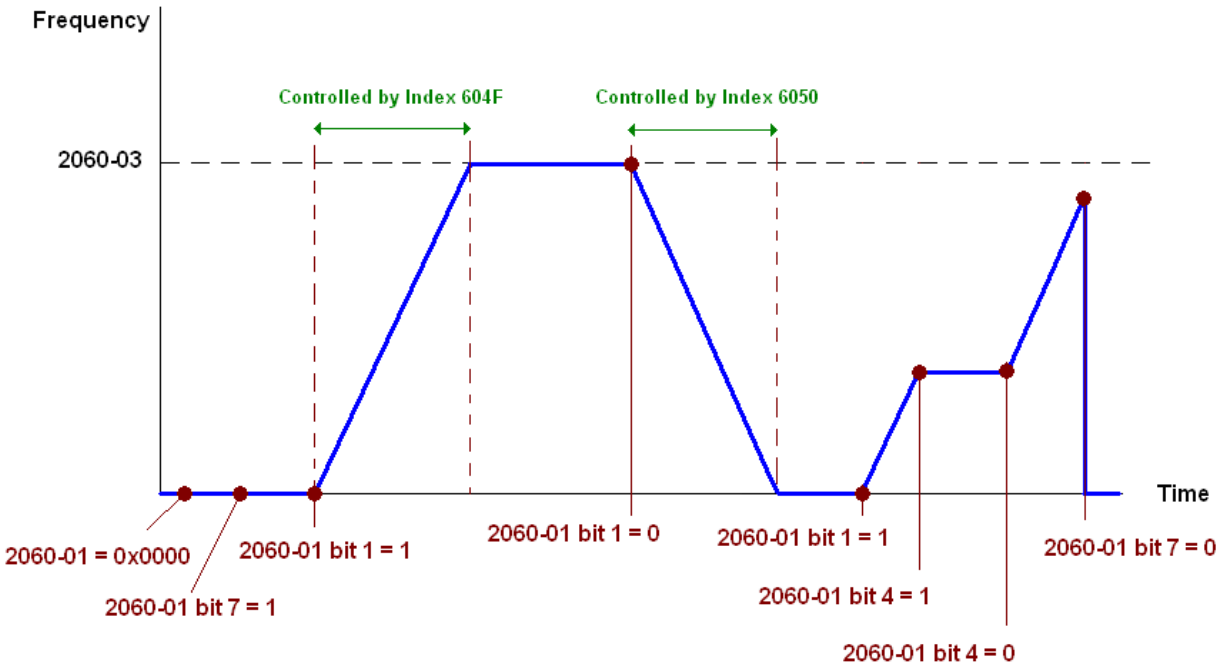

Torque Mode

1. Let Ac Motor Drive be at torque control mode: set Index 6060 = 4.
2. Set target torque: set 2060-07, unit is %, a number of 1 decimal place. For example 100 is 10.0%.
3. Operation control: Set 2060-01 = 0080H for Server on, then the motor drive will start to run to reach target torque.

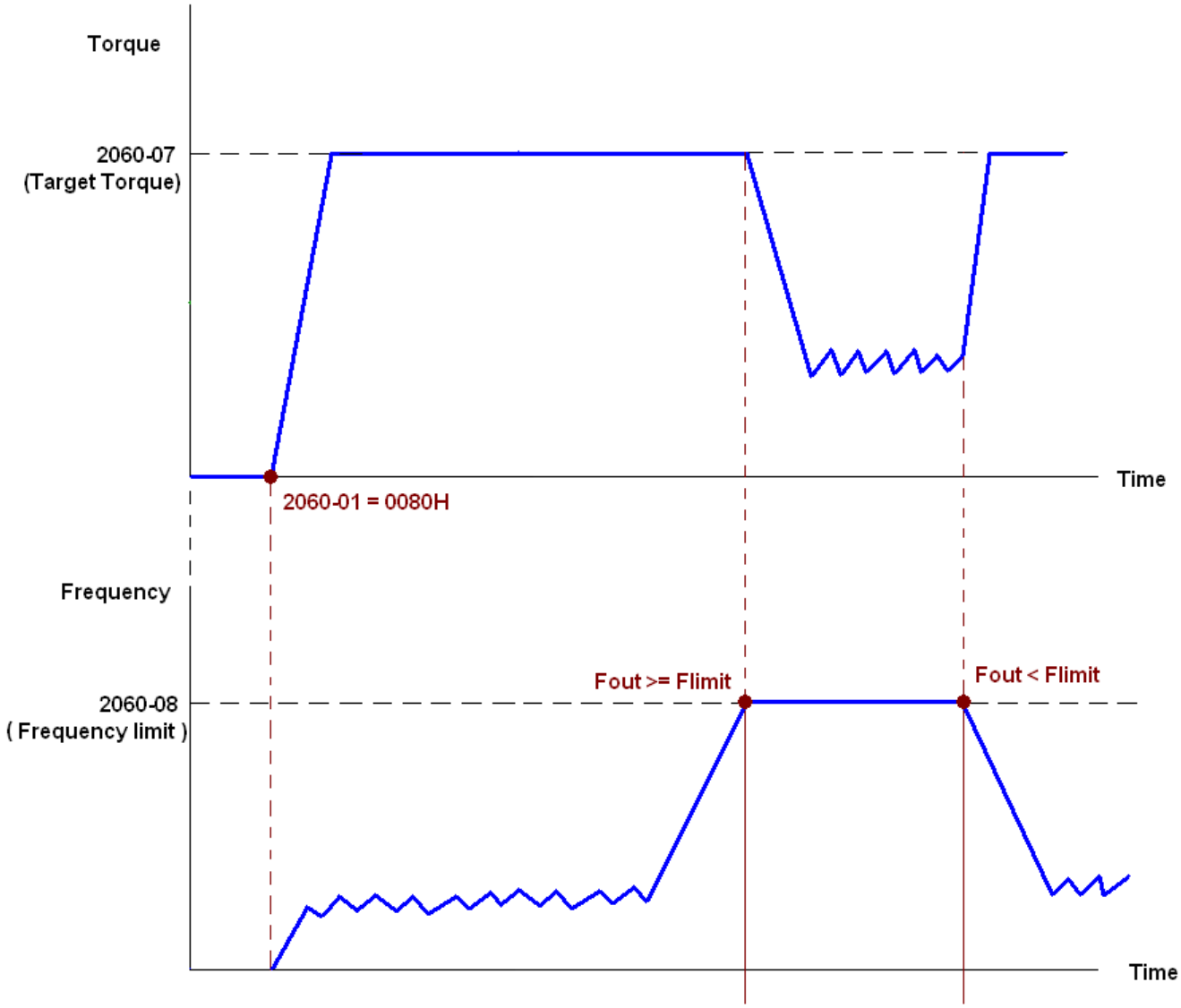

Note01 To know what the current torque is, read 2061-07 (unit is 0.1%).

Note02 To know if the torque can reach the setting value, read the bit 0 of 2061-01 (0: Not reached, 1: Reached).

Note 03: When doing torque output and if the motor drive's speed reaches the speed limit, the output torque will decrease to ensure the speed is under the limit.

Position Mode

1. Set the parameter of a trapezium curve to define position control (Pr11-43 Max. Position Control Frequency), Pr11-44 Accel. Time of Position Control, Pr11-45 Decel. Time of Position Control)
2. Let Ac motor drive be at the position control mode, set Index 6060 = 1.
3. Set 2060-01 = 0080h, then motor drive will have server on.
4. Set target position: set 2060-05 = target position.
5. Set 2060-01 =0081h to trigger the motor drive to run to the target position.

6. To move to another position, simply repeat step 3 to 5.

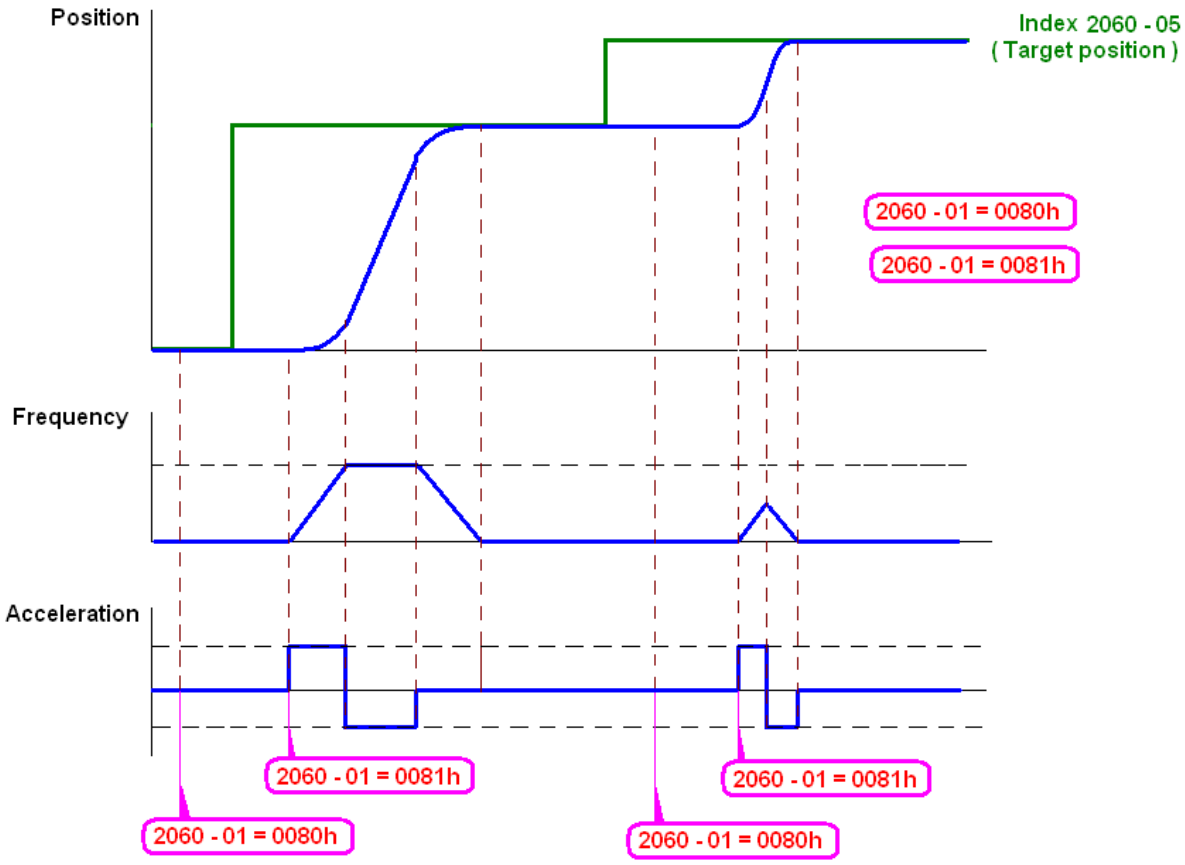

NOTE01: To know the current position, read 2061-05.

NOTE02: To know if reaching the target position, read bit 0 of 2061 (0: Not reached, 1: Reached).

Home Mode

1. Set Pr00-12 to choose how to return home.
2. Set the left and right limits correspond to the position of MI terminal.
3. To switch C2000 control mode to Home mode: Set Index 6060 = 6.
4. Set 2060-01 = 0080h, then motor drive will have server on.
5. Set the ACK signal: set 2060-01 = 0081h, then the motor drive will start to go back home.

NOTE 01: To know if returning home is completed, read bit12 of 6041 (0: Not reached, 1: Reached).

15-3-5 DI/DO AI AO are controlled via CANopen

To control the DO AO of the motor drive through CANopen, follow the steps below:

1. To set the DO to be controlled, define this DO to be controlled by CANopen. For example, set Pr02-14 to control RY2.
2. To set the DO to be controlled, define this AO to be controlled by CANopen. For example, set Pr03-23 to control AFM2.
3. To control the mapping index of CANopen. If you want to control DO, then you will need to control Index2026-41. If you want to control AO, then you will need to control 2026-AX. If you want to set RY2 as ON, set the bit 1 of Index 2026-41 =1, then RY2 will output 1. If you want to control AFM2 output = 50.00%, then you will need to set Index 2026-A2 =5000, then AFM2 will output 50%.

Mapping table of CANopen DI DO AI AO:

DI:

Terminal	Related Parameters	R/W	Mapping Index
FWD	==	RO	2026-01 bit 0
REV	==	RO	2026-01 bit 1
MI 1	==	RO	2026-01 bit 2
MI 2	==	RO	2026-01 bit 3
MI 3	==	RO	2026-01 bit 4
MI 4	==	RO	2026-01 bit 5
MI 5	==	RO	2026-01 bit 6
MI 6	==	RO	2026-01 bit 7
MI 7	==	RO	2026-01 bit 8
MI 8	==	RO	2026-01 bit 9
MI 10	==	RO	2026-01 bit 10
MI 11	==	RO	2026-01 bit 11
MI 12	==	RO	2026-01 bit 12
MI 13	==	RO	2026-01 bit 13
MI 14	==	RO	2026-01 bit 14
MI 15	==	RO	2026-01 bit 15

DO：

Terminal	Related Parameters	R/W	Mapping Index
RY1	P2-13 = 50	RW	2026-41 bit 0
RY2	P2-14 = 50	RW	2026-41 bit 1
	P2-15 = 50	RW	2026-41 bit 2
MO1	P2-16 = 50	RW	2026-41 bit 3
MO2	P2-17 = 50	RW	2026-41 bit 4
MO3	P2-18 = 50	RW	2026-41 bit 5
MO4	P2-19 = 50	RW	2026-41 bit 6

Terminal	Related Parameters	R/W	Mapping Index
MO5	P2-20 = 50	RW	2026-41 bit 7
MO6	P2-21 = 50	RW	2026-41 bit 8
MO7	P2-22 = 50	RW	2026-41 bit 9
MO8	P2-23 = 50	RW	2026-41 bit 10

AI：

Terminal	Related Parameters	R/W	Mapping Index
AVI	==	RO	Value of 2026-61
ACI	==	RO	Value of 2026-62
AUI	==	RO	Value of 2026-63

AO：

Terminal	Related Parameters	R/W	Mapping Index
AFM1	P3-20 = 20	RW	Value of 2026-A1
AFM2	P3-23 = 20	RW	Value of 2026-A2

15-4 CANopen Supporting Index

C2000 Index:

Parameter index corresponds to each other as following:

Index	**sub-Index**
2000H + Group	member+1

For example:

Pr.10.15 (Encoder Slip Error Treatment)

Group		**member**
10(0$\overline{A}$H)	-	15(0FH)

Index = 2000H + 0AH = 200A

Sub Index = 0FH + 1H = 10H

C2000 Control Index:

Delta Standard Mode (Old definition)

Index	Sub	Definition	Factory Setting	R/W	Size	Note	
2020H	0	Number	3	R	U8		
	1	Control word	0	RW	U16	Bit 1~0	00B:disable
							01B:stop
							10B:disable
							11B: JOG Enable
						Bit3~2	Reserved
						Bit5~4	00B:disable
							01B: Direction forward
							10B: Reverse
							11B: Switch Direction
						Bit7~6	00B: 1st step Accel. /Decel.
							01B: 2nd step Accel. /Decel.
							10B: 3rd step Accel. /Decel.
							11B: 4th step Accel. /Decel.
						Bit11~8	0000B: Master speed
							0001B: 1st step speed
							0010B: 2nd step speed
							0011B: 3rd step speed
							0100B: 4th step speed
							0101B: 5th step speed
							0110B: 6th step speed
							0111B: 7th step speed
							1000B: 8th step speed
							1001B: 9th step speed
							1010B: 10th step speed
							1011B: 11th step speed
							1100B: 12th step speed
							1101B: 13th step speed
							1110B: 14th step speed
							1111B: 15th step speed
						Bit12	1: Enable the function of Bit6-11
						Bit14~13	00B: no function
							01B: Operation command by the digital keypad

Index	Sub	Definition	Factory Setting	R/W	Size	Note	
							10B: Operation command by Pr. 00-21 setting
							11B: Switch the source of operation command
						Bit 15	Reserved
	2	Freq. command (XXX.XXHz)	0	RW	U16		
	3	Other trigger	0	RW	U16	Bit0	1: E.F. ON
						Bit1	1: Reset
						Bit15~2	Reserved
2021H	0	Number	DH	R	U8		
	1	Error code	0	R	U16		
	2	AC motor drive status	0	R	U16	Bit 1~0	00B: stop
							01B: decelerate to stop
							10B: waiting for operation command
							11B: in operation
						Bit 2	1: JOG command
						Bit 4~3	00B: forward running
							01B: switch from reverse running to forward running
							10B: switch from forward running to reverse running
							11B: reverse running
						Bit 7~5	Reserved
						Bit 8	1: master frequency command controlled by communication interface
						Bit 9	1: master frequency command controlled by analog signal input
						Bit 10	1: operation command controlled by communication interface
						Bit 15~11	Reserved
	3	Freq. command (XXX.XXHz)	0	R	U16		
	4	Output freq. (XXX.XXHz)	0	R	U16		
	5	Output current (XX.XA)	0	R	U16		
	6	DC bus voltage (XXX.XV)	0	R	U16		
	7	Output voltage (XXX.XV)	0	R	U16		
	8	the current segment run by the multi-segment speed commend	0	R	U16		
	9	Reserved	0	R	U16		
	A	Display counter value（c）	0	R	U16		
	B	Display output power angle (XX.X°)	0	R	U16		
	C	Display output torque (XXX.X%)	0	R	U16		
	D	Display actual motor speed (rpm)	0	R	U16		
	E	Number of PG feed back pulses (0~65535)	0	R	U16		
	F	Number of PG2 pulse commands (0~65535)	0	R	U16		
	10	power output (X.XXXKWH)	0	R	U16		
2022H	0	Reserved	0	R	U16		
	1	Display output current	0	R	U16		

Index	Sub	Definition	Factory Setting	R/W	Size	Note	
	2	Display counter value	0	R	U16		
	3	Display actual output frequency (XXX.XXHz)	0	R	U16		
	4	Display DC-BUS voltage (XXX.XV)	0	R	U16		
	5	Display output voltage (XXX.XV)	0	R	U16		
	6	Display output power angle (XX.X°)	0	R	U16		
	7	Display output power in kW	0	R	U16		
	8	Display actual motor speed (rpm)	0	R	U16		
	9	Display estimate output torque (XXX.X%)	0	R	U16		
	A	Display PG feedback	0	R	U16		
	B	Display PID feedback value after enabling PID function in % (To 2 decimal places)	0	R	U16		
	C	Display signal of AVI analog input terminal, 0-10V corresponds to 0-100% (To 2 decimal places)	0	R	U16		
	D	Display signal of ACI analog input terminal, 4-V20mA/0-10V corresponds to 0-100% (To 2 decimal places)	0	R	U16		
	E	Display signal of AUI analog input terminal, -10V~10V corresponds to -100~100% (To 2 decimal places)	0	R	U16		
	F	Display the IGBT temperature of drive power module in ^{o}C	0	R	U16		
	10	Display the temperature of capacitance in ^{o}C	0	R	U16		
	11	The status of digital input (ON/OFF), refer to Pr.02-12	0	R	U16		
	12	The status of digital output (ON/OFF), refer to Pr.02-18	0	R	U16		
	13	Display the multi-step speed that is executing	0	R	U16		
	14	The corresponding CPU pin status of digital input	0	R	U16		
	15	The corresponding CPU pin status of digital output	0	R	U16		
	16	Number of actual motor revolution (PG1 of PG card). it will start from 9 when the actual operation direction is changed or keypad display at stop is 0. Max. is 65535	0	R	U16		
	17	Pulse input frequency (PG2 of PG card)	0	R	U16		
	18	Pulse input position (PG card PG2), maximum setting is 65535.	0	R	U16		
	19	Position command tracing error	0	R	U16		
	1A	Display times of counter overload (0.00~100.00%)	0	R	U16		

Index	Sub	Definition	Factory Setting	R/W	Size	Note	
	1B	Display GFF in %	0	R	U16		
	1C	Display DCbus voltage ripples (Unit: Vdc)	0	R	U16		
	1D	Display PLC register D1043 data	0	R	U16		
	1E	Display Pole of Permanent Magnet Motor	0	R	U16		
	1F	User page displays the value in physical measure	0	R	U16		
	20	Output Value of Pr.00-05	0	R	U16		
	21	Number of motor turns when drive operates	0	R	U16		
	22	Operation position of motor	0	R	U16		
	23	Fan speed of the drive	0	R	U16		
	24	Control mode of the drive 0: speed mode 1: torque mode	0	R	U16		
	25	Carrier frequency of the drive	0	R	U16		

CANopen Remote IO mapping

Index	Sub	R/W	Definition
2026H	01h	R	Each bit corresponds to the different input terminals
	02h	R	Each bit corresponds to the different input terminals
	03h~40h	R	Reserved
	41h	RW	Each bit corresponds to the different output terminals
	42h~60h	R	Reserved
	61h	R	AVI (%)
	62h	R	ACI (%)
	63h	R	AUI (%)
	64h~A0h	R	Reserved
	A1h	RW	AFM1 (%)
	A2h	RW	AFM2 (%)

Delta Standard Mode (New definition)

Index	sub	R/W	Size	Descriptions			Speed Mode	Position Mode	Home Mode	Torque Mode
				bit	Definition	Priority				
2060h	00h	R	U8							
	01h	RW	U16	0	Ack	4	0:fcmd =0 1:fcmd = Fset(Fpid)	Pulse 1: Position control	Pulse 1: Return to home	
				1	Dir	4	0: FWD run command 1: REV run command			
				2						
				3	Halt		0: drive run till target speed is attained 1: drive stop by declaration setting			
				4	Hold		0: drive run till target speed is attained 1: frequency stop at current frequency			
				5	JOG		0:JOG OFF Pulse 1:JOG RUN			
				6	QStop		Quick Stop			

Index	sub	R/W	Size	Descriptions			Speed Mode	Position Mode	Home Mode	Torque Mode
				bit	Definition	Priority				
				7	Power		0:Power OFF 1:Power ON	0:Power OFF 1:Power ON	0:Power OFF 1:Power ON	0:Power OFF 1:Power ON
				14~8	Cmd SW		Multi-step frequency switching	Multi-step position switching		
				15			Pulse 1: Fault code cleared	Pulse 1: Fault code cleared	Pulse 1: Fault code cleared	Pulse 1: Fault code cleared
	02h	RW	U16							
	03h	RW	U16				Speed command (unsigned decimal)			
	04h	RW	U16							
	05h	RW	S32					Position command		
	06h	RW								
	07h	RW	U16							Torque command (signed decimal)
	08h	RW	U16							Speed limit (unsigned decimal)
2061h	01h	R	U16	0	Arrive		Frequency attained	Position attained	Homing complete	Torque attained
				1	Dir		0: Motor FWD run 1: Motor REV run	0: Motor FWD run 1: Motor REV run	0: Motor FWD run 1: Motor REV run	0: Motor FWD run 1: Motor REV run
				2	Warn		Warning	Warning	Warning	Warning
				3	Error		Error detected	Error detected	Error detected	Error detected
				4						
				5	JOG		JOG	JOG	JOG	JOG
				6	QStop		Quick stop	Quick stop	Quick stop	Quick stop
				7	Power On		Switch ON	Switch ON	Switch ON	Switch ON
				15~8						
	02h	R								
	03h	R	U16				Actual output frequency	Actual output frequency	Actual output frequency	Actual output frequency
	04h	R								
	05h	R	S32				Actual position (absolute)	Actual position (absolute)	Actual position (absolute)	Actual position (absolute)
	06h	R								
	07h	R	S16				Actual torque	Actual torque	Actual torque	Actual torque

DS402 Standard

Index	Sub	Definition	Factory Setting	R/W	Size	Unit	PDO Map	Mode	Note
6007h	0	Abort connection option code	2	RW	S16		Yes		0: No action 2: Disable Voltage, 3: quick stop
603Fh	0	Error code	0	R0	U16		Yes		
6040h	0	Control word	0	RW	U16		Yes		
6041h	0	Status word	0	R0	U16		Yes		
6042h	0	vl target velocity	0	RW	S16	rpm	Yes	vl	
6043h	0	vl velocity demand	0	RO	S16	rpm	Yes	vl	
6044h	0	vl control effort	0	RO	S16	rpm	Yes	vl	
604Fh	0	vl ramp function time	10000	RW	U32	1ms	Yes	vl	Unit must be: 100ms, and check if the setting is set to 0.
6050h	0	vl slow down time	10000	RW	U32	1ms	Yes	vl	
6051h	0	vl quick stop time	1000	RW	U32	1ms	Yes	vl	
605Ah	0	Quick stop option code	2	RW	S16		No		0 : disable drive function 1 :slow down on slow down ramp 2: slow down on quick stop ramp

Index	Sub	Definition	Factory Setting	R/W	Size	Unit	PDO Map	Mode	Note
									5 slow down on slow down ramp and stay in QUICK STOP
									6 slow down on quick stop ramp and stay in QUICK STOP
605Ch	0	Disable operation option code	1	RW	S16		No		0: Disable drive function 1: Slow down with slow down ramp; disable of the drive function
6060h	0	Mode of operation	2	RW	S8		Yes		1: Profile Position Mode 2: Velocity Mode 4: Torque Profile Mode 6: Homing Mode
6061h	0	Mode of operation display	2	RO	S8		Yes		Same as above
6064h	0	pp Position actual value	0	RO	S32		Yes	pp	
6071h	0	tq Target torque	0	RW	S16	0.1%	Yes	tq	Valid unit: 1%
6072h	0	tq Max torque	150	RW	U16	0.1%	No	tq	Valid unit: 1%
6075h	0	tq Motor rated current	0	RO	U32	mA	No	tq	
6077h	0	tq torque actual value	0	RO	S16	0.1%	Yes	tq	
6078h	0	tq current actual value	0	RO	S16	0.1%	Yes	tq	
6079h	0	tq DC link circuit voltage	0	RO	U32	mV	Yes	tq	
607Ah	0	pp Target position	0	RW	S32	1	Yes	pp	

15-5 CANopen Fault Code

Display	Fault code	Description	CANopen fault code	CANopen fault register (bit 0~7)
HAND Fault ocA Oc at accel	0001H	Over-current during acceleration	2213 H	1
HAND Fault ocd Oc at decel	0002H	Over-current during deceleration	2213 H	1
HAND Fault ocn Oc at normal SPD	0003H	Over-current during steady status operation	2214H	1
HAND Fault GFF Ground fault	0004H	Ground fault. When (one of) the output terminal(s) is grounded, short circuit current is more than 50% of AC motor drive rated current. NOTE: The short circuit protection is provided for AC motor drive protection, not for protection of the user.	2240H	1
HAND Fault occ Short Circuit	0005H	Short-circuit is detected between upper bridge and lower bridge of the IGBT module.	2250H	1
HAND Fault ocS Oc at stop	0006H	Over-current at stop. Hardware failure in current detection	2314H	1
HAND Fault ovA Ov at accel	0007H	Over-current during acceleration. Hardware failure in current detection	3210H	2
HAND Fault ovd Ov at decel	0008H	Over-current during deceleration. Hardware failure in current detection.	3210H	2
HAND Fault ovn Ov at normal SPD	0009H	Over-current during steady speed. Hardware failure in current detection.	3210H	2
HAND Fault ovS Ov at stop	000AH	Over-voltage at stop. Hardware failure in current detection	3210H	2

Display	Fault code	Description	CANopen fault code	CANopen fault register (bit 0~7)
HAND Fault LvA Lv at accel	000BH	DC BUS voltage is less than Pr.06.00 during acceleration.	3220H	2
HAND Fault Lvd Lv at decel	000CH	DC BUS voltage is less than Pr.06.00 during deceleration.	3220H	2
HAND Fault Lvn Lv at normal SPD	000DH	DC BUS voltage is less than Pr.06.00 in constant speed.	3220H	2
HAND Fault LvS Lv at stop	000EH	DC BUS voltage is less than Pr.06-00 at stop	3220H	2
HAND Fault OrP Phase Lacked	000FH	Phase Loss Protection	3130H	2
HAND Fault oH1 IGBT over heat	0010H	IGBT overheat IGBT temperature exceeds protection level. 1~15HP: 90℃ 20~100HP: 100℃	4310H	3
HAND Fault oH2 Hear Sink oH	0011H	Heat sink overheat Heat sink temperature exceeds 90oC	4310H	3
HAND Fault tH1o Thermo 1 open	0012H	Temperature detection circuit error (IGBT) IGBT NTC	FF00H	3
HAND Fault tH2o Thermo 2 open	0013H	Temperature detection circuit error (capacity module) CAP NTC	FF01H	3
HAND Fault PWR Power RST OFF	0014H	Power RST off	FF02H	2
HAND Fault oL Inverter oL	0015H	Overload. The AC motor drive detects excessive drive output current. NOTE: The AC motor drive can withstand up to 150% of the rated current for a maximum of 60 seconds.	2310H	1

Display	Fault code	Description	CANopen fault code	CANopen fault register (bit 0~7)
HAND Fault EoL1 Thermal relay 1	0016H	Electronics thermal relay 1 protection	2310H	1
HAND Fault EoL2 Thermal relay 2	0017H	Electronics thermal relay 2 protection	2310H	1
HAND Fault ot1 Over torque 1	001AH	These two fault codes will be displayed when output current exceeds the over-torque detection level (Pr.06.07 or Pr.06.10) and exceeds over-torque detection (Pr.06.08 or Pr.06.11) and it is set 2 or 4 in Pr.06-06 or Pr.06-09.	8311H	3
HAND Fault ot2 Over torque 2	001BH		8311H	3
HAND Fault uC Under torque 1	001CH	Low current	8321H	1
HAND Fault cF1 EEPROM write Err	001EH	Internal EEPROM can not be programmed.	5530H	5
HAND Fault cF2 EEPROM read Err	001FH	Internal EEPROM can not be read.	5530H	5
HAND Fault cd1 Ias sensor Err	0021H	U-phase error	FF04H	1
HAND Fault cd2 Ibs sensor Err	0022H	V-phase error	FF05H	1
HAND Fault cd3 Ics sensor Err	0023H	W-phase error	FF06H	1
HAND Fault Hd0 cc HW Error	0024H	cc (current clamp) hardware error	FF07H	5

Display	Fault code	Description	CANopen fault code	CANopen fault register (bit 0~7)
HAND Fault Hd1 oc HW Error	0025H	oc hardware error	FF08H	5
HAND Fault Hd2 ov HW Error	0026H	ov hardware error	FF09H	5
HAND Fault Hd3 GFF HW Error	0027H	GFF hardware error	FF0AH	5
HAND Fault AUE Auto tuning Err	0028H	Auto tuning error	FF21H	1
HAND Fault AFE PID Fbk Error	0029H	PID loss (ACI)	FF22H	7
HAND Fault PGF1 PG Fbk Error	002AH	PG feedback error	7301H	7
HAND Fault PGF2 PG Fbk Loss	002BH	PG feedback loss	7301H	7
HAND Fault PGF3 PG Fbk Over SPD	002BH	PG feedback stall	7301H	7
HAND Fault PGF4 PG Fbk deviate	002CH	PG slip error	7301H	7
HAND Fault ACE ACI loss	0030H	ACI loss	FF25H	1
HAND Fault EF External Fault	0031H	External Fault When input EF (N.O.) on external terminal is closed to GND, AC motor drive stops output U, V, and W.	9000H	5

Display	Fault code	Description	CANopen fault code	CANopen fault register (bit 0~7)
HAND Fault EF1 Emergency stop	0032H	Emergency stop When the multi-function input terminals MI1 to MI6 are set to emergency stop, the AC motor drive stops output U, V, W and the motor coasts to stop.	9000H	5
HAND Fault bb Base block	0033H	External Base Block When the external input terminals MI1 to MI16 are set as bb and active, the AC motor drive output will be turned off	9000H	5
HAND Fault Pcod Password Error	0034H	Password will be locked if three fault passwords are entered	FF26H	5
HAND Fault ccod SW code Error	0035H	Software error	6100H	5
HAND Fault cE1 Modbus CMD err	0036H	Illegal function code	7500H	4
HAND Fault cE2 Modbus ADDR err	0037H	Illegal data address (00H to 254H)	7500H	4
HAND Fault cE3 Modbus DATA err	0038H	Illegal data value	7500H	4
HAND Fault cE4 Modbus slave FLT	0039H	Data is written to read-only address	7500H	4
HAND Fault cE10 Modbus time out	003AH	Modbus transmission timeout.	7500H	5
HAND Fault bF Braking fault	003CH	Brake resistor fault	7110H	4

Display	Fault code	Description	CANopen fault code	CANopen fault register (bit 0~7)
HAND Fault ydc Y-delta connect	003DH	Motor Y-Δ switch error	3330H	2
HAND Fault dEb Dec. Energy back	003EH	Energy regeneration when decelerating	FF27H	2
HAND Fault oSL Over slip Error	003FH	Over slip error. Slip exceeds Pr.05.26 limit and slip duration exceeds Pr.05.27 setting.	FF28H	7
HAND Fault PGF5 PG HW Error	0041H	PG Card Error	FF29H	5
HAND Fault ocU Unknow Over Apm	0042H	over current caused by unknown reason	2310H	1
HAND Fault ovU Unknow Over volt.	0043H	over voltage caused by unknown reason	3210H	2
HAND Fault S1 S1-Emergy stop	0049H	external safety emergency stop	FF2AH	5
HAND Fault OPHL U phase lacked	0052H	U phase output phase loss	2331H	2
HAND Fault OPHL U phase lacked	0053H	V phase output phase loss	2332H	2
HAND Fault OPHL U phase lacked	0054H	W phase output phase loss	2333H	2
HAND Fault aocc A phase short	004FH	A phase short	FF2BH	1

Display	Fault code	Description	CANopen fault code	CANopen fault register (bit 0~7)
HAND Fault bocc B phase short	0050H	B phase short	FF2CH	1
HAND Fault cocc C phase short	0051H	C phase short	FF2DH	1
HAND Fault CGdE Guarding T-out	0065H	Guarding time-out 1	8130H	4
HAND Fault CHbE Heartbeat T-out	0066H	Heartbeat time-out	8130H	4
HAND Fault CSyE SYNC T-out	0067H	CAN synchrony error	8700H	4
HAND Fault CbFE CAN/S bus off	0068H	CAN bus off	8140H	4
HAND Fault CIdE CAN/S Idx exceed	0069H	Can index exceed	8110H	4
HAND Fault CAdE CAN/S add. set	006AH	CAN address error	0x8100	4
HAND Fault CFdE CAN/S FRAM fail	006BH	CAN frame fail	0x8100	4

15-6 CANopen LED Function

There are two CANopen flash signs: RUN and ERR.

RUN LED:

LED status	Condition	CANopen State
OFF		Initial
Blinking	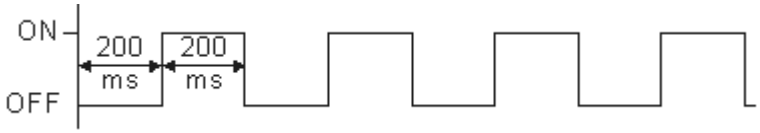	Pre-Operation
Single flash	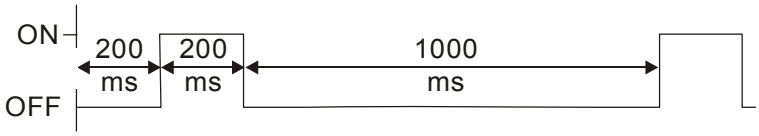	Stopped
ON		Operation

ERR LED:

LED status	Condition/ State
OFF	No Error
Single flash	One Message fail 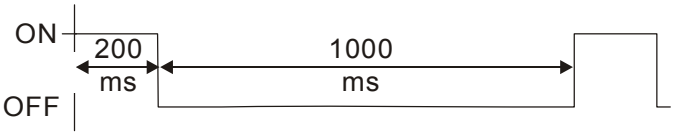
Double flash	Guarding fail or heartbeat fail 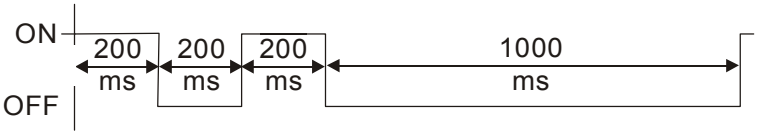
Triple flash	SYNC fail 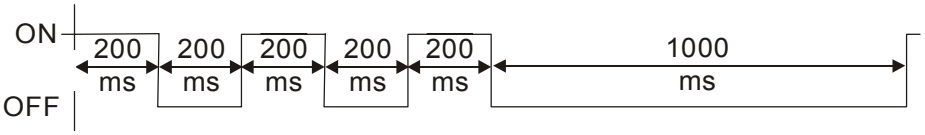
ON	Bus off

[The page intentionally left blank]

Chapter 16 PLC Function Applications

16-1 PLC Summary

16-2 Notes before PLC use

16-3 Turn on

- 16-3-1 Connect to PC
- 16-3-2 I/O device explanation
- 16-3-3 Installation WPLSoft
- 16-3-4 Program writing
- 16-3-5 Program download
- 16-3-6 Program monitoring

16-4 Basic principles of PLC ladder diagrams

- 16-4-1 Schematic diagram of PLC ladder diagram program scanning
- 16-4-2 Introduction to ladder diagrams
- 16-4-3 Overview of PLC ladder diagram editing
- 16-4-4 Commonly-used basic program design examples

16-5 Various PLC device functions

- 16-5-1 Introduction to device functions
- 16-5-2 Introduction to special relay functions (special M)
- 16-5-3 Introduction to special register functions (special D)
- 16-5-4 PLC Communication address

16-6 Introduction to the Command Window

- 16-6-1 Overview of basic commands
- 16-6-2 Detailed explanation of basic commands
- 16-6-3 Overview of application commands
- 16-6-4 Detailed explanation of applications commands
- 16-6-5 Detailed explanation of driver special applications commands

16-7 Error display and handling

16-8 CANopen Master control applications

16-9 Explanation of various PLC mode controls (speed, torque, homing, and position)

16-10 Internal communications main node control

16-11 Count function using MI8

- 16-11-1 High-speed count function
- 16-11-2 Frequency calculation function

16-12 Modbus remote IO control applications (use MODRW)

16-13 Calendar

16-1 PLC Summary

16-1-1 Introduction

The commands provided by the C2000's built-in PLC functions, including the ladder diagram editing tool WPLSoft, as well as the usage of basic commands and applications commands, chiefly retain the operating methods of Delta's PLC DVP series.

16-1-2 WPLSoft ladder diagram editing tool

WPLSoft is Delta's program editing software for the DVP and C2000 programmable controllers in the Windows operating system environment. Apart from general PLC program design general Windows editing functions (such as cut, paste, copy, multiple windows, etc.), WPLSoft also provides many Chinese/English annotation editing and other convenience functions (such as registry editing, settings, file reading, saving, and contact graphic monitoring and settings, etc.).

The following basic requirements that need to install WPLSoft editing software:

Item	System requirements
Operating system	Windows 95/98/2000/NT/ME/XP
CPU	At least Pentium 90
Memory	At least 16MB (we recommend at least 32MB)
Hard drive	Hard drive capacity: at least 100MB free space One optical drive (for use in installing this software)
Display	Resolution: 640×480, at least 16 colors; it is recommended that the screen area be set at 800×600 pixels
Mouse	Ordinary mouse or Windows-compatible device
Printer	Printer with a Windows driver program
RS-485 port	Must have at least an RS-485 port to link to the PLC
Suitable PLC models	Delta's full DVP-PLC series, VFD-C2000 series

16-2 Notes before PLC use

1. The PLC has a preset communications format of 7,N,2,9600, with node 2; the PLC node can be changed in parameter 09-35, but this address may not be the same as the converter's address setting of 09-00.
2. The C2000 provides 2 communications serial ports that can be used to download PLC programs (see figure below). Channel 1 has a fixed communications format of 19200,8,N,2 RTU.

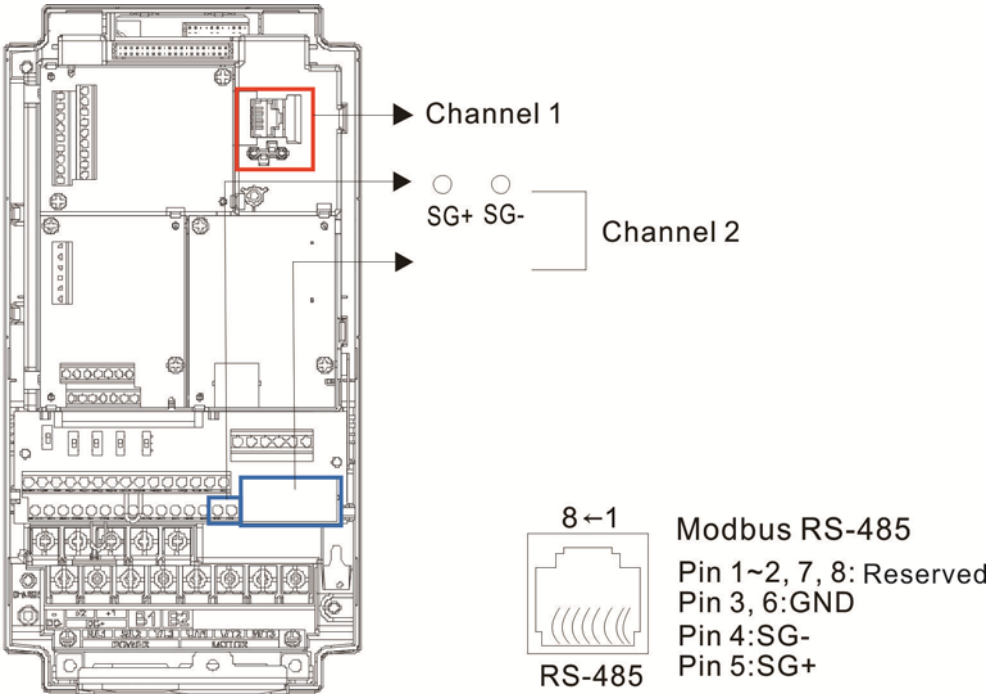

3. The client can simultaneously access data from the converter and internal PLC, which is performed through identification of the node. For instance, if the converter node is 1 and the internal PLC node is 2, then the client command will be
   01 (node) 03 (read) 0400 (address) 0001 (1 data item), indicating that it must read the data in converter parameter 04-00
   02 (node) 03 (read) 0400 (address) 0001 (1 data item), indicating that it must read the data in internal PLC X0
4. The PLC program will be disabled when uploading/downloading programs.
5. Please note when using WPR commands to write in parameters, values may be modified up to a maximum of 10^9 times, otherwise a memory write error will occur. The calculation of modifications is based on whether the entered value has been changed. If the entered value is left unchanged, the modifications will not increase afterwards. But if the entered value is different from before, the number of modifications will increase by one.
6. When parameter 00-04 is set as 28, the displayed value will be the value of PLC register D1043 (see figure below):

Digital Keypad KPC-CC01 Can display 0~65535	Digital Keypad KPC-CE01 0~9999

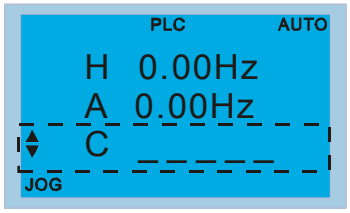	When more than 9999

7. In the PLC Run and PLC Stop mode, the content 9 and 10 of parameter 00-02 cannot be set and cannot be reset to the default value.
8. The PLC can be reset to the default value when parameter 00-02 is set as 6.
9. The corresponding MI function will be disabled when the PLC writes to input contact X.
10. When the PLC controls converter operation, control commands will be entirely controlled by the PLC and will not be affected by the setting of parameter 00-21.
11. When the PLC controls converter frequency commands (FREQ commands), frequency commands will be entirely controlled by the PLC, and will not be affected by the setting of parameter 00-20 or the Hand ON/OFF configuration.
12. When the PLC controls converter frequency (TORQ commands), torque commands will be entirely controlled by the PLC, and will not be affected by the setting of parameter 11-33 or the Hand ON/OFF configuration.
13. When the PLC controls converter frequency (POS commands), position commands will be entirely controlled by the PLC, and will not be affected by the setting of parameter 11-40 or the Hand ON/OFF configuration.
14. When the PLC controls converter operation, if the keypad Stop setting is valid, this will trigger an FStP error and cause stoppage.

16-3 Turn on

16-3-1 Connect to PC

Start operation of PLC functions in accordance with the following four steps

1. After pressing the Menu key and selecting 4: PLC on the KPC-CC01 digital keypad, press the Enter key (see figure below).

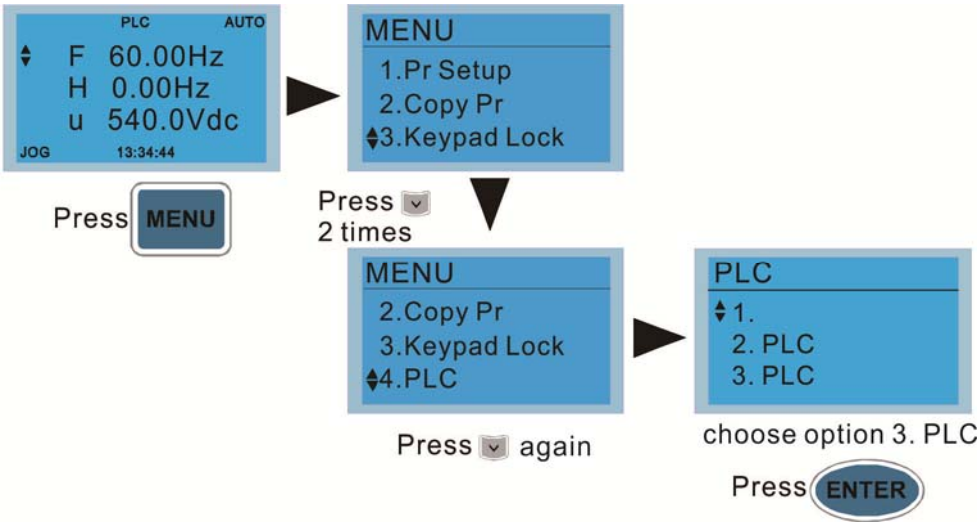

NOTE

If the optional KPC-CE01 digital keypad is used, employ the following method:

Switch to the main PLC2 screen: After powering up the drivers, press the MENU key on the KPC-CE01 once to switch to the function screen, which will then display "PrSET." After using the up or down button to switch to the "PLC" screen, and then press ENTER to enter PLC function settings. Afterwards, press the Up key to switch to "PLC2," and then press ENTER. The screen will now display "PLSn" and flash, indicating that the internal PLC currently has no program, and this error message can be ignored. If the PLC has an editing program, the screen will display "End," and will jump back to "PLC2" after 1 to 2 seconds. When no program has been downloaded to the drivers, the program can continue to run even if a PLC warning message appears.

2. Wiring: Connect the driver's RJ-45 communications interface to a PC via the RS485

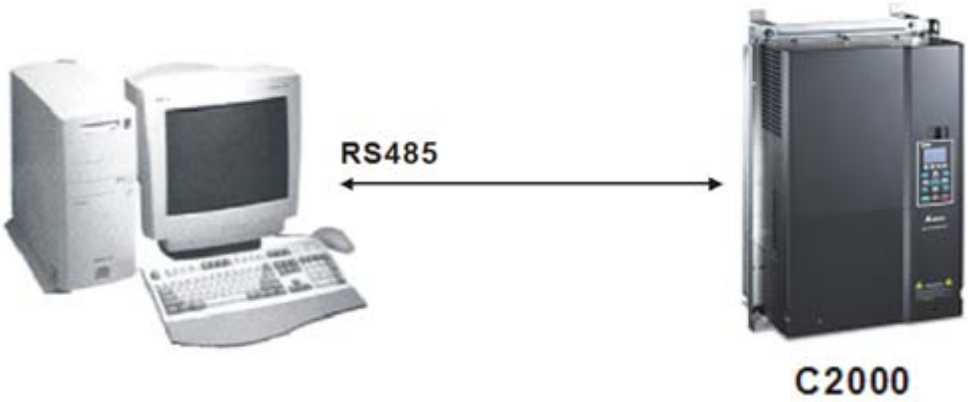

3. PLC function usage

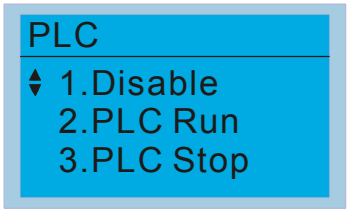

■ PLC functions are as shown in the figure on the left; select item 2 and implement PLC functions.

1: No function (Disable)

2: Enable PLC (PLC Run)

3: Stop PLC functions (PLC Stop)

Optional product: PLC function display method on KPC-CE01 digital keypad	PLC 0 : Do not implement PLC functions PLC 1 : Initiate PLC Run PLC 2 : Initiate PLC Stop

■ When the external multifunctional input terminals (MI1 to MI8) are in PLC Mode select bit0 (51) or PLC Mode select bit1 (52), and the terminal contact is closed or open, it will compulsorily switch to the PLC mode, and keypad switching will be ineffective. Corresponding actions are as follows:

PLC mode		PLC Mode select bit1(52)	PLC Mode select bit0 (51)
Using KPC-CC01	Using KPC-CE01		
Disable	PLC 0	OFF	OFF
PLC Run	PLC 1	OFF	ON
PLC Stop	PLC 2	ON	OFF
Maintain previous state	Maintain previous state	ON	ON

Use of KPC-CE01 digital keypad to implement PLC functions

☑ When the PLC screen switches to the PLC1 screen, this will trigger one PLC action, and the PLC program start/stop can be controlled by communications via the WPL.

☑ When the PLC screen switches to the PLC2 screen, this will trigger one PLC stop, and the PLC program start/stop can be controlled by communications via the WPL.

☑ The external terminal control method is the same as shown in the table above.

NOTE

■ When input/output terminals (FWD REV MI1 to MI8 MI10 to 15, Relay1, Relay2 RY10 to RY15, MO1 to MO2 MO10 to MO11,) are included in the PLC program, these input/output terminals will only be used by the PLC. As an example, when the PLC program controls Y0 during PLC operation (PLC1 or PLC2), the corresponding output terminal relay(RA/RB/RC) will operate in accordance with the program. At this time, the multifunctional input/output terminal setting will be ineffective. Because these terminal functions are already being used by the PLC, the DI DO AO in use by the PLC can be determined by looking at parameter 02-52, 02-53, and 03-30.

■ When the PLC's procedures use special register D1040, the corresponding AO contact AFM1 will be occupied, and AFM2 corresponding to special register D1045 will have the same situation.

■ Parameter 03-30 monitors the state of action of the PLC function analog output terminal; Bit0 corresponds to the AFM1 action state, and Bit1 corresponds to the AFM2 action state.

16-3-2 I/O device explanation

Input devices:

Serial No.	X0	X1	X2	X3	X4	X5	X6	X7	X10	X11	X12	X13	X14	X15	X16	X17
1	FWD	REV	MI1	MI2	MI3	MI4	MI5	MI6	MI7	MI8						
2											MI10	MI11	MI12	MI13	MI14	MI15
3											MI10	MI11	MI12	MI13		

1: Control I/O |

2: Expansion card EMC-D611A (D1022=4)

3: Expansion card EMC-D42A (D1022=5)

Output devices:

Serial No.	Y0	Y1	Y2	Y3	Y4	Y5	Y6	Y7	Y10	Y11	Y12	Y13	Y14	Y15	Y16	Y17
1	RY1	RY2		MO1	MO2											
2						MO10	MO11									
3						RY10	RY11	RY12	RY13	RY14	RY15					

1: Control I/O |

2: Expansion card EMC-D42A (D1022=5)

3: Expansion card EMC-R6AA (D1022=6)

16-3-3 Installation WPLSoft

See Delta's website for WPLSoft editing software:
http://www.delta.com.tw/industrialautomation/download.

16-3-4 Program writing

After completing installation, the WPLSoft program will be installed in the designated subfolder "C:\Program Files\Delta Industrial Automation\WPLSoft x.xx." The editing software can now be run by clicking on the WPL icon using the mouse.

The WPL editing window will appear after 3 seconds (see figure below). When running WPLSoft for the first time, before "New file" has been used, only the "File (F)," "Communications (C)," View (V)," "Options (O)," and "Help (H)" columns will appear on the function toolbar.

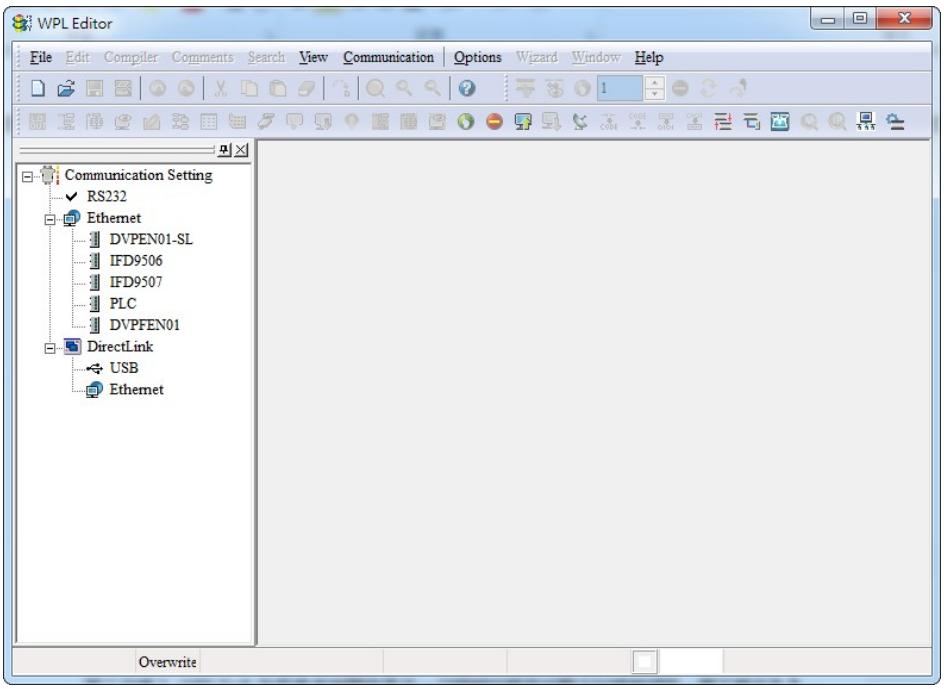

After running WPLSoft for the second time, the last file edited will open and be displayed in the editing window. The following figure provides an explanation of the WPLSoft editing software window:

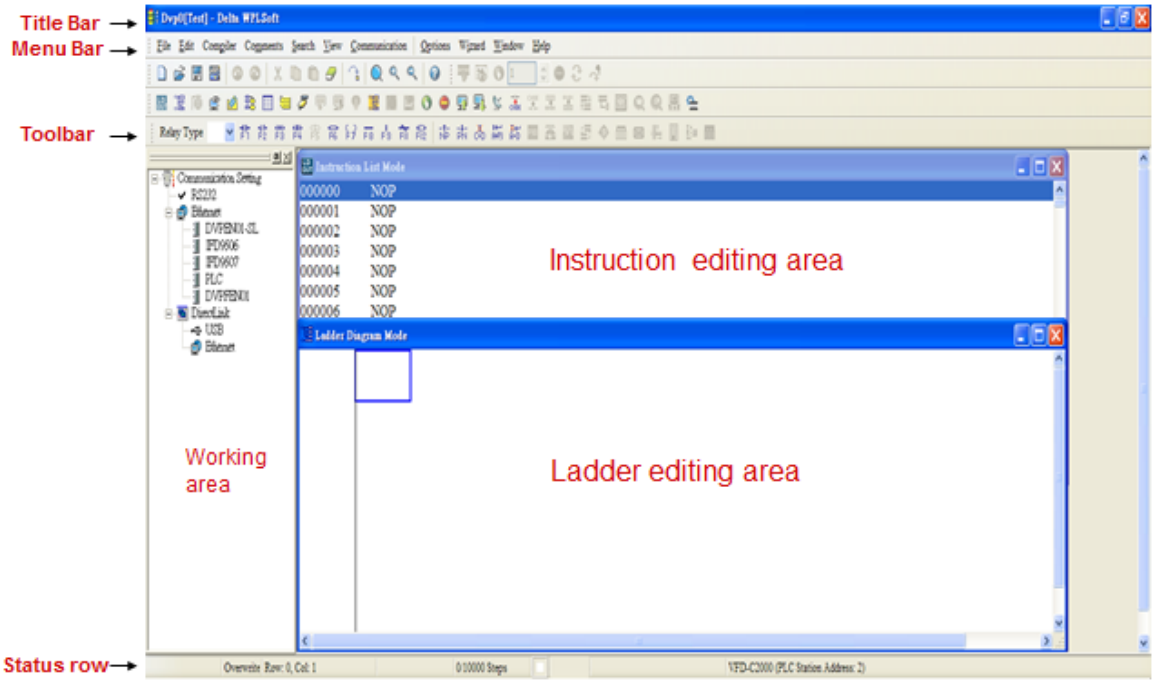

Click on the icon on the toolbar in the upper left part of the screen: opens new file (Ctrl+N)

You can also use "File (F)"=> New file (N) (Ctrl+N)

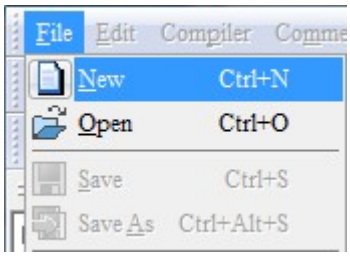

The "Device settings" window will appear after clicking. You can now enter the project title and filename, and select the device and communication settings to be used

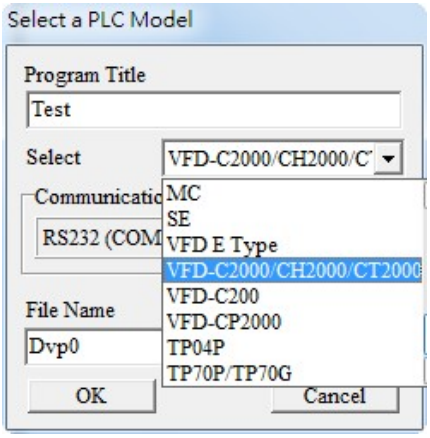

Communications settings: Perform settings in accordance with the desired communications method

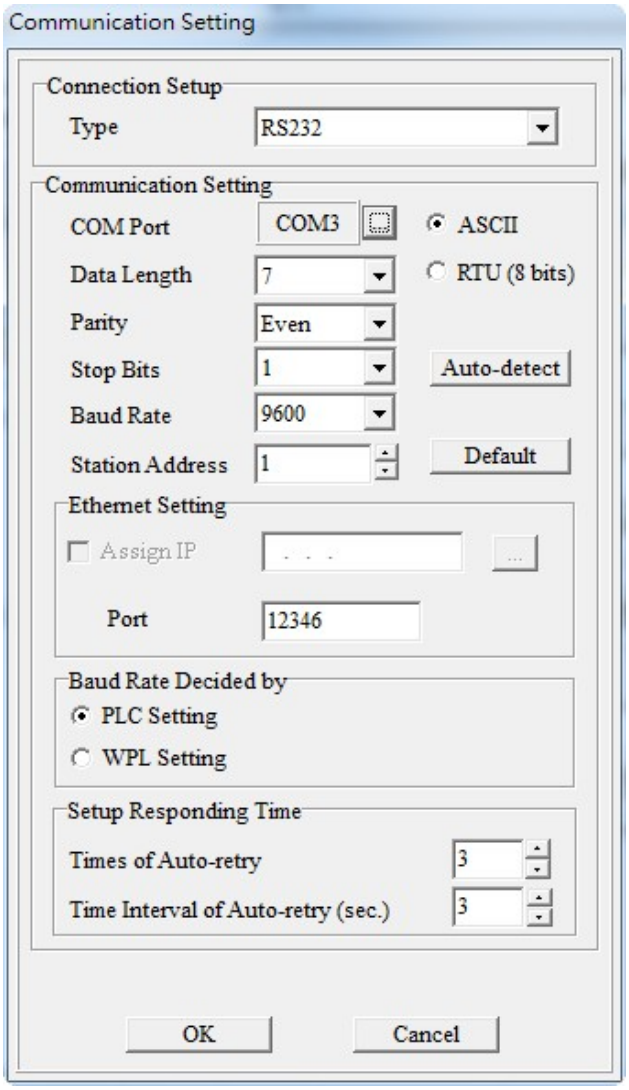

Press Confirm after completing settings and begin program editing. There are two program editing methods; you can choose whether to perform editing in the command mode or the ladder diagram mode.

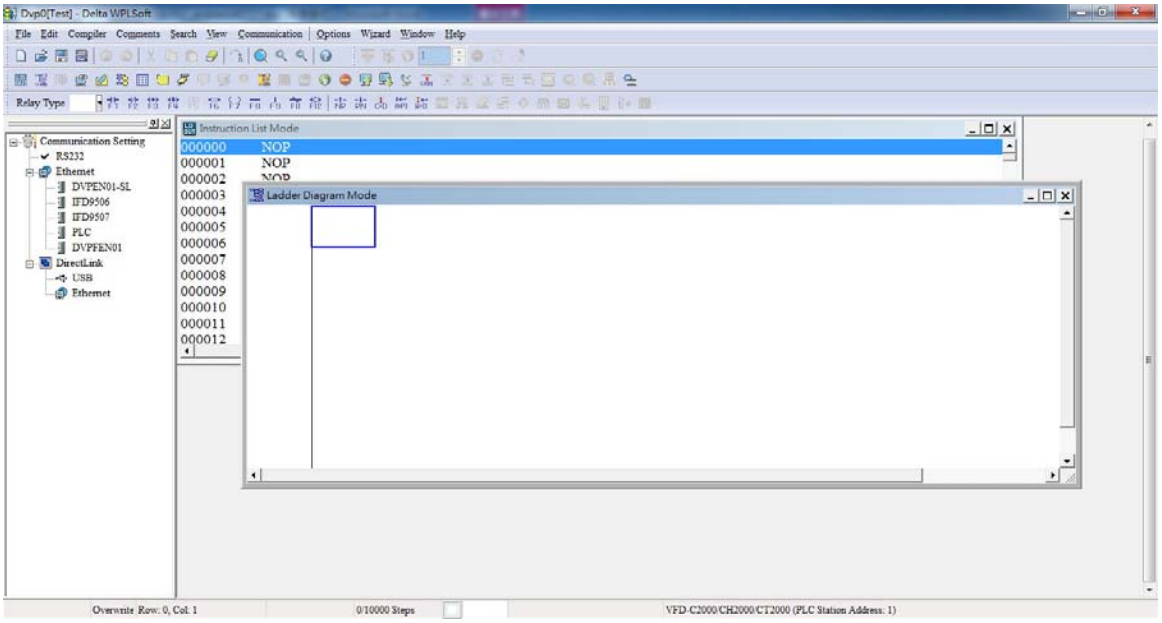

In ladder diagram mode, you can perform program editing using the buttons on the function icon row

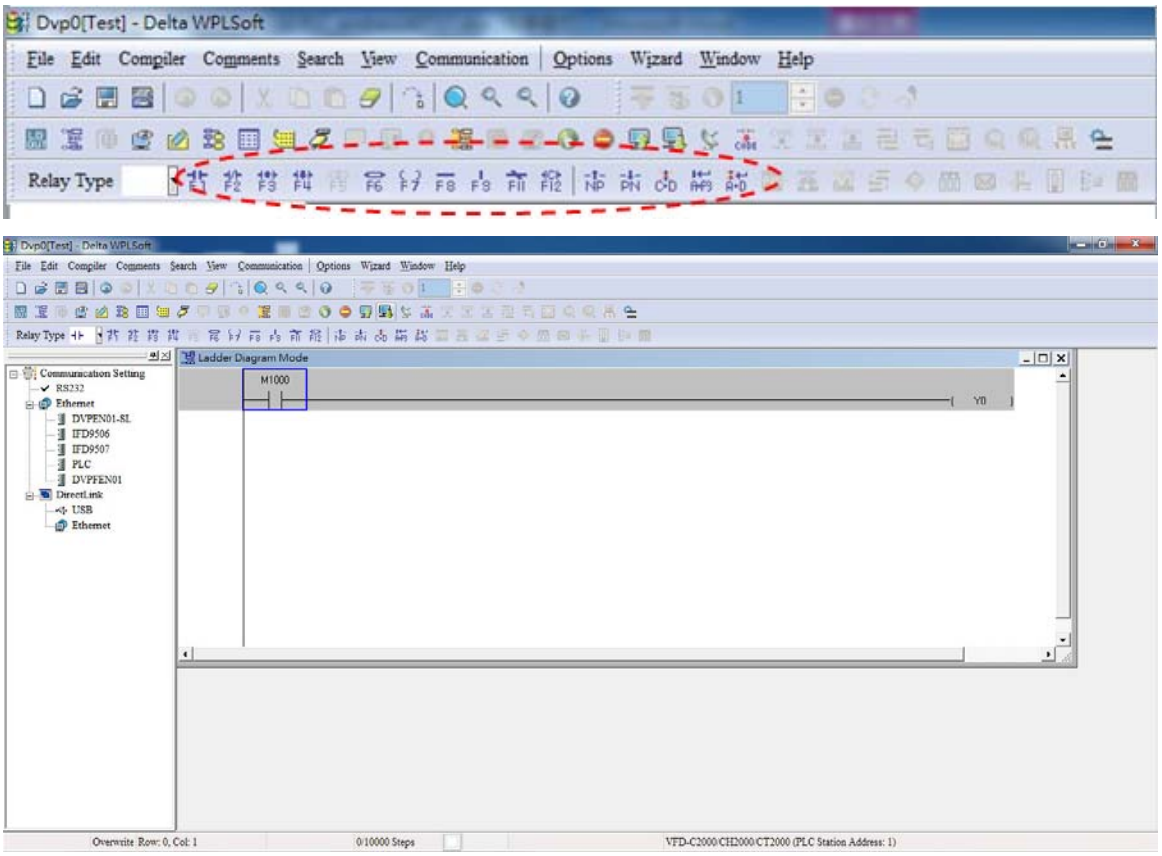

Basic Operation

Example: Input the ladder diagram in the following figure

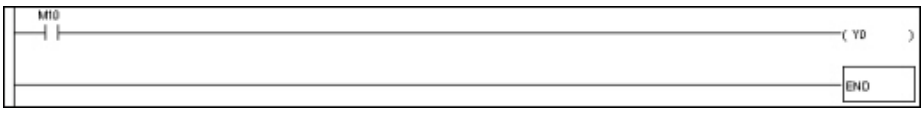

Mouse operation and keyboard function key (F1 to F12) operation

1. The following screen will appear after a new file has been established:

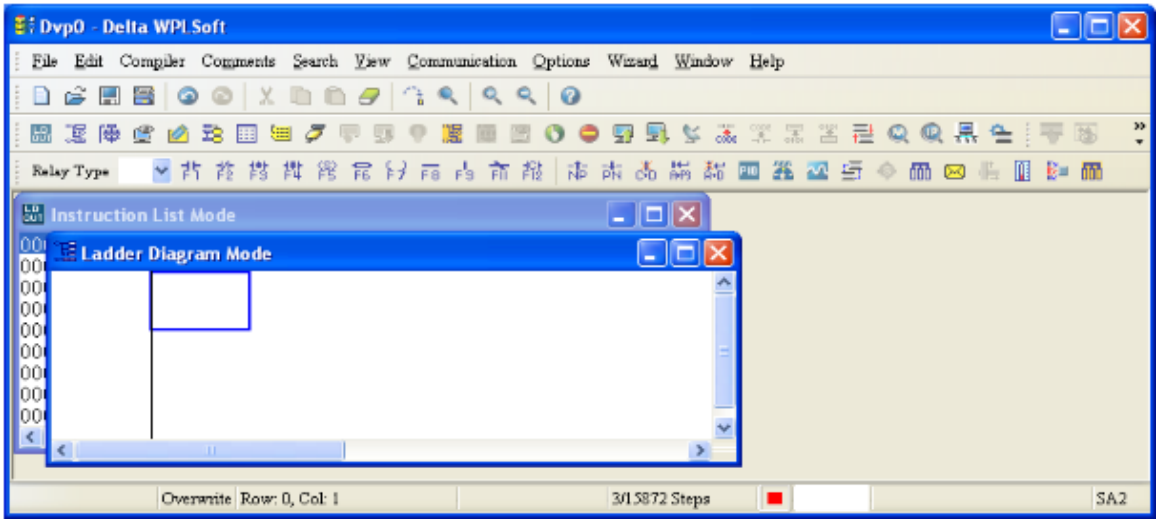

2. Use the mouse to click on the always-open switch icon or press the function key F1:

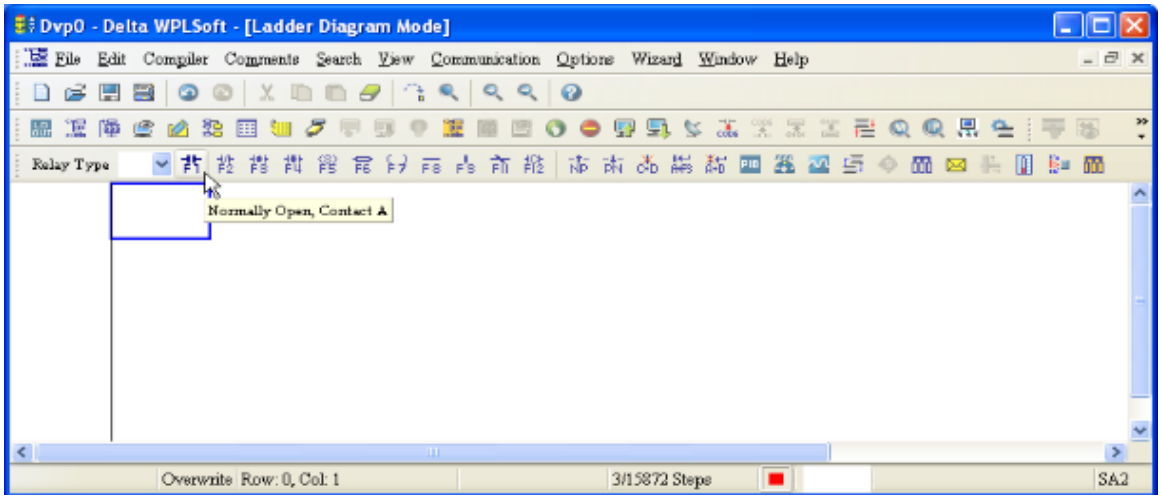

3. After the name of the input device and the comment dialog box have appeared, the device name (such as "M"), device number (such as "10"), and input comments (such as "auxiliary contact") can be selected; press the Confirm button when finished.

4. Click on the output coil icon or press function key F7. After the name of the input device and the comment dialog box have appeared, the device name (such as "Y"), device number (such as "0"), and input comments (such as "output coil") can be selected; press the Confirm button when finished.

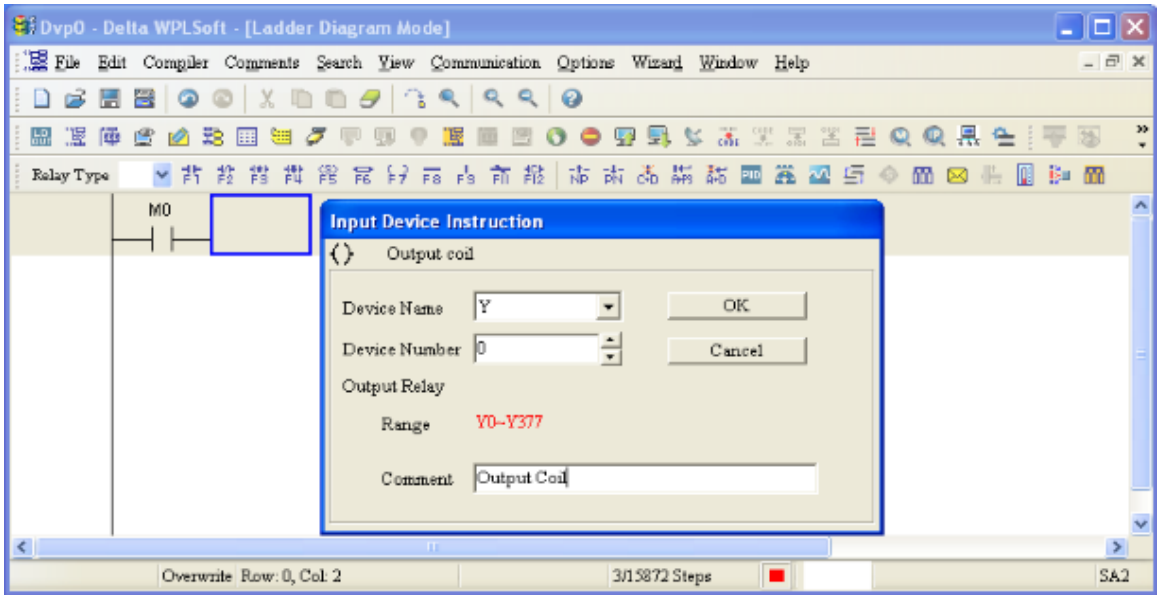

5. Click on application command icon or press function key F6. Click on "All application commands" in the function classification field, and click on the End command in the application command pull-down menu, or use the keyboard to key in "End" in that field, and press the confirm button.

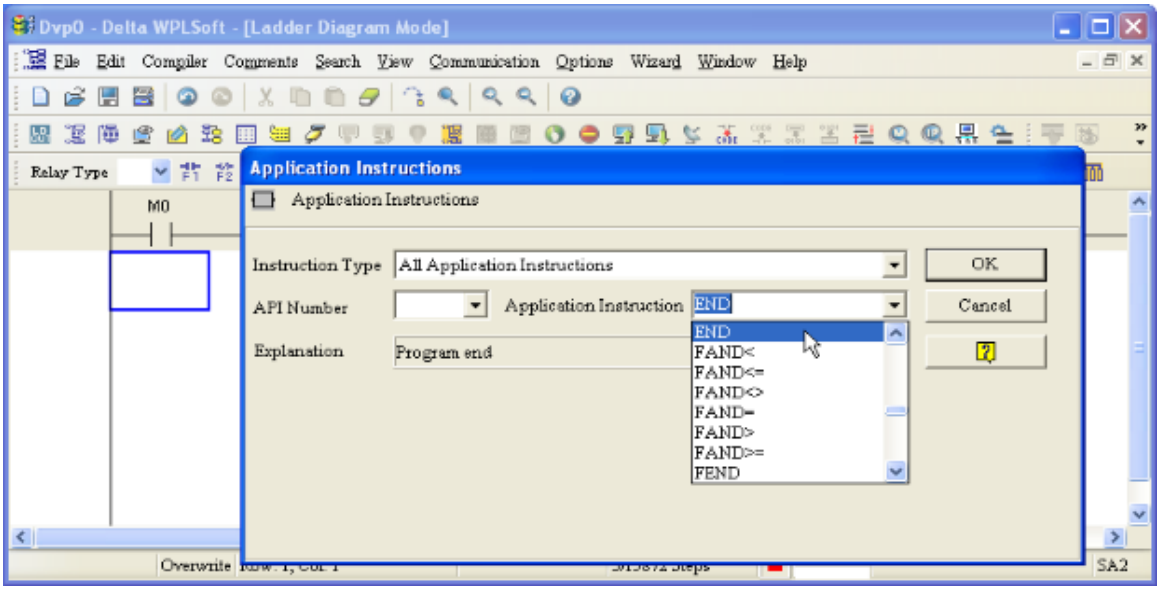

6. Click on the icon, which will compile the edited ladder diagram as a command program. After compiling, the number of steps will appear on the left side of the busbar.

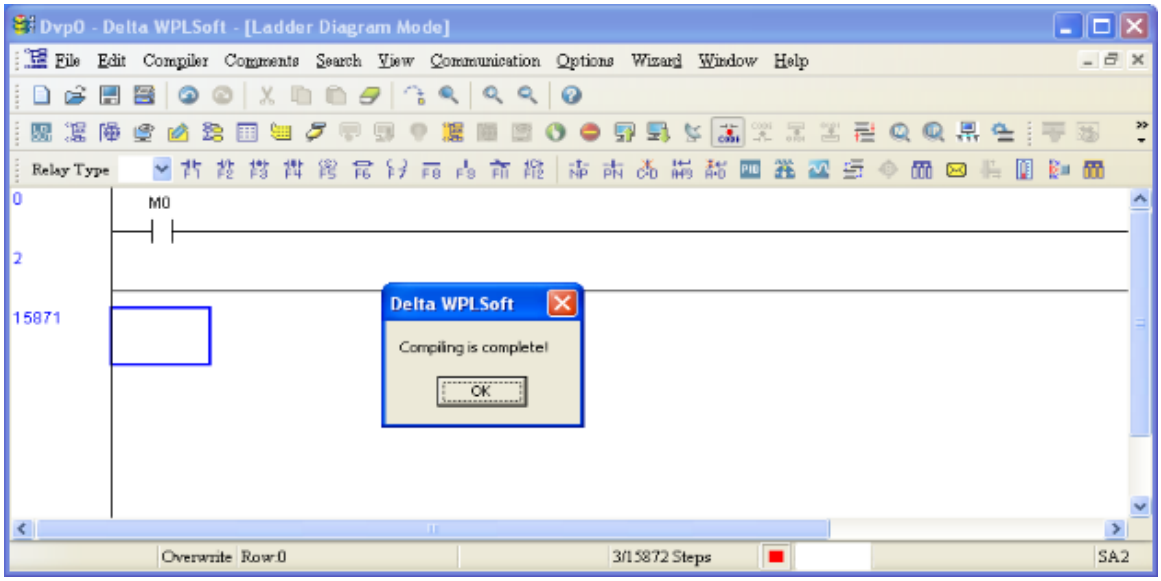

16-3-5 Program download

After inputting a program using WPLSoft, select compile . After completing compilation, select the to download a program. WPLSoft will perform program download with the online PLC in the communications format specified in communications settings.

16-3-6 Program monitoring

While confirming that the PLC is in the Run mode, after downloading a program, click on in the communications menu and select start ladder diagram control (see figure below)

16-4 Basic principles of PLC ladder diagrams

16-4-1 Schematic diagram of PLC ladder diagram program scanning

Output results are calculated on the basis of the ladder diagram configuration (internal devices will have real-time output before results are sent to an external output point)

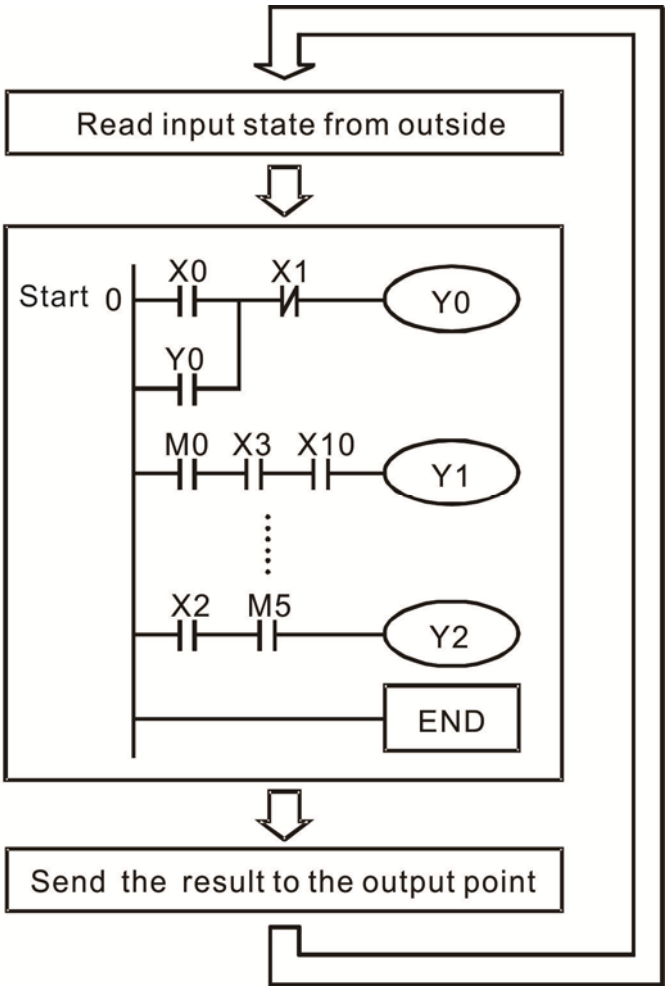

Repeated implementation

16-4-2 Introduction to ladder diagrams

Ladder diagrams comprise a graphic language widely applied in automatic control, and employs common electrical control circuit symbols. After a ladder diagram editor has been used to create a ladder pattern, PLC program designed is completed. The use of a graphic format to control processes is very intuitive, and is readily accepted by personnel who are familiar with electrical control circuit technology. Many of the basic symbols and actions in a ladder diagram comprise commonly-seen electrical devices in conventional automatic control power distribution panels, such as buttons, switches, relays, timers, and counters.

Internal PLC devices: The types and quantities of internal PLC devices vary in different brands of products. Although these internal devices use the same names as conventional electrical control circuit elements such as relays, coils, and contacts, a PLC does not actually contain these physical devices, and they instead correspond to basic elements in the PLC's internal memory (bits). For instance, if a bit is 1, this may indicate that a coil is electrified, and if that bit is 0, it will indicate that the coil is not electrified. An NO contact (Normal Open, or contact a) can be used to directly read the value of the corresponding bit, and an NC contact (Normal Close, or contact b) can be used to obtain the inverse of the bit's value. Multiple relays occupy multiple bits, and 8 bits comprise one byte; two

bytes comprise one word, and two words comprise a double word. When multiple relays are processing at the same time (such as addition/subtraction or displacement, etc.), a byte, word, or double word can be used. Furthermore, a PLC contains two types of internal devices: a timer and a counter. It not only has a coil, but can count time and numerical values. Because of this, when it is necessary to process some numerical values, these values are usually in the form of bytes, words, or double words.

The various internal devices in a PLC all account for a certain quantity of storage units in the PLC's storage area. When these devices are used, the content of the corresponding storage area is red in the form of bits, bytes, or words.

Introduction to the basic internal devices in a PLC

Device type	Description of Function
Input Relay	An input relay constitutes the basic unit of storage in a PLC's internal memory corresponding to an external input point (which serves as a terminal connecting with an external input switch and receiving external input signals). It is driven by external input signals, to which it assigns values of 0 or 1. A program design method cannot change the input relay status, and therefore cannot rewrite the corresponding basic units of an input relay, and WPLSoft cannot be used to perform compulsory On/Off actions. A relay's contacts (contacts a and b) can be used an unlimited number of times. An input relay with no input signal must be left idle and cannot be used for some other purpose. ☑ Device indicated as: X0, X1, X7, X10, X11, etc. This device is expressed with the symbol "X," and a device's order is indicated with an octal number. Input point numbers are indicated in the main computer and in expansion devices.
Output Relay	An output relay constitutes the basic unit of storage in a PLC's internal memory corresponding to an external output point (which connects with an external load). It may be driven by an input relay contact, a contact on another internal device, or its own contacts. It uses one NO contact to connect with external loads or other contacts, and, like input contacts, can use the contact an unlimited number of times. An output relay with no input signal will be idle, but may be used an internal relay if needed. Device indicated as: Y0, Y1, Y7, Y10, Y11, etc. This device is expressed with the symbol "Y," and a device's order is indicated with an octal number. Output point numbers are indicated in the main computer and in expansion devices.
Internal Relay	Internal relays have no direct connection with the outside. These relays are auxiliary relays inside a PLC. Their function is the same as that of an auxiliary (central) relay in an electrical control circuit: Each auxiliary relay corresponding to a basic unit of internal storage; they can be driven by input relay contacts, output relay contacts, and the contacts of other internal devices. An internal auxiliary relay's contact can also be used an unlimited number of times. Internal relays have no outputs to outside, and must output via an output point. ☑ Device indicated as: M0, M1 to M799, etc. This device is expressed as the symbol "M," expressed, and its order is expressed as a decimal number.
Counter	A counter is used to perform counting operations. A count setting value (such as the number of pulses to be counted) must be assigned when a counter is used. A counter contains a coil, contact, and a counting storage device. When the coil goes from Off →to On, this indicates that the counter has an input pulse, and one is added to its count. There are 16 bits that can be employed by the user. ☑ Device indicated as: C0, C1 to C79, etc. This device is expressed as the symbol "C," expressed, and its order is expressed as a decimal number.

Device type	Description of Function
Timer	A timer is used to complete control of timing. The timer contains a coil, contact, and a time value register. When the coil is electrified, if the preset time is reached, the contact will be actuated (contact a will close, contact b will open), and the timer's fixed value be given by the set value. Timer has a regulated clock cycle (timing units: 100 ms). As soon as power to the coil is cut off, the contact will no longer be actuated (contact a will open, contact b will close), and the original timing value will return to zero. ☑ Device indicated as: T0, T1 to T159, etc. The device is expressed as the symbol "T," and its order is expressed as a decimal number.
Data register	When a PLC is used to perform various types of sequence control and set time value and count value control, it most commonly perform data processing and numerical operations, and data registers are used exclusively for storage of data and various parameters. Each data register contains 16 bits of binary data, which means that it can store one word. Two data registers with adjacent numbers can be used to process double words. ☑ Device indicated as: D0, D1 to D399, etc. The device is expressed as the symbol "D," and its order is expressed as a decimal number.

Ladder diagram images and their explanation

Ladder diagram structures	Explanation of commands	Command	Using Device
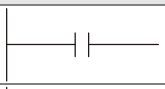	NO switch, contact a	LD	X、Y、M、T、C
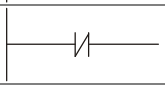	NC switch, contact b	LDI	X、Y、M、T、C
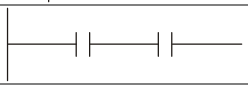	Series NO	AND	X、Y、M、T、C
	Series NC	ANI	X、Y、M、T、C
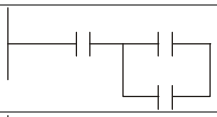	Parallel NO	OR	X、Y、M、T、C
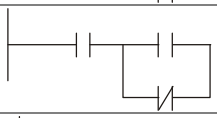	Parallel NC	ORI	X、Y、M、T、C
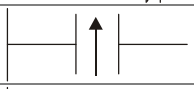	Positive edge-triggered switch	LDP	X、Y、M、T、C
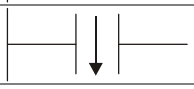	Negative edge-triggered switch	LDF	X、Y、M、T、C
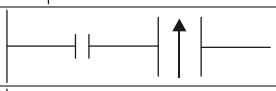	Positive edge-triggered series	ANDP	X、Y、M、T、C
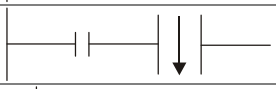	Negative edge-triggered series	ANDF	X、Y、M、T、C
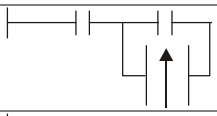	Positive edge-triggered parallel	ORP	X、Y、M、T、C
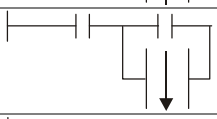	Negative edge-triggered parallel	ORF	X、Y、M、T、C
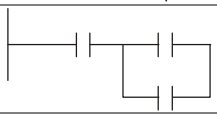	Block series	ANB	N/A

Ladder diagram structures	Explanation of commands	Command	Using Device
	Block parallel	ORB	N/A
	Multiple outputs	MPS MRD MPP	N/A
	Coil driven output commands	OUT	Y、M
	Some basic commands, applications commands	Some basic commands Applications commands	
	Inverted logic	INV	N/A

16-4-3 Overview of PLC ladder diagram editing

The program editing method begins from the left busbar and proceeds to the right busbar (the right busbar is omitted when editing using WPLSoft). Continue to the next row after completing each row; there is a maximum of 11 contacts on each row. If this is not sufficient, a continuous line will be will be generated to indicate the continued connection and more devices can be added. A continuous series of numbers will be generated automatically and identical input points can be used repeatedly. See figure below:

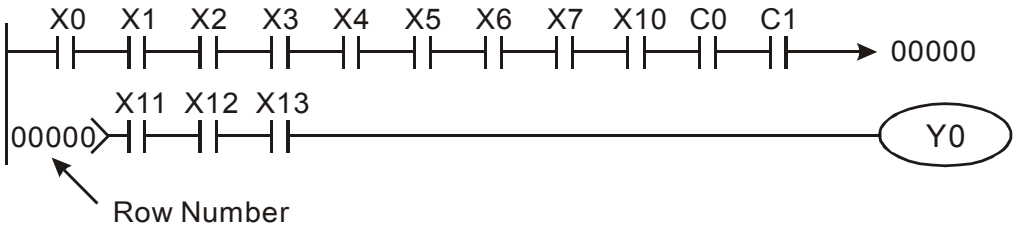

The ladder diagram programming method involves scanning from the upper left corner to the lower right corner. The coils and applications command computing box are handled in the output, and the ladder diagram is placed on the farthest right. Taking the figure below as an example, we can gradually analyze the procedural sequence of the ladder diagram. The number in the upper right corner gives the sequential order.

	Explanation of command sequence	
1	LD	X0
2	OR	M0
3	AND	X1
4	LD	X3
	AND	M1
	ORB	
5	LD	Y1
	AND	X4

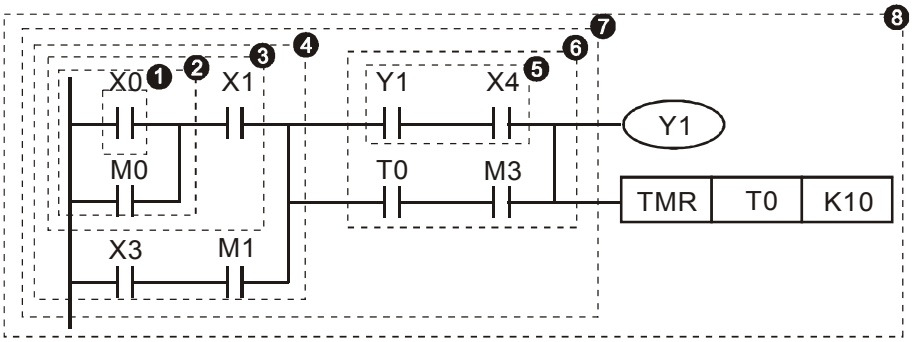

```
6    LD    T0
     AND   M3
     ORB
7    ANB
8    OUT   Y1
     TMR   T0    K10
```

Explanation of basic structure of ladder diagrams

LD (LDI) command: An LD or LDI command is given at the start of a block.

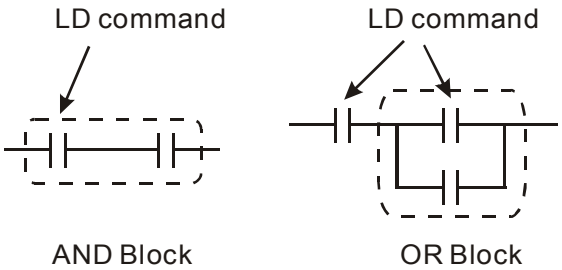

LDP and LDF have this command structure, but there are differences in their action state. LDP, LDF only act at the rising or falling edge of a conducting contact. (see figure below):

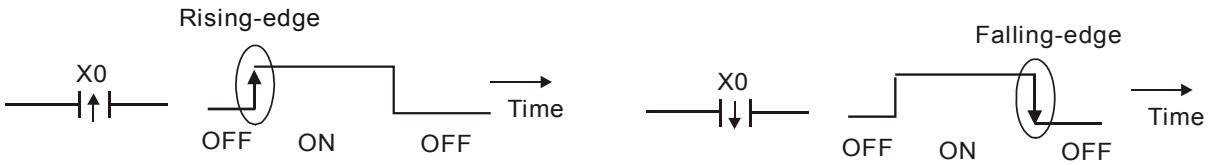

AND (ANI) command: A series configuration in which a single device is connected with one device or a block.

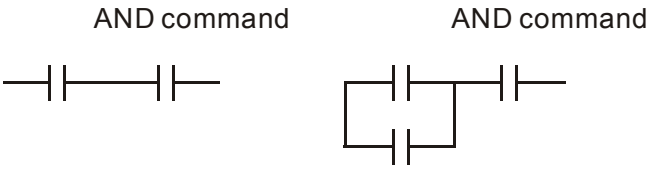

ANDP, ANDF also have structures like this, but their action occurs at the rising and falling edge.

OR (ORI) command: A single device is connected with one device or a block.

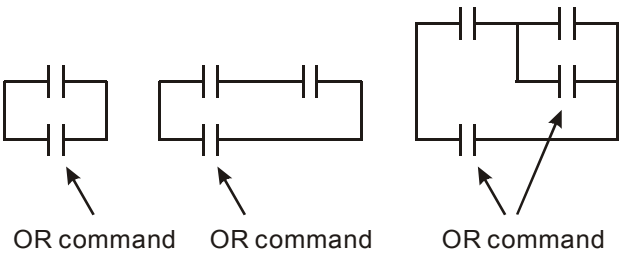

ORP, ORF also have identical structures, but their action occurs at the rising and falling edge.

ANB command: A configuration in which one block is in series with one device or block.

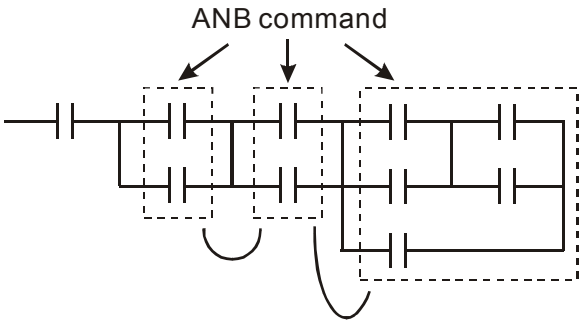

ORB command: A configuration in which one block is in parallel with one device or block.

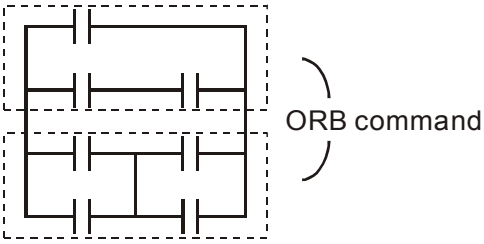

In the case of ANB and ORB operations, if a number of blocks are connected, they should be combined to form a block or network from the top down or from left to right.

MPS, MRD, MPP commands: Branching point memory for multiple outputs, enabling multiple, different outputs. The MPS command begins at a branching point, where the so-called branching point refers to the intersection of horizontal and vertical lines. We have to rely on the contact status along a single vertical line to determine whether the next contact can give a memory command. While each contact is basically able to give memory commands, in view of convenience and the PLC's capacity restrictions, this can be omitted from some places when converting a ladder diagram. The structure of the ladder diagram can be used to judge what kinds of contact memory commands are used.

MPS can be distinguished by use of the "┬" symbol; this command can be used consecutively for up to 8 times. The MRD command is read from branching point memory; because logic states along any one vertical line must be the same, in order to continue analysis of other ladder diagrams, the original contact status must be read.

MRD can be distinguished by use of the "├" symbol. The MPP command is read from the starting state of the uppermost branching point, and it is read from the stack (pop); because it is the final command along a vertical line, it indicates that the state of the vertical line can be concluded.

MPP can be distinguished by use of the "└" symbol. Although there should basically be no errors when using the foregoing analytical approach, the compiling program may sometimes omit identical state output, as shown in the following figure:

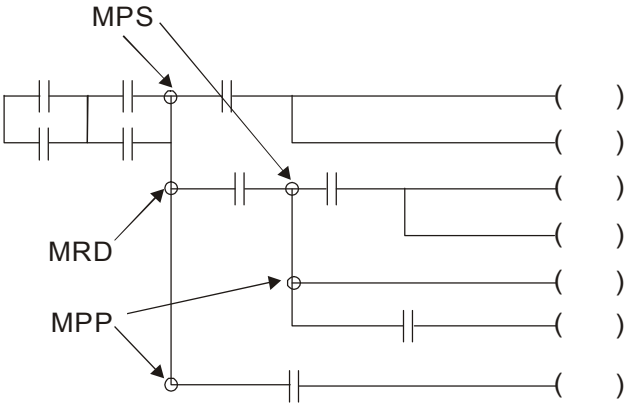

16-4-4 Commonly-used basic program design examples

Start, stop, and protection

Some applications may require a brief close or brief break using the buttons to start and stop equipment. A protective circuit must therefore be designed to maintain continued operation in these situations; this protective circuit may employ one of the following methods:

Example 1: Priority stop protective circuit

When the start NO contact X1=On, and the stop NC contact X2＝Off, Y1=On; if X2=On at this time, coil Y1 will no longer be electrified, and this is therefore referred to as priority stop.

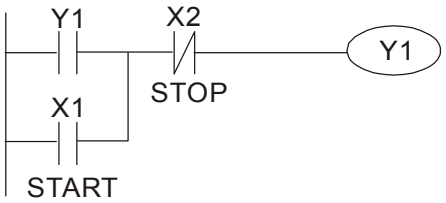

Example 2: Priority start protective circuit

When start NO contact X1=On, and the stop NC contact X2＝Off, Y1=On, and coil Y1 will be electrified and protected. At this time, if X2=On, coil Y1 will still protect the contact and continue to be electrified, and this is therefore priority start.

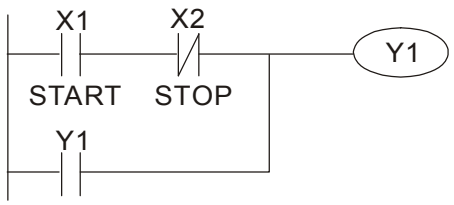

Example 3: Setting (SET) and reset (RST) command protective circuit

The following figure shows a protective circuit composed of RST and SET commands.

Priority stop occurs when the RST command is placed after the SET command. Because the PLC executes programs from the top down, at the end of the program, the state of Y1 will indicate whether coil Y1 is electrified. When X1 and X2 are both actuated, Y1 will lose power, and this is therefore priority stop.

Priority start occurs when the SET command is placed after the RST command. When X1 and X2 are both actuated, Y1 will be electrified, and this is therefore priority start.

Top priority of stop

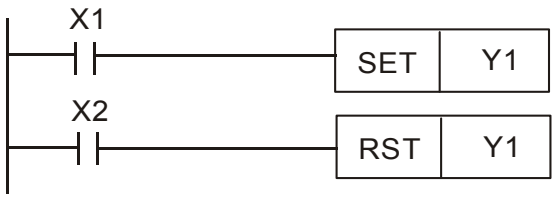

Top priority of start

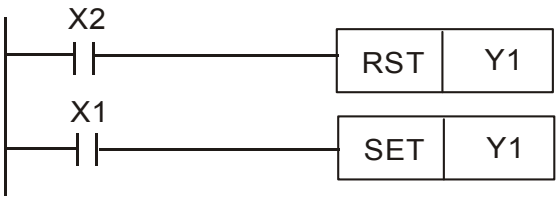

Commonly-used control circuits

Example 4: Conditional control

X1, X3 are respectively start/stop Y1, and X2, X4 are respectively start/stop Y2; all have protective circuits. Because Y1's NO contact is in series with Y2's circuit, it becomes an AND condition for the actuation of Y2. The action of Y1 is therefore a condition for the action of Y2, and Y1 must be actuated before Y2 can be actuated.

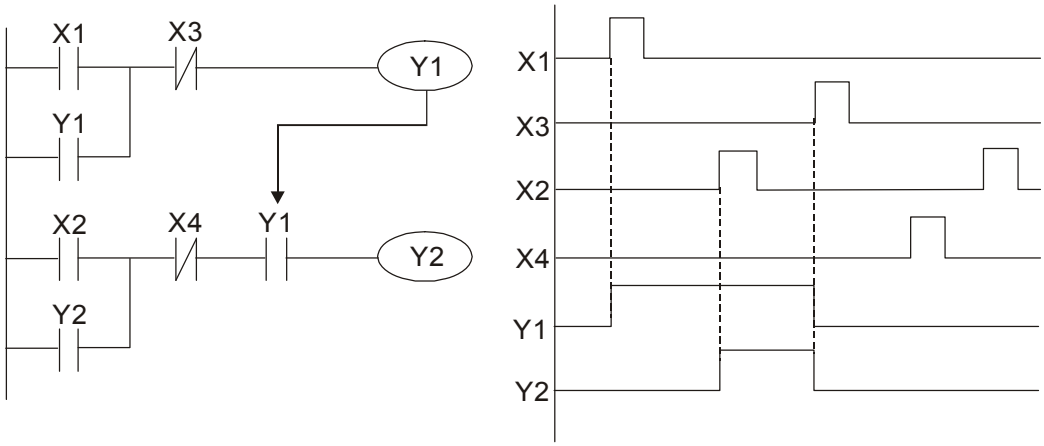

Example 5: Interlocking control

The figure below shows an interlocking control circuit. Depending on which of the start contacts X1, X2 is valid first, the corresponding output Y1 or Y2 will be actuated, and when one is actuated, the other will not be actuated. This implies that Y1 and Y2 cannot be actuated at the same time (interlocking effect). Even if both X1 and X2 are valid at the same time, because the ladder diagram program is scanned from the top down, it is impossible for Y1 and Y2 to be actuated at same time. This ladder diagram assigns priority only to Y1.

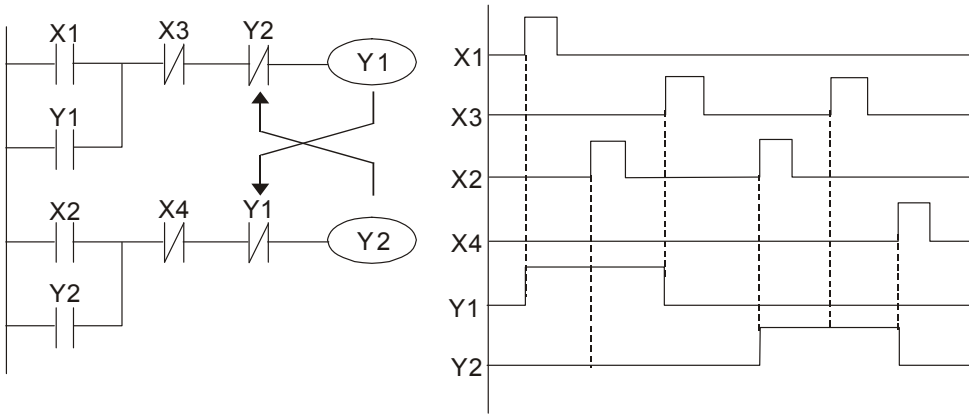

Example 6: Sequence control

If the NC contact of Y2 in the interlocking control configuration of example 5 is put in series with the Y1 circuit, so that it is an AND condition for actuation of Y1 (see figure below), not only is Y1 a condition for the actuation of Y2 in this circuit, the actuation of Y2 will also stop the actuation of Y1. This configuration confirms the actuation order of Y1 and Y2.

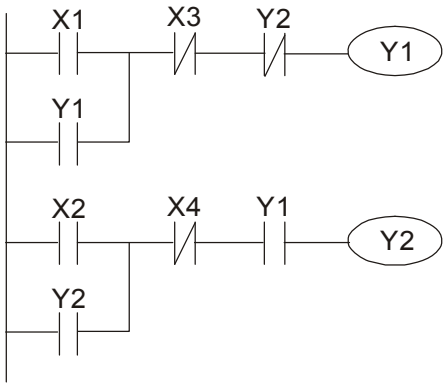

Example 7: Oscillating circuit

Oscillating circuit with a period of ΔT+ΔT

The figure below shows a very simple ladder diagram. When starting to scan the Y1 NC contact, because the Y1 coil has lost power, the Y1 NC contact will be closed. When the Y1 coil is then scanned, it will be electrified, and the output will be 1. When the Y1 NC contact is scanned in the scanning cycle, because Y1 coil is electrified, the Y1 NC contact will be open, the Y1 coil will then lose power, and the output will be 0. Following repeated scanning, the output of Y1 coil will have an oscillating waveform with a period of ΔT(On)+ΔT(Off).

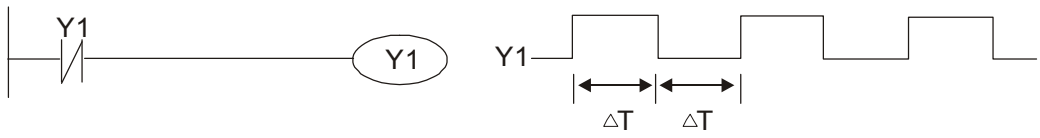

Oscillating circuit with a period of nT+ΔT

The program of the ladder diagram shown below uses timer T0 to control coil Y1's electrified time. After Y1 is electrified, it causes timer T0 to close during the next scanning cycle, which will cause the output from Y1 to have the oscillating waveform shown in the figure below. Here n is the timer's decimal setting value, and T is the clock cycle of the timer.

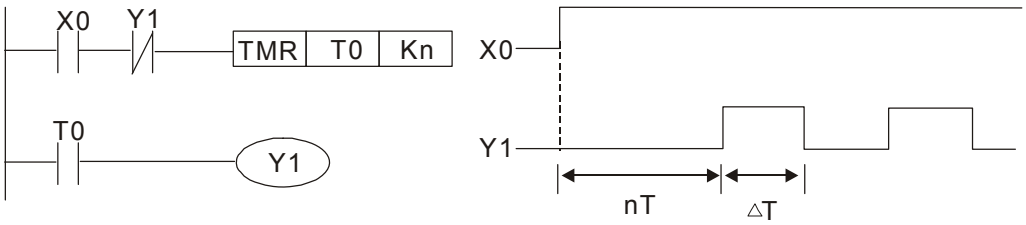

Example 8: Flashing circuit

The following figure shows an oscillating circuit of a type commonly used to cause an indicator light to flash or a buzzers to buzz. It uses two timers to control the On and Off time of Y1 coil. Here n1, n2 are the timing set values of T1 and T2, and T is the clock cycle of the timer.

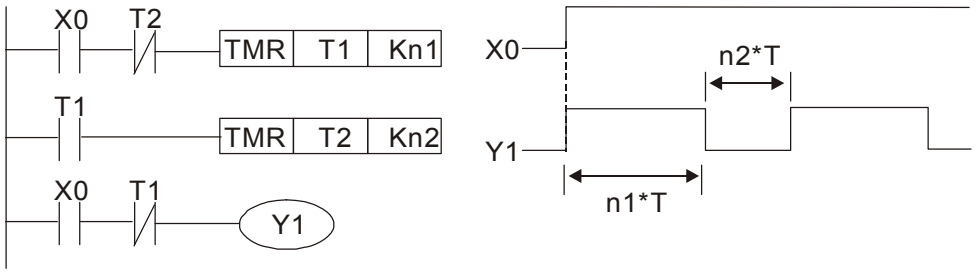

Example 9: Triggering circuit

In the figure below, a command consisting of the differential of the rising edge of X0 causes coil M0 to generate a single pulse for ΔT (length of one scanning cycle), and coil Y1 is electrified during this scanning cycle. Coil M0 loses power during the next scanning cycle, and NC contact M0 and NC contact Y1 are both closed. This causes coil Y1 to stay in an electrified state until there is another rising edge in input X0, which again causes the electrification of coil M0 and the start of another scanning cycle, while also causing coil Y1 to

lose power, etc. The sequence of these actions can be seen in the figure below. This type of circuit is commonly used to enable one input to perform two actions in alternation. It can be seen from the time sequence in the figure below that when input X0 is a square wave signal with a period of T, the output of coil Y1 will be a square wave signal with a period of 2T.

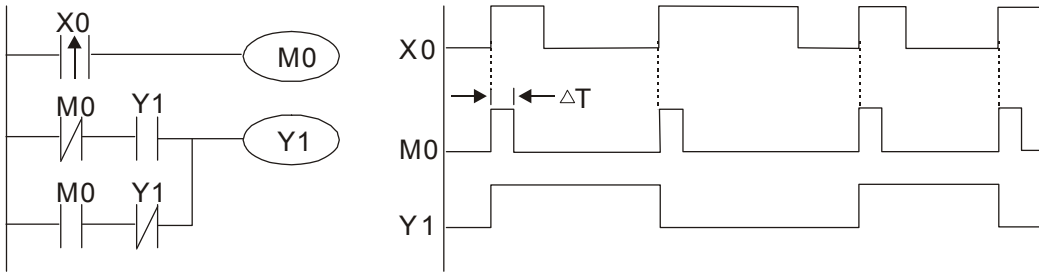

Example 10: Delay circuit

When input X0 is On, because the corresponding NC contact will be Off, the timer T10 will be in no power status, and output coil Y1 will be electrified. T10 will receive power and begin timing only after input X0 is Off, and output coil Y1 will be delayed for 100 sec. (K1000*0.1 sec. =100 sec.) before losing power; please refer to the sequence of actions in the figure below.

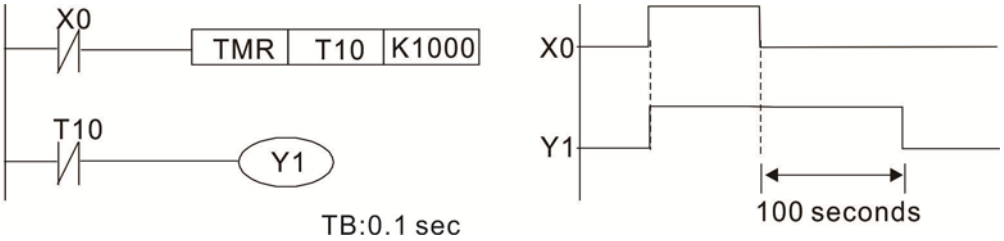

Example 11: The open/close delay circuit is composed of two timers; output Y4 will have a delay whether input X0 is On or Off.

Example 12: Extended timing circuit

In the circuit in the figure on the left, the total delay time from the moment input X0 closes to the time output Y1 is electrified is (n1+n2)*T, where T is the clock cycle. Timers: T11, T12; clock cycle: T.

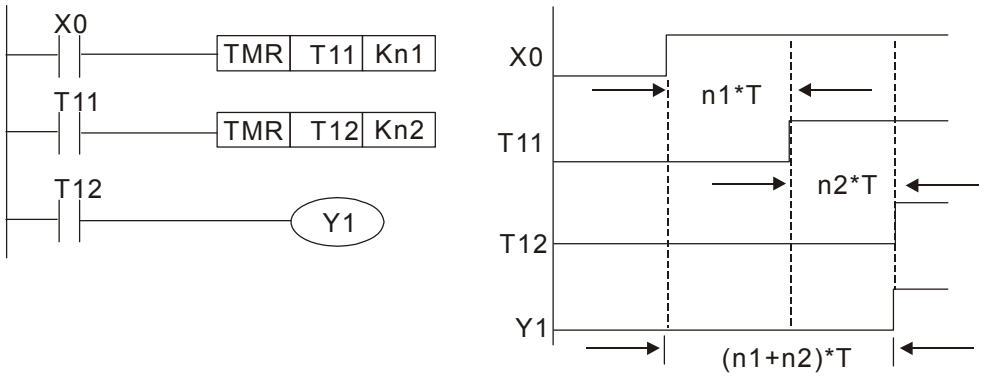

16-5 Various PLC device functions

Item	Specifications	Notes
Algorithmic control method	Program stored internally, alternating back-and-forth scanning method	
Input/output control method	When it starts again after ending (after execution to the END command), the input/output has an immediate refresh command	
Algorithmic processing speed	Basic commands (several us);	Applications command (1-several tens of us)
Programming language	Command + ladder diagram	
Program capacity	10000 steps	
Input/output terminal	Input (X): 10, output (Y): 4	This number of contacts constitutes C2000 input/output contacts; other devices have different correspondences

Type	Device	Item		Range		Function
Relay bit form	X	External input relay		X0~X17, 16 points, octal number	Total 32 points	Corresponds to external input point
	Y	External output relay		Y0~Y17, 16 points, octal number		Corresponds to external output point
	M	Auxiliary Relay	General Use	M0~M799, 800 points	Total 880 points	Contact can switch On/Off within the program
			Special purpose	M1000~M1079, 80 points		
	T	Timer	100ms timer	T0~T159, 160 points	Total 160 points	Timers referred to by the TMR command; contact of the T with the same number will go On when the time is reached
	C	Counter	16-bit counter, general use	C0~C79, 80 points	Total 80 points	Counter referred to by the CNT command; contact of the C with the same number will go On when the count is reached
Register word data	T	Current timer value		T0~T159, 160 points		The contact will be On when the time is reached
	C	Current counter value		C0~C79, 16-bit counter 80 points		The counter contact will come On when the count is reached
	D	Data Register	Used to maintain power Off	D0~D399, 400 points	Total 1400 points	Used as data storage memory area
			Special purpose	D1000~D1199, 200 points D2000~D2799, 800 points		
Constant	K	Decimal	Single-byte	Setting Range: K-32,768 ~ K32,767		
			Double-byte	Setting Range: K-2,147,483,648~K2,147,483,647		
	H	Hexadecimal	Single-byte	Setting Range:H0000 ~ HFFFF		
			Double-byte	Setting Range: H00000000 ~ HFFFFFFFF		
Serial communications port (program write/read)				RS-485/keypad port		

Input/output		Built-in three analog inputs and two analog outputs
Function expansion module	Optional Accessories	EMC-D42A; EMC-R6AA; EMCD611A
Communication Expansion Module	Optional Accessories	EMC-COP01,(CANopen)

16-5-1 Introduction to device functions

Input/output contact functions

Input contact X functions: Input contact X is connected with an input device, and reads input signals entering the PLC. The number of times that contact a or b of input contact X is used in the program is not subject to restrictions. The On/Off state of input contact X will change as the input device switches On and Off; a peripheral device (WPLSoft) cannot be used to force contact X On or Off.

Output contact Y functions

The job of output contact Y is to send an On/Off signal to drive the load connected with output contact Y. Output contacts consist of two types: relays and transistors. While number of times that contact a or b of each output contact Y is used in the program is not subject to restrictions, it is recommended that the number of output coil Y be used only once in a program, otherwise the right to determine the output state when the PLC performs program scanning will be assigned to the program's final output Y circuit.

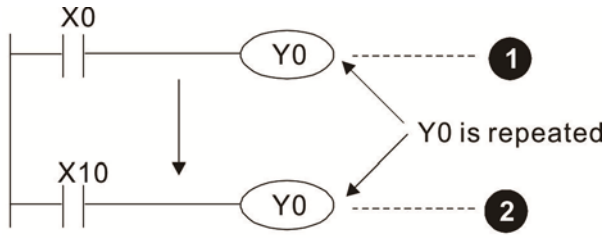

The output of Y0 will be decided by circuit ❷ ,
i.e. decided by On/Off of X10.

Numerical value, constant [K]/[H]

Constant	Single-byte	K	Decimal	K-32,768 ~ K32,767
	Double-byte			K-2,147,483,648~K2,147,483,647
	Single-byte	H	Hexadecimal	H0000 ~ HFFFF
	Double-byte			H00000000 ~ HFFFFFFFF

The PLC can use five types of numerical values to implement calculations based on its control tasks; the following is an explanation of the missions and functions of different numerical values.

Binary Number, BIN

The PLC's numerical operations and memory employ binary numbers. Binary nibbles and relevant terms are explained as follows:

Bit	Bits are the fundamental units of binary values, and have a state of either 1 or 0
Nibble	Comprised of a series of 4 bits (such as b3-b0); can be used to express a one-nibble decimal number 0-9 or hexadecimal number: 0-F.
Byte	Comprised of a series of two nibbles (i.e. 8 bits, b7-b0); can express a hexadecimal number: 00-FF.
Word	Comprised of a series of two bytes (i.e. 16 bits, b15-b0); can express a hexadecimal number with four nibbles: 0000-FFFF.
Double Word	Comprised of a series of two words (i.e. 32 bits, b31-b0); can express a hexadecimal number with eight nibbles: 00000000-FFFFFFFF

Relationship between bits, digits, nibbles, words, and double words in a binary system (see figure below):

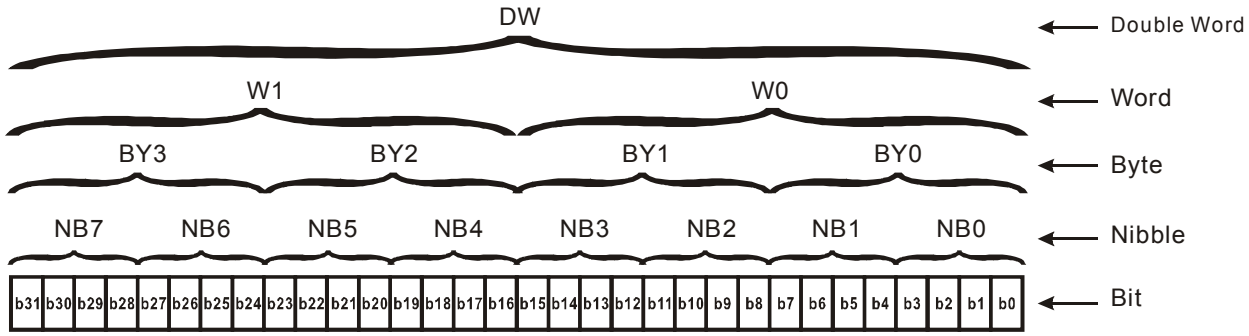

Octal Number, OCT

The external input and output terminals of a DVP-PLC are numbered using octal numbers

Example: External input: X0~X7，X10~X17…(Device number table);

External output: Y0~Y7，Y10~Y17…(Device number table)

Decimal Number, DEC

Decimal numbers are used for the following purposes in a PLC system:

The setting values of timer T or counter C, such as TMR C0 K50. (K constant)

The numbers of devices including M, T, C, or D, such as M10 or T30. (device number)

Used as a operand in an application command, such as MOV K123 D0. (K constant)

Binary Code Decimal, BCD

Uses one nibble or 4 bits to express the data in a decimal number; a series of 16 bits can therefore express a decimal number with 4 nibbles. Chiefly used to read the input value of a fingerwheel numerical switch input or output a numerical value to a seven-segment display driver.

Hexadecimal Number, HEX

Applications of hexadecimal numbers in a PLC system: Used as operands in application commands, such as MOV H1A2B D0. (H constant)

Constant K

Decimal numbers are usually prefixed with a "K" in a PLC system, such as K100. This indicates that it is a decimal number with a numerical value of 100.

Exceptions: K can be combined with bit device X, Y, M, or S to produce data in the form of a nibble, byte, word, or double word, such as in the case of K2Y10 or K4M100. Here K1 represents a 4-bit combination, and K2-K4 variously represent 8-, 12-, and 16-bit combinations.

Constant H

Hexadecimal numbers are usually prefixed with the letter "H" in a PLC system, such as in the case of H100, which indicates a hexadecimal number with a numerical value of 100.

Functions of auxiliary relays

Like an output relay Y, an auxiliary relay M has an output coil and contacts a and b, and the number of times they can be used in a program is unrestricted. Users can use an auxiliary relay M to configure the control circuit, but cannot use it to directly drive an external load. Auxiliary relays have the following two types of characteristics:

Ordinary auxiliary relays: Ordinary auxiliary relays will all revert to the Off state if a power outage occurs while the PLC is running, and will remain in the Off state if power is again turned down.

Special purpose auxiliary relays: Each special purpose auxiliary relay has its own specific use. Do not use any undefined special purpose auxiliary relays.

Timer functions

Timers take 100 ms as their timing units. When the timing method is an upper time limit, when the current timer value = set value, power will be sent to the output coil. Timer setting values consist of decimal K values, and the data register D can also serve as a setting value.

Actual timer setting time = timing units * set value

Counter features

Item	16-bit counter
Type	General Type
CT Direction:	Score:
Setting	0~32,767
Designation of set value	Constant K or data register D
Change in current value	When the count reaches the set value, there is no longer a count
Output contact	When the count reaches the set value, the contact comes On and stays On
Reset	The current value reverts to 0 when an RST command is executed, and the contact reverts to Off
Contact actuation	All are actuated after the end of scanning

Counter functions

When a counter's counting pulse input signal goes Off→On, if the counter's current value is equal to the set value, the output coil will come On. The setting value will be a decimal K values, and the data register D can also serve as a setting value.

16-bit counter C0-C79:

- ☑ 16-bit counter setting range: K0-K32,767. (when K0 and K1 are identical, the output contact will immediately be On during the first count.)
- ☑ The current counter value will be cleared from an ordinary counter when power is shut off to the PLC.
- ☑ If the MOV command or WPLSoft is used to transmit a value greater than the set value to the C0 current value register, when the next X1 goes from Off→On, the C0 counter contact will change to On, and the current value will change to the set value.
- ☑ A counter's setting value may be directly set using a constant K or indirectly set using the value in register D (not including special data registers D1000- D1199 或 D2000 ~ D2799).
- ☑ If the set value employs a constant K, it may only be a positive number; the set value may be either a positive or negative number if the value in data register D is used. The current counter value will change from 32,767 to -32,768 as the count continues to accumulate.

Example

```
LD      X0
RST     C0
LD      X1
CNT     C0   K5
LD      C0
OUT     Y0
```

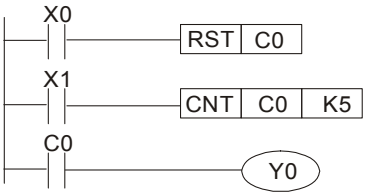

1. When X0=On and the RST command is executed, the current value of C0 will revert to 0, and the output contact will revert to Off.
2. When X1 changes from Off→On, the current value of the counter will execute an increase (add one).
3. When the count of counter C0 reaches the set value K5, the contact C0 will come On, and the current value of C0＝ set value =K5. Afterwards, signal C0 triggered by X1 cannot be received, and the current value of C0 will remain K5.

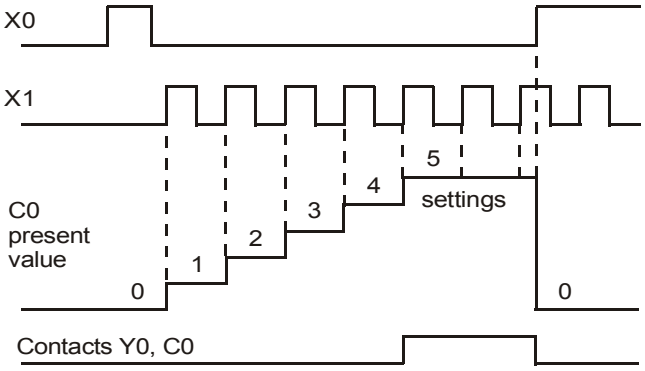

16-5-2 Introduction to special relay functions (special M)

R/W items: RO: read only function; RW: read and write function

Special M	Description of Function	R/W *
M1000	Operates monitor NO contact (contact a). NO while RUN, contact a. This contact is On while in the RUN state.	RO
M1001	Operates monitor NC contact (contact b). NC while RUN, contact b. This contact is Off while in the RUN state.	RO
M1002	Initiates a forward (the instant RUN is On) pulse. Initial pulse, contact a. Produces a forward pulse the moment RUN begins; its width = scan cycle	RO
M1003	Initiates a reverse (the instant RUN is Off) pulse. Initial pulse, contact a. Produces a reverse pulse the moment RUN ends; the pulse width = scan cycle	RO
M1004	Reserved	RO
M1005	Driver malfunction instructions	RO
M1006	Converter has no output	RO
M1007	Driver direction FWD(0)/REV(1)	RO
M1008 ~ M1010	--	--
M1011	10 ms clock pulse ，5ms On/5ms Off	RO
M1012	100 ms clock pulse ，50ms On / 50ms Off	RO
M1013	1 sec. clock pulse ，0.5s On / 0.5s Off	RO
M1014	1 min. clock pulse ，30s On / 30s Off	RO
M1015	Frequency attained (when used together with M1025)	RO

Special M	Description of Function	R/W *
M1016	Parameter read/write error	RO
M1017	Parameter write successful	RO
M1018	--	--
M1019	--	--
M1020	Zero flag	RO
M1021	Borrow flag	RO
M1022	Carry flag	RO
M1023	Divisor is 0	RO
M1024	--	--
M1025	Driver frequency = set frequency (ON) Driver frequency =0(OFF)	RW
M1026	Driver operating direction FWD(OFF)/REV(ON)	RW
M1027	Driver Reset	RW
M1028	--	--
M1029	--	--
M1030	--	--
M1031	Compulsory setting of the current PID integral value equal to D1019 (0 change, 1 valid)	RW
M1032	Compulsory definition of FREQ command after PID control	RW
M1033	--	--
M1034	Initiates CANopen real-time control	RW
M1035	Initiates internal communications control	RW
M1036	Ignore calendar error	RW
M1037	--	--
M1038	MI8 count begins	RW
M1039	Reset MI8 count value	RW
M1040	Hardware power (Servo On)	RW
M1041	--	--
M1042	Quick stop	RW
M1043	--	--
M1044	Pause	RW
M1045 ~ M1047	--	--
M1048	Move to new position	RW
M1049	--	--
M1050	Absolute position/relative position (0: relative/1: absolute)	RW
M1051	--	--
M1052	Lock frequency (lock, frequency locked at the current operating frequency)	RW
M1053	--	--
M1054	Compulsory reset of absolute position	RW
M1055	Search Origin	RW
M1056	Hardware already has power (Servo On Ready)	RO
M1057	--	--
M1058	On Quick Stopping	RO
M1059	CANopen Master setting complete	RO
M1060	CANopen Currently initializing slave station	RO
M1061	CANopen Slave station initialization failure	RO
M1062	--	--
M1063	Torque attained	RO
M1064	Target reached	RO
M1065	Read/write CANOpen data time out	RO
M1066	Read/write CANopen data complete	RO
M1067	Read/write CANopen data successful	RO
M1068	Calendar calculation error	RO

Special M	Description of Function	R/W *
M1069	--	--
M1070	Return home complete	RO
M1071	Homing error	RO
M1072 ~ M1075	--	--
M1076	Calendar time error or refresh time out	RO
M1077	485 Read/write complete	RO
M1078	485 Read-write error	RO
M1079	485 Communications time out	RO

16-5-3 Introduction to special register functions (special D)

Special D	Description of Function	R/W *
D1000	--	--
D1001	Device system program version	RO
D1002	Program capacity	RO
D1003	Total program memory content	RO
D1004 ~ D1009	--	--
D1010	Current scan time (units: 0.1 ms)	RO
D1011	Minimum scan time (units: 0.1 ms)	RO
D1012	Maximum scan time (units: 0.1 ms)	RO
D1013 ~ D1017	--	--
D1018	Current integral value	RO
D1019	Compulsory setting of PID I integral	RW
D1020	Output frequency (0.000~600.00Hz)	RO
D1021	Output current (####.#A)	RO
D1022	AI AO DI DO Expansion card number 0：No expansion card 4：AC input card (6 in) (EMC-D611A) 5：I/O Card (4 in 2 out) (EMC-D42A) 6：Relay card(6 out) (EMC-R6AA)	RO
D1023	Communication expansion card number 0：No expansion card 1：DeviceNet Slave 2：Profibus-DP Slave 3：CANopen Slave 4：Modbus-TCP Slave 5：EtherNet/IP Slave	RO
D1024 ~ D1026	--	--
D1027	PID calculation frequency command (frequency command after PID calculation)	RO
D1028	AVI value (0.00~100.00%)	RO
D1029	ACI value (0.0~100.00%)	RO
D1030	AUI value (-100.0~100.00%)	RO
D1031	--	--

Special D	Description of Function	R/W *
~ D1035		
D1036	Servo error bit	RO
D1037	Driver output frequency	RO
D1038	DC BUS voltage	RO
D1039	Output voltage	RO
D1040	Analog output value AFM1(-100.00~100.00%)	RW
D1041 ~ D1042	--	--
D1043	Can be user-defined (will be displayed on panel when parameter 00-04 is set as 28; display method is C xxx)	RW
D1044	--	-
D1045	Analog output value AFM2(-100.00~100.00%)	RW
D1046 ~ D1049	--	--
D1050	Actual Operation Mode 0：Speed 1：Position 2：Torque 3：Homing Origin	RO
D1051	Actual position (Low word)	RO
D1052	Actual position (High word)	RO
D1053	Actual torque	RO
D1054	MI8 current calculated count value (L Word)	RO
D1055	MI8 current calculated count value (H Word)	RO
D1056	Rotational speed corresponding to MI8	RO
D1057	MI8's rotational speed ratio	RW
D1058	MI8 refresh rate (ms) corresponding to rotational speed	RW
D1059	Number of nibbles of rotational speed corresponding to MI8 (0-3)	RW
D1060	Operation Mode setting 0：Speed 1：Position 2：Torque 3：Homing Origin	RW
D1061	485 COM1 communications time out time (ms)	RW
D1062	Torque command (torque limit in speed mode)	RW
D1063	Year (Western calendar) (display range 2000-2099) (must use KPC-CC01)	RO
D1064	Week (display range 1-7) (must use KPC-CC01)	RO
D1065	Month (display range 1-12) (must use KPC-CC01)	RO
D1066	Day (display range 1-31) (must use KPC-CC01)	RO
D1067	Hour (display range 0-23) (must use KPC-CC01)	RO
D1068	Minute (display range 0-59) (must use KPC-CC01)	RO
D1069	Second (display range 0-59) (must use KPC-CC01)	RO
D1100	Target frequency	RO
D1101	Target frequency (must be operating)	RO
D1102	Reference frequency	RO
D1103	Target L	RO
D1104	Target H	RO
D1105	Target torque	RO
D1106	--	--
D1107	π(Pi) Low word	RO
D1108	π(Pi) High word	RO

Special D	Description of Function	R/W *
D1109	Random number	RO
D1110	Internal node communications number (set number of slave stations to be controlled)	RW
D1111	Encoder Pulses L	RO
D1112	Encoder Pulses H	RO
D1113	--	RO
D1114	--	--
D1115	Internal node synchronizing cycle (ms)	RO
D1116	Internal node error (bit0 = Node 0, bit1 = Node 1,…bit7 = Node 7)	RO
D1117	Internal node online correspondence (bit0 = Node 0, bit1 = Node 1,…bit7 = Node 7)	RO
D1118	--	--
D1119	--	--
D1120	Internal node 0 control command	RW
D1121	Internal node 0 mode	RW
D1122	Internal node 0 reference command L	RW
D1123	Internal node 0 reference command H	RW
D1124	--	--
D1125	--	--
D1126	Internal node 0 status	RO
D1127	Internal node 0 reference status L	RO
D1128	Internal node 0 reference status H	RO
D1129	--	--
D1130	Internal node 1 control command	RW
D1131	Internal node 1 mode	RW
D1132	Internal node 1 reference command L	RW
D1133	Internal node 1 reference command H	RW
D1134	--	--
D1135	--	--
D1136	Internal node 1 status	RO
D1137	Internal node 1 reference status L	RO
D1138	Internal node 1 reference status H	RO
D1139	--	--
D1140	Internal node 2 control command	RW
D1141	Internal node 2 mode	RW
D1142	Internal node 2 reference command L	RW
D1143	Internal node 2 reference command H	RW
D1144	--	--
D1145	--	--
D1146	Internal node 2 status	RO
D1147	Internal node 2 reference status L	RO
D1148	Internal node 2 reference status H	RO
D1149	--	--
D1150	Internal node 3 control command	RW
D1151	Internal node 3 mode	RW
D1152	Internal node 3 reference command L	RW
D1153	Internal node 3 reference command H	RW
D1154	--	--
D1155	--	--
D1156	Internal node 3 status	RO
D1157	Internal node 3 reference status L	RO
D1158	Internal node 3 reference status H	RO
D1159	--	--
D1160	Internal node 4 control command	RW

Special D	Description of Function	R/W *
D1161	Internal node 4 mode	RW
D1162	Internal node 4 reference command L	RW
D1163	Internal node 4 reference command H	RW
D1164	--	--
D1165	--	--
D1166	Internal node 4 status	RO
D1167	Internal node 4 reference status L	RO
D1168	Internal node 4 reference status H	RO
D1169	--	--
D1170	Internal node 5 control command	RW
D1171	Internal node 5 mode	RW
D1172	Internal node 5 reference command L	RW
D1173	Internal node 5 reference command H	RW
D1174	--	RW
D1175	--	--
D1176	Internal node 5 status	--
D1177	Internal node 5 reference status L	RO
D1178	Internal node 5 reference status H	RO
D1179	--	--
D1180	Internal node 6 control command	RW
D1181	Internal node 6 mode	RW
D1182	Internal node 6 reference command L	RW
D1183	Internal node 6 reference command H	RW
D1184	--	--
D1185	--	--
D1186	Internal node 6 status	RO
D1187	Internal node 6 reference status L	RO
D1188	Internal node 6 reference status H	RO
D1189	--	--
D1190	Internal node 7 control command	RW
D1191	Internal node 7 mode	RW
D1192	Internal node 7 reference command L	RW
D1193	Internal node 7 reference command H	RW
D1194	--	--
D1195	--	--
D1196	Internal node 7 status	RO
D1197	Internal node 7 reference status L	RO
D1198	Internal node 7 reference status H	RO
D1199	--	--

The following is CANopen Master's special D (can be written in only with PLC in Stop state)

n = 0 ~ 7

Special D	Description of Function	PDO Map	Power off Memory	Default:	R/W
D1070	Channel opened by CANopen initialization (bit0=Machine code0 …….)	NO	NO	0	R
D1071	Error channel occurring in CANopen initialization process (bit0=Machine code0 …….)	NO	NO	0	R
D1072	Reserved	-	-		-
D1073	CANopen break channel (bit0=Machine code0 …….)	NO	NO		R

Special D	Description of Function	PDO Map	Power off Memory	Default:	R/W
D1074	Error code of master error 0: No error 1: Slave station setting error 2: Synchronizing cycle setting error (too small)	NO	NO	0	R
D1075	Reserved	-	-		-
D1076	SDO error message (main index value)	NO	NO		R
D1077	SDO error message (secondary index value)	NO	NO		R
D1078	SDO error message (error code)	NO	NO		R
D1079	SDO error message (error code)	NO	NO		R
D1080	Reserved	-	-		-
D1081 ~ D1086	Reserved	-	-		-
D1087 ~ D1089	Reserved	-	-		-
D1090	Synchronizing cycle setting	NO	YES	4	RW
D1091	Sets slave station On or Off (bit 0-bit 7 correspond to slave stations number 0-7)	NO	YES	FFFFH	RW
D1092	Delay before start of initialization	NO	YES	0	RW
D1093	Break time detection	NO	YES	1000ms	RW
D1094	Break number detection	NO	YES	3	RW
D1095 ~ D1096	Reserved	-	-		-
D1097	Corresponding real-time transmission type (PDO) Setting range: 1~240	NO	YES	1	RW
D1098	Corresponding real-time receiving type (PDO) Setting range: 1~240	NO	YES	1	RW
D1099	Initialization completion delay time Setting range: 1 to 60000 sec	NO	YES	15 sec.	RW
D2000+100*n	Station number n of slave station Setting range: 0~127 0: No CANopen function	NO	YES	0	RW

The C2000 supports 8 slave stations under the CANopen protocol; each slave station occupies 100 special D locations; stations are numbered 1-8, total of 8 stations.

Explanation of slave station number and

Slave station no. 1	D2000	Node ID
	D2001	Slave station no. 1 torque restrictions
	~	~
	D2099	Address 4(H) corresponding to receiving channel 4
Slave station no. 2	D2100	Node ID
	D2101	Slave station no. 2 torque restrictions
	~	~
	D2199	Address 4(H) corresponding to receiving channel 4
Slave station no. 3	D2200	Node ID
	D2201	Slave station no. 3 torque restrictions
	~	~
	D2299	Address 4(H) corresponding to receiving channel 4
	⇩	
Slave station no. 8	D2700	Node ID
	D2701	Slave station no. 8 torque restrictions
	~	~
	D2799	Address 4(H) corresponding to receiving channel 4

1. The range of n is 0-7

2. ●Indicates PDOTX, ▲Indicates PDORX; unmarked special D can be refreshed using the CANFLS command

Special D	Description of Function	Default:	R/W
D2000+100*n	Station number n of slave station Setting range: 0~127 0: No CANopen function	0	RW
D2002+100*n	Manufacturer code of slave station number n (L)	0	R
D2003+100*n	Manufacturer code of slave station number n (H)	0	R
D2004+100*n	Manufacturer's product code of slave station number n (L)	0	R
D2005+100*n	Manufacturer's product code of slave station number n (H)	0	R

Basic definitions

Special D	Description of Function	Default:	CAN Index	PDO Default:				R/W
				1	2	3	4	
D2006+100*n	Communications break handling method of slave station number n	0	6007H-0010H					RW
D2007+100*n	Error code of slave station number n error	0	603FH-0010H					R
D2008+100*n	Control word of slave station number n	0	6040H-0010H	●		●	●	RW
D2009+100*n	Status word of slave station number n	0	6041H-0010H	▲		▲	▲	R
D2010+100*n	Control mode of slave station number n	2	6060H-0008H					RW
D2011+100*n	Actual mode of slave station number n	2	6061H-0008H					R

Velocity Control

Slave station number n=0-7

Special D	Description of Function	Default:	CAN Index	PDO Default:				R/W
				1	2	3	4	
D2001+100*n	Torque restriction on slave station number n	0	6072H-0010H					RW
D2012+100*n	Target speed of slave station number n	0	6042H-0010H	●				RW
D2013+100*n	Actual speed of slave station number n	0	6043H-0010H	▲				R
D2014+100*n	Error speed of slave station number n	0	6044H-0010H					R
D2015+100*n	Acceleration time of slave station number n	1000	604FH-0020H					R
D2016+100*n	Deceleration time of slave station number n	1000	6050H-0020H					RW

Torque control

Slave station number n=0-7

Special D	Description of Function	Default:	CAN Index	PDO Default:				R/W
				1	2	3	4	
D2017+100*n	Target torque of slave station number n	0	6071H-0010H				●	RW
D2018+100*n	Actual torque of slave station number n	0	6077H-0010H				▲	R
D2019+100*n	Actual current of slave station number n	0	6078H-0010H					R

Position control

Slave station number n=0-7

Special D	Description of Function	Default:	CAN Index	PDO Default:				R/W
				1	2	3	4	
D2020+100*n	Target of slave station number n (L)	0	607AH-0020H			●		RW
D2021+100*n	Target of slave station number n (H)	0						RW
D2022+100*n	Actual position of slave station number n (L)	0	6064H-0020H			▲		R
D2023+100*n	Actual position of slave station number n (H)	0						R
D2024+100*n	Speed chart of slave station number n (L)	10000	6081H-0020H					RW
D2025+100*n	Speed chart of slave station number n (H)	0						RW

20XXH correspondences: MI MO AI AO

Slave station number n=0-7

Special D	Description of Function	Default:	CAN Index	PDO Default:				R/W
				1	2	3	4	
D2026+100*n	MI status of slave station number n	0	2026H-0110H		▲			RW
D2027+100*n	MO setting of slave station number n	0	2026H-4110H		●			RW
D2028+100*n	AI1 status of slave station number n	0	2026H-6110H		▲			RW
D2029+100*n	AI2 status of slave station number n	0	2026H-6210H		▲			RW
D2030+100*n	AI3 status of slave station number n	0	2026H-6310H		▲			RW
D2031+100*n	AO1 status of slave station number n	0	2026H-A110H		●			RW
D2032+100*n	AO2 status of slave station number n	0	2026H-A210H		●			RW
D2033+100*n	AO3 status of slave station number n	0	2026H-A310H		●			RW

PDO reflection length setting:

Special D	Description of Function	Default:	R/W
D2034+100*n	Real-time transmission setting of slave station number n	000AH	RW
D2067+100*n	Real-time reception setting of slave station number n	0000H	RW

16-5-4 PLC Communication address

Device	Range	Type	Address (Hex)
X	00~37 (Octal)	bit	0400~041F
Y	00~37 (Octal)	bit	0500~051F
T	00~159	bit/word	0600~069F
M	000~799	bit	0800~0B1F
M	1000~1079	bit	0BE8~0C37
C	0~79	bit/word	0E00~0E47
D	00~399	word	1000~118F
D	1000~1099	word	13E8~144B
D	2000~2799	word	17D0~1AEF

Command code that can be used

Function Code	Description of Function	Function target
01	Coil status read	Y,M,T,C
02	Input status read	X,Y,M,T,C
03	Read single unit of data	T,C,D
05	Compulsory single coil status change	Y,M,T,C
06	Write single unit of data	T,C,D
0F	Compulsory multiple coil status change	Y,M,T,C
10	Write multiple units of data	T,C,D

NOTE

When PLC functions have been activated, the C2000 can match PLC and driver parameters; this method employs different addresses, drivers (default station number is 1, PLC sets station number as 2)

16-6 Introduction to the Command Window

16-6-1 Overview of basic commands

Ordinary commands

Command code	Function	OPERAND	Execution speed (us)
LD	Load contact a	X、Y、M、T、C	0.8
LDI	Load contact b	X、Y、M、T、C	0.8
AND	Connect contact a in series	X、Y、M、T、C	0.8
ANI	Connect contact b in series	X、Y、M、T、C	0.8
OR	Connect contact a in parallel	X、Y、M、T、C	0.8
ORI	Connect contact b in parallel	X、Y、M、T、C	0.8
ANB	Series circuit block	N/A	0.3
ORB	Parallel circuit block	N/A	0.3
MPS	Save to stack	N/A	0.3
MRD	Stack read (pointer does not change)	N/A	0.3
MPP	Read stack	N/A	0.3

Output command

Command code	Function	OPERAND	Execution speed (us)
OUT	Drive coil	Y、M	1
SET	Action continues (ON)	Y、M	1
RST	Clear contact or register	Y、M、T、C、D	1.2

Timer, counter

Command code	Function	OPERAND	Execution speed (us)
TMR	16-bit timer	T-K or T-D commands	1.1
CNT	16-bit counter	C-K or C-D (16-bit)	0.5

Main control command

Command code	Function	OPERAND	Execution speed (us)
MC	Common series contact connection	N0~N7	0.4
MCR	Common series contact release	N0~N7	0.4

Contact rising edge/falling edge detection command

Command code	Function	OPERAND	Execution speed (us)
LDP	Start of forward edge detection action	X、Y、M、T、C	1.1
LDF	Start of reverse edge detection action	X、Y、M、T、C	1.1
ANDP	Forward edge detection series connection	X、Y、M、T、C	1.1
ANDF	Reverse edge detection series connection	X、Y、M、T、C	1.1
ORP	Forward edge detection parallel connection	X、Y、M、T、C	1.1
ORF	Reverse edge detection parallel connection	X、Y、M、T、C	1.1

Upper/lower differential output commands

Command code	Function	OPERAND	Execution speed (us)
PLS	Upper differential output	Y、M	1.2
PLF	Lower differential output	Y、M	1.2

Stop command

Command code	Function	OPERAND	Execution speed (us)
END	Program conclusion	N/A	0.2

Other commands

Command code	Function	OPERAND	Execution speed (us)
NOP	No action	N/A	0.2
INV	Inverse of operation results	N/A	0.2
P	Index	P	0.3

16-6-2 Detailed explanation of basic commands

Command	Function					
LD	Load contact a					
Operand	X0~X17	Y0~Y17	M0~M799	T0~159	C0~C79	D0~D399
	✓	✓	✓	✓	✓	—

Explanation: The LD command is used for contact a starting at the left busbar or contact a starting at a contact circuit block; its function is to save current content and save the acquired contact status in the cumulative register.

Example: Ladder diagram:

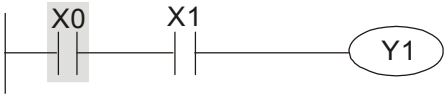

Command code:		Description:
LD	**X0**	Load Contact a of X0
AND	X1	Create series connection to contact a of X1
OUT	Y1	Drive Y1 coil

Command	Function					
LDI	Load contact b					
Operand	X0~X17	Y0~Y17	M0~M799	T0~159	C0~C79	D0~D399
	✓	✓	✓	✓	✓	—

Explanation: The LDI command is used for contact b starting at the left busbar or contact b starting at a contact circuit block; its function is to save current content and save the acquired contact status in the cumulative register.

Example: Ladder diagram:

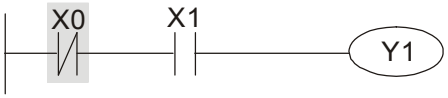

Command code:		Description:
LDI	**X0**	Load Contact b of X0
AND	X1	Create series connection to contact a of X1
OUT	Y1	Drive Y1 coil

Command	Function					
AND	Connect contact a in series					
Operand	X0~X17	Y0~Y17	M0~M799	T0~159	C0~C79	D0~D399
	✓	✓	✓	✓	✓	—

Explanation

The AND command is used to create a series connection to contact a; first reads current status of the designated series contact and logical operation results before contact in order to perform "AND" operation; saves results in cumulative register.

Example

Ladder diagram:

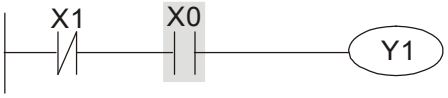

Command code:		Description:
LDI	X1	Load Contact b of X1
AND	**X0**	Create series connection to contact a of X0
OUT	Y1	Drive Y1 coil

Command	Function					
ANI	Connect contact b in series					
Operand	X0~X17	Y0~Y17	M0~M799	T0~159	C0~C79	D0~D399
	✓	✓	✓	✓	✓	—

Explanation

The ANI command is used to create a series connection to contact b; its function is to first read current status of the designated series contact and logical operation results before contact in order to perform "AND" operation; saves results in cumulative register.

Example

Ladder diagram:

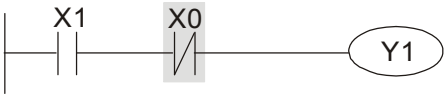

Command code:		Description:
LD	X1	Load Contact a of X1
ANI	**X0**	Create series connection to contact b of X0
OUT	Y1	Drive Y1 coil

Command	Function					
OR	Connect contact a in parallel					
Operand	X0~X17	Y0~Y17	M0~M799	T0~159	C0~C79	D0~D399
	✓	✓	✓	✓	✓	—

Explanation

The OR command is used to establish a parallel connection to contact a; its function is to first read current status of the designated series contact and logical operation results before contact in order to perform "OR" operation; saves results in cumulative register.

Example

Ladder diagram:

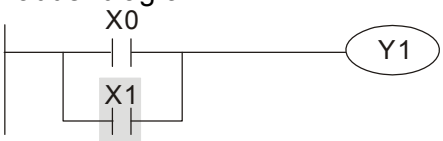

Command code:		Description:
LD	X0	Load Contact a of X0
OR	**X1**	Create series connection to contact a of X1
OUT	Y1	Drive Y1 coil

Command	Function
ORI	Connect contact b in parallel

Operand	X0~X17	Y0~Y17	M0~M799	T0~159	C0~C79	D0~D399
	✓	✓	✓	✓	✓	—

Explanation

The ORI command is used to establish a parallel connection to contact a; its function is to first read current status of the designated series contact and logical operation results before contact in order to perform "OR" operation; saves results in cumulative register.

Example

Ladder diagram:

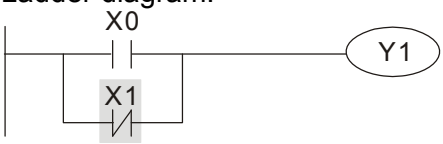

Command code:		Description:
LD	X0	Load Contact a of X0
ORI	**X1**	Create series connection to contact b of X1
OUT	Y1	Drive Y1 coil

Command	Function
ANB	Series circuit block
Operand	N/A

Explanation

ANB performs an "AND" operation on the previously saved logic results and the current cumulative register content.

Example

Ladder diagram:

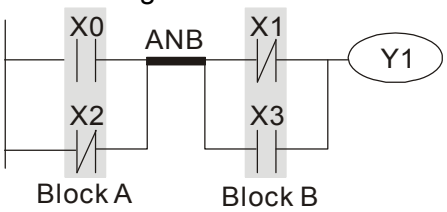

Command code:		Description:
LD	X0	Load Contact a of X0
ORI	X2	Establish parallel connection to contact b of X2
LDI	X1	Load Contact b of X1
OR	X3	Establish parallel connection to contact a of X3
ANB		Series circuit block
OUT	Y1	Drive Y1 coil

Command	Function
ORB	Parallel circuit block
Operand	N/A

Explanation

ORB performs an "OR" operation on the previously saved logic results and the current cumulative register content.

Example

Ladder diagram:

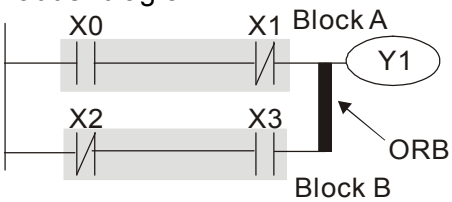

Command code:		Description:
LD	X0	Load Contact a of X0
ANI	X1	Establish parallel connection to contact b of X1
LDI	X2	Load Contact b of X2
AND	X3	Establish parallel connection to contact a of X3
ORB		Parallel circuit block
OUT	Y1	Drive Y1 coil

Command	Function
MPS	Save to stack
Operand	N/A

Explanation

Save current content of cumulative register to the stack. (Add one to stack pointer)

Command	Function
MRD	Read stack (pointer does not change)
Operand	N/A

Explanation: Reads stack content and saves to cumulative register. (Stack pointer does not change)

Command	Function
MPP	Read stack
Operand	N/A

Explanation: Retrieves result of previously-save logical operation from the stack, and saves to cumulative register. (Subtract one from stack pointer)

Example: Ladder diagram:

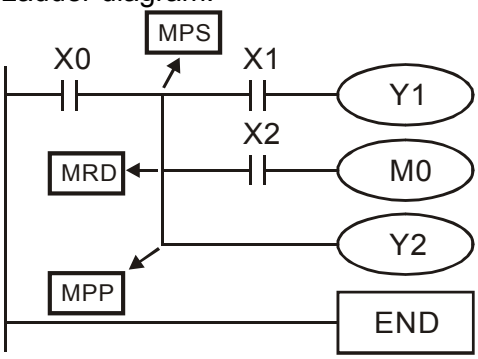

Command code:		Description:
LD	X0	Load Contact a of X0
MPS		Save to stack
AND	X1	Create series connection to contact a of X1
OUT	Y1	Drive Y1 coil
MRD		Read stack (pointer does not change)
AND	X2	Create series connection to contact a of X2
OUT	M0	Drive M0 coil
MPP		Read stack
OUT	Y2	Drive Y2 coil
END		Program conclusion

Command	Function					
OUT	Drive coil					
Operand	X0~X17	Y0~Y17	M0~M799	T0~159	C0~C79	D0~D399
	—	✓	✓	—	—	—

Explanation: Outputs result of logical operation before OUT command to the designated element.
Coil contact action:

Result:	Out command		
	Coil	Access Point:	
		Contact a (NO)	Contact b (NC)
FALSE	Off	Not conducting	Conducting
TRUE	On	Conducting	Not conducting

Example: Ladder diagram:

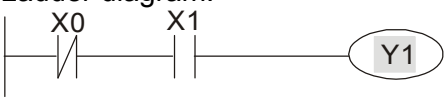

Command code:		Description:
LD	X0	Load Contact b of X0
AND	X1	Establish parallel connection to contact a of X1
OUT	**Y1**	Drive Y1 coil

Command	Function					
SET	Action continues (ON)					
Operand	X0~X17	Y0~Y17	M0~M799	T0~159	C0~C79	D0~D399
	—	✓	✓	—	—	—

Explanation: When the SET command is driven, the designated element will be set as On, and will be maintained in an On state, regardless of whether the SET command is still driven. The RST command can be used to set the element as Off.

Example: Ladder diagram:

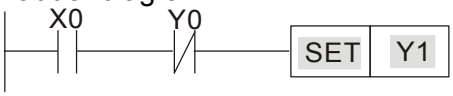

Command code:		Description:
LD	X0	Load Contact a of X0
AN	Y0	Establish parallel connection to contact b of Y0
SET	**Y1**	Action continues (ON)

Command	Function					
RST	Clear contact or register					
Operand	X0~X17	Y0~Y17	M0~M799	T0~159	C0~C79	D0~D399
	—	✓	✓	✓	✓	✓

Explanation

When the RST command is driven, the action of the designated element will be as follows:

Element	Mode
Y, M	Both coil and contact will be set as Off.
T, C	The current timing or count value will be set as 0, and both the coil and contact ill be set as Off.
D	The content value will be set as 0.

If the RST command has not been executed, the status of the designated element will remain unchanged.

Example

Ladder diagram:

Command code:		Description:
LD	X0	Load Contact a of X0
RST	**Y5**	Clear contact or register

Command	Function	
TMR	16-bit timer	
Operand	T-K	T0~T159，K0~K32,767
	T-D	T0~T159，D0~D399

Explanation

When the TMR command is executed, the designated timer coil will be electrified, and the timer will begin timing. The contact's action will be as follows when the timing value reaches the designated set value (timing value >= set value):

NO (Normally Open) contact	Closed
NC (Normally Close) contact	Open

If the RST command has not been executed, the status of the designated element will remain unchanged.

Example

Ladder diagram:

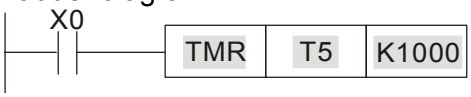

Command code:		Description:
LD	X0	Load Contact a of X0
TMR	T5 K1000	T5 timer Set value as K1000

Command	Function	
CNT	16-bit counter	
Operand	C-K	C0~C79，K0~K32,767
	C-D	C0~C79，D0~D399

Explanation

When the CNT command is executed from Off→On, this indicates that the designated counter coil goes from no power → electrified, and 1 will be added to the counter's count value; when the count reaches the designated value (count value = set value), the contact will have the following action:

NO (Normally Open) contact	Closed
NC (Normally Close) contact	Open

After the count value has been reached, the contact and count value will both remain unchanged even if there is continued count pulse input. Please use the RST command if you wish to restart or clear the count.

Example

Ladder diagram:

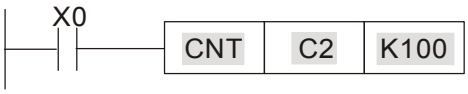

Command code:		Description:
LD	X0	Load Contact a of X0
CNT	**C2 K100**	C2counter Set value as K100

Command	Function
MC/MCR	Connect/release a common series contact
Operand	N0~N7

Explanation

MC is the main control initiation command, and any commands between MC and MCR will be executed normally. When the MC command is Off, any commands between MC and MCR will act as follows:

Determination of commands	Description
Ordinary timer	The timing value will revert to 0, the coil will lose power, and the contact will not operate
Counter	The coil will lose power, and the count value and contact will stay in their current state
Coil driven by OUT command	None receive power
Elements driven by SET, RST commands	Will remain in their current state
Applications commands	None are actuated

MCR is the main control stop command, and is placed at the end of the main control program. There may not be any contact commands before the MCR command.
The MC-MCR main control program commands support a nested program structure with a maximum only 8 levels; use in the order N0-N7, please refer to the following program:

Example

Ladder diagram:

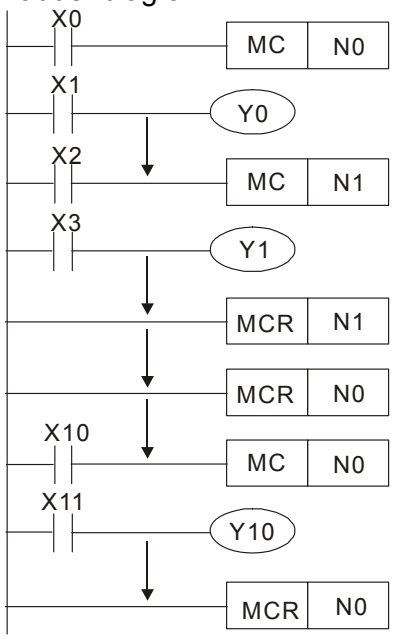

Command code:		Description:
LD	X0	Load Contact a of X0
MC	**N0**	Connection of N0 common series contact
LD	X1	Load Contact a of X1
OUT	Y0	Drive Y0 coil
:		
LD	X2	Load Contact a of X2
MC	**N1**	Connection of N1 common series contact
LD	X3	Load Contact a of X3
OUT	Y1	Drive Y1 coil
:		
MCR	**N1**	Release N1 common series contact
:		
MCR	**N0**	Release N0 common series contact
:		
LD	X10	Load Contact a of X10
MC	**N0**	Connection of N0 common series contact
LD	X11	Load Contact a of X11
OUT	Y10	Drive Y10 coil
:		
MCR	**N0**	Release N0 common series contact

Command	Function					
LDP	Start of forward edge detection action					
Operand	X0~X17	Y0~Y17	M0~M799	T0~159	C0~C79	D0~D399
	✓	✓	✓	✓	✓	—

Explanation

The LDP command has the same usage as LD, but its action is different; its function is to save current content, while also saving the detected state of the rising edge of the contact to the cumulative register.

Example

Ladder diagram:

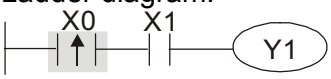

Command code:		Description:
LDP	**X0**	Start of X0 forward edge detection action
AND	X1	Create series connection to contact a of X1
OUT	Y1	Drive Y1 coil

Remark

Please refer to the function specifications table for each device in series for the scope of usage of each operand.
A rising edge contact will be TRUE after power is turned on if the rising edge contact is On before power is turned on to the PLC.

Command	Function					
LDF	Start of reverse edge detection action					
Operand	X0~X17	Y0~Y17	M0~M799	T0~159	C0~C79	D0~D399
	✓	✓	✓	✓	✓	—

Explanation

The LDF command has the same usage as LD, but its action is different; its function is to save current content while also saving the detected state of the falling edge of the contact to the cumulative register.

Example

Ladder diagram:

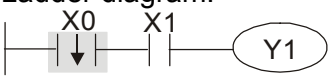

Command code:		Description:
LDF	**X0**	Start of X0 reverse edge detection action
AND	X1	Create series connection to contact a of X1
OUT	Y1	Drive Y1 coil

Command	Function					
ANDP	Forward edge detection series connection					
Operand	X0~X17	Y0~Y17	M0~M799	T0~159	C0~C79	D0~D399
	✓	✓	✓	✓	✓	—

Explanation

The ANDP command used for a contact rising edge detection series connection.

Example

Ladder diagram:

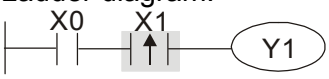

Command code:		Description:
LD	X0	Load Contact a of X0
ANDP	**X1**	X1 Forward edge detection series connection
OUT	Y1	Drive Y1 coil

Command	Function					
ANDF	Reverse edge detection series connection					
Operand	X0~X17	Y0~Y17	M0~M799	T0~159	C0~C79	D0~D399
	✓	✓	✓	✓	✓	—

Explanation The ANDF command is used for a contact falling edge detection series connection.

Example

Ladder diagram:

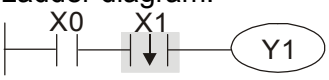

Command code:		Description:
LD	X0	Load Contact a of X0
ANDF	**X1**	X1 Reverse edge detection series connection
OUT	Y1	Drive Y1 coil

Command	Function					
ORP	Forward edge detection parallel connection					
Operand	X0~X17	Y0~Y17	M0~M799	T0~159	C0~C79	D0~D399
	✓	✓	✓	✓	✓	—

Explanation The ORP command is used for a contact rising edge detection parallel connection.

Example

Ladder diagram:

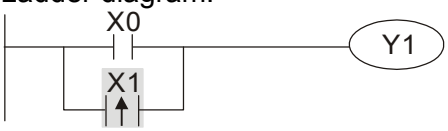

Command code:		Description:
LD	X0	Load Contact a of X0
ORP	**X1**	X1 Forward edge detection parallel connection
OUT	Y1	Drive Y1 coil

Command	Function					
ORF	Reverse edge detection parallel connection					
Operand	X0~X17	Y0~Y17	M0~M799	T0~159	C0~C79	D0~D399
	✓	✓	✓	✓	✓	—

Explanation The ORF command is used for contact falling edge detection parallel connection.

Example

Ladder diagram:

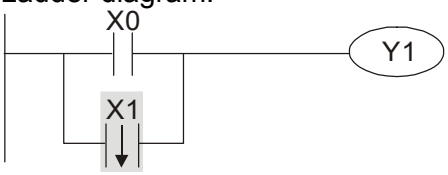

Command code:		Description:
LD	X0	Load Contact a of X0
ORF	**X1**	X1 Reverse edge detection parallel connection
OUT	Y1	Drive Y1 coil

Command	Function					
PLS	Upper differential output					
Operand	X0~X17	Y0~Y17	M0~M799	T0~159	C0~C79	D0~D399
	–	✓	✓	–	–	–

Explanation

Upper differential output commands. When X0=Off→On (positive edge-triggered), the PLS command will be executed, and M0 will send one pulse, with a pulse length consisting of one scanning period.

Example

Ladder diagram:

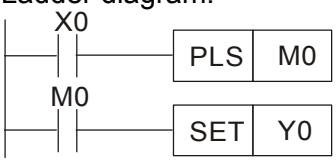

Time sequence diagram:

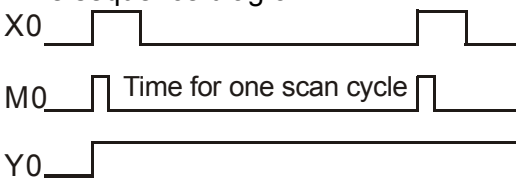

Command code:		Description:
LD	X0	Load Contact a of X0
PLS	**M0**	M0 Upper differential output
LD	M0	Load Contact a of M0
SET	Y0	Y0 Action continues (ON)

Command	Function					
PLF	Lower differential output					
Operand	X0~X17	Y0~Y17	M0~M799	T0~159	C0~C79	D0~D399
	–	✓	✓	–	–	–

Explanation

Lower differential output command. When X0= On→Off (negative edge-triggered), the PLF command will be executed, and M0 will send one pulse, with pulse length consisting of one scanning period.

Example

Ladder diagram:

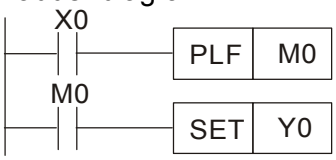

Time sequence diagram:

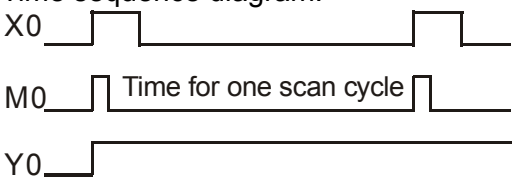

Command code:		Description:
LD	X0	Load Contact a of X0
PLF	**M0**	M0 Lower differential output
LD	M0	Load Contact a of M0
SET	Y0	Y0 Action continues (ON)

Command	Function
END	Program conclusion
Operand	N/A

Explanation

An END command must be added to the end of a ladder diagram program or command program. The PLC will scan from address 0 to the END command, and will return to address 0 and begins scanning again after execution.

Command	Function
NOP	No action
Operand	N/A

Explanation

The command NOP does not perform any operation in the program. Because execution of this command will retain the original logical operation results, it can be used in the following situation: the NOP command can be used instead of a command that is deleted without changing the program length.

Example

Ladder diagram:

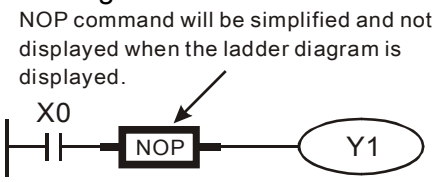

Command code:		Description:
LD	X0	Load Contact b of X0
NOP		No action
OUT	Y1	Drive Y1 coil

Command	Function
INV	Inverse of operation results
Operand	N/A

Explanation

Saves the result of the logic inversion operation prior to the INV command in the cumulative register.

Example

Ladder diagram:

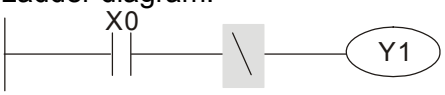

Command code:		Description:
LD	X0	Load Contact a of X0
INV		Inverse of operation results
OUT	Y1	Drive Y1 coil

Command	Function
P	Index
Operand	P0~P255

Explanation

Pointer P is used to subprogram call command API 01 CALL. Use does not require starting from zero, but the number cannot be used repeatedly, otherwise an unpredictable error will occur.

Example

Ladder diagram:

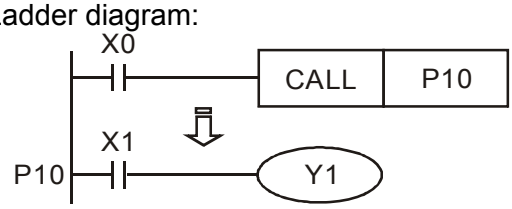

Command code:		Description:
LD	X0	Load Contact a of X0
CALL	P10	Call command CALL to P10
:		
P10		Pointer P10
LD	X1	Load Contact a of X1
OUT	Y1	Drive Y1 coil

16-6-3 Overview of application commands

Classification	API	Command code		P command	Function	STEPS	
		16 bit	32 bit			16bit	32bit
Circuit control	01	CALL	-	✓	Call subprogram	3	-
	2	SRET	-	-	Conclusion of subprogram	1	-
	06	FEND	-	-	Conclusion a main program	1	-
Send comparison	10	CMP	DCMP	✓	Compares set output	7	13
	11	ZCP	DZCP	✓	Range comparison	9	17
	12	MOV	DMOV	✓	Data movement	5	9
	15	BMOV	–	✓	Send all	7	–
Four logical operations	20	ADD	DADD	✓	BIN addition	7	13
	21	SUB	DSUB	✓	BIN subtraction	7	13
	22	MUL	DMUL	✓	BIN multiplication	7	13
	23	DIV	DDIV	✓	BIN division	7	13
	24	INC	DINC	✓	BIN add one	3	5
	25	DEC	DDEC	✓	BIN subtract one	3	5
Rotational displacement	30	ROR	DROR	✓	Right rotation	5	–
	31	ROL	DROL	✓	Left rotation	5	–
Data Process	40	ZRST	–	✓	Clear range	5	-
	49	–	DFLT	✓	BIN whole number → binary floating point number transformation	-	9
communication	150	MODRW	–	✓	MODBUS read/write	7	–
Floating point operation	110	–	DECMP	✓	Comparison of binary floating point numbers	–	13
	111	–	DEZCP	✓	Comparison of binary floating point number range	–	17
	116	–	DRAD	✓	Angle → Diameter	–	9
	117	–	DDEG	✓	Diameter → angle	–	9
	120	–	DEADD	✓	Binary floating point number addition	–	13
	121	–	DESUB	✓	Binary floating point number subtraction	–	13
	122	–	DEMUL	✓	Binary floating point number multiplication	–	13
	123	–	DEDIV	✓	Binary floating point number division	–	13
	124	–	DEXP	✓	Binary floating point number obtain exponent	–	9
	125	–	DLN	✓	Binary floating point number obtain logarithm	–	9
	127	–	DESQR	✓	Binary floating point number find square root	–	9
	129	–	DINT	✓	Binary floating point number → BIN whole number transformation	–	9
	130	–	DSIN	✓	Binary floating point number SIN operation	–	9
	131	–	DCOS	✓	Binary floating point number COS operation	–	9
	132	–	DTAN	✓	Binary floating point number TAN operation	–	9
	133	–	DASIN	✓	Binary floating point number ASIN operation	–	9
	134	–	DACOS	✓	Binary floating point number ACOS operation	–	9

Classification	API	Command code		P command	Function	STEPS	
		16 bit	32 bit			16bit	32bit
	135	–	DATAN	✓	Binary floating point number ATAN operation	–	9
Floating point operation	136	–	DSINH	✓	Binary floating point number SINH operation	–	9
	137	–	DCOSH	✓	Binary floating point number COSH operation	–	9
	138	–	DTANH	✓	Binary floating point number TANH operation	–	9
Calendar	160	TCMP	–	✓	Compare calendar data	11	–
	161	TZCP	–	✓	Compare calendar data range	9	–
	162	TADD	–	✓	Calendar data addition	7	–
	163	TSUB	–	✓	Calendar data subtraction	7	–
	166	TRD	–	✓	Calendar data read	3	–
GRAY code	170	GRY	DGRY	✓	BIN→GRY code transformation	5	9
	171	GBIN	DGBIN	✓	GRY code →BIN transformation	5	9
Contact form logical operation	215	LD&	DLD&	-	Contact form logical operation LD#	5	9
	216	LD|	DLD|	-	Contact form logical operation LD#	5	9
	217	LD^	DLD^	-	Contact form logical operation LD#	5	9
	218	AND&	DAND&	-	Contact form logical operation AND#	5	9
	219	AND|	DAND|	-	Contact form logical operation AND#	5	9
	220	AND^	DAND^	-	Contact form logical operation AND#	5	9
	221	OR&	DOR&	-	Contact form logical operation OR#	5	9
	222	OR|	DOR|	-	Contact form logical operation OR#	5	9
	223	OR^	DOR^	-	Contact form logical operation OR#	5	9
Contact form compare command	224	LD＝	DLD＝	-	Contact form compare LD*	5	9
	225	LD＞	DLD＞	-	Contact form compare LD*	5	9
	226	LD＜	DLD＜	-	Contact form compare LD*	5	9
	228	LD＜＞	DLD＜＞	-	Contact form compare LD*	5	9
	229	LD＜＝	DLD＜＝	-	Contact form compare LD*	5	9
	230	LD＞＝	DLD＞＝	-	Contact form compare LD*	5	9
	232	AND＝	DAND＝	-	Contact form compare AND*	5	9
	233	AND＞	DAND＞	-	Contact form compare AND*	5	9
	234	AND＜	DAND＜	-	Contact form compare AND*	5	9
	236	AND＜＞	DAND＜＞	-	Contact form compare AND*	5	9
	237	AND＜＝	DAND＜＝	-	Contact form compare AND*	5	9
	238	AND＞＝	DAND＞＝	-	Contact form compare AND*	5	9
	240	OR＝	DOR＝	-	Contact form compare OR*	5	9
	241	OR＞	DOR＞	-	Contact form compare OR*	5	9
	242	OR＜	DOR＜	-	Contact form compare OR*	5	9
	244	OR＜＞	DOR＜＞	-	Contact form compare OR*	5	9
	245	OR＜＝	DOR＜＝	-	Contact form compare OR*	5	9
	246	OR＞＝	DOR＞＝	-	Contact form compare OR*	5	9

Classification	API	Command code		P command	Function	STEPS	
		16 bit	32 bit			16bit	32bit
Floating point contact form	275	-	FLD＝	-	Floating point number contact form compare LD*	-	9
	276	-	FLD＞	-	Floating point number contact form compare LD*	-	9
	277	-	FLD＜	-	Floating point number contact form compare LD*	-	9
Compare command	278	-	FLD＜＞	-	Floating point number contact form compare LD*	-	9
	279	-	FLD＜＝	-	Floating point number contact form compare LD*	-	9
	280	-	FLD＞＝	-	Floating point number contact form compare LD*	-	9
	281	-	FAND＝	-	Floating point number contact form compare AND*	-	9
	282	-	FAND＞	-	Floating point number contact form compare AND*	-	9
	283	-	FAND＜	-	Floating point number contact form compare AND*	-	9
	284	-	FAND＜＞	-	Floating point number contact form compare AND*	-	9
	285	-	FAND＜＝	-	Floating point number contact form compare AND*	-	9
	286	-	FAND＞＝	-	Floating point number contact form compare AND*	-	9
	287	-	FOR＝	-	Floating point number contact form compare OR*	-	9
	288	-	FOR＞	-	Floating point number contact form compare OR*	-	9
	289	-	FOR＜	-	Floating point number contact form compare OR*	-	9
	290	-	FOR＜＞	-	Floating point number contact form compare OR*	-	9
	291	-	FOR＜＝	-	Floating point number contact form compare OR*	-	9
	292	-	FOR＞＝	-	Floating point number contact form compare OR*	-	9
Driver special command	139	RPR	–	✓	Read servo parameter	5	–
	140	WPR	–	✓	Write servo parameter	5	–
	141	FPID	–	✓	Driver PID control mode	9	–
	142	FREQ	–	✓	Driver torque control mode	7	–
	262	–	DPOS	✓	Set target	-	5
	263	TORQ	–	✓	Set target torque	5	-
	261	CANRX	–	✓	Read CANopen slave station data	9	-
	264	CANTX	–	✓	Write CANopen slave station data	9	-
	265	CANFLS	–	✓	Refresh special D corresponding to CANopen	3	-
	320	ICOMR	DICOMR	✓	Internal communications read	9	17
	321	ICOMW	DICOMW	✓	Internal communications write	9	17

16-6-4 Detailed explanation of applications commands

API 01		**CALL**	**P**	(S)	Call subprogram

Bit device			Word device							
X	Y	M	K	H	KnX	KnY	KnM	T	C	D

Notes on operand usage:
The S operand can designate P
C2000 series device: The S operand can designate P0-P63

16-bit command (3 STEP)			
CALL	Continuous execution type	CALLP	Pulse execution type
32-bit command			
—	—	—	—

Flag signal: none

Explanation

- **S**：Call subprogram pointer.
- Write the subprogram after the FEND command.
- The subprogram must end after the SRET command.
- Refer to the FEND command explanation and sample content for detailed command functions.

API 02		**SRET**	**P**	–	Conclusion of subprogram

Bit device			Word device							
X	Y	M	K	H	KnX	KnY	KnM	T	C	D

Notes on operand usage:
No operand
A contact-driven command is not needed

16-bit command (1 STEP)			
FEND	Continuous execution type	—	—
32-bit command			
—	—	—	—

Flag signal: none

Explanation

- A contact-driven command is not needed. Automatically returns next command after CALL command
- Indicates end of subprogram. After end of subprogram, SRET returns to main program, and executes next command after the original call subprogram CALL command.
- Refer to the FEND command explanation and sample content for detailed command functions.

API 06	**FEND**	–	Conclusion a main program

	Bit device			Word device							
	X	Y	M	K	H	KnX	KnY	KnM	T	C	D

Notes on operand usage:
No operand
A contact-driven command is not needed

16-bit command (1 STEP)

FEND	Continuous execution type	–	–

32-bit command

–	–	–	–

Flag signal: none

Explanation

- This command indicates the end of the main program. It is the same as the END command when the PLC executes this command.
- The CALL command program must be written after the FEND command, and the SRET command added to the end of the subprogram.
- When using the FEND command, an END command is also needed. However, the END command must be placed at the end, after the main program and subprogram.

CALL command process

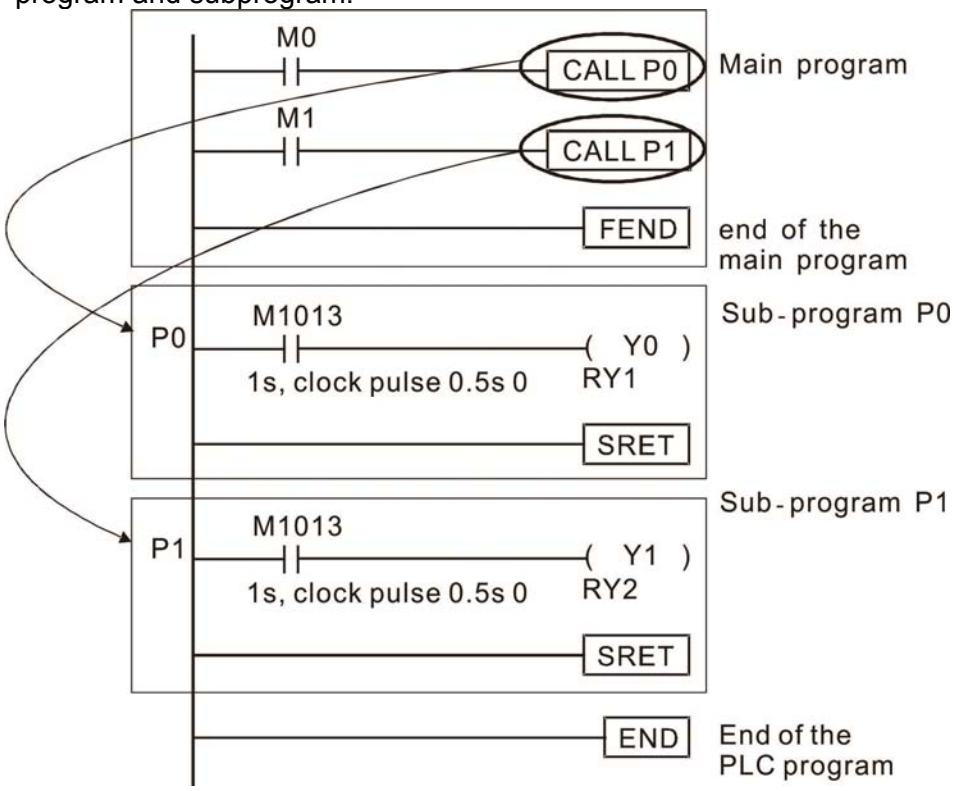

API 10	D	**CMP**	P	(S1) (S2) (D)	Compares set output

	Bit device			Word device							
	X	Y	M	K	H	KnX	KnY	KnM	T	C	D
S1				*	*	*	*	*	*	*	*
S2				*	*	*	*	*	*	*	*
D		*	*								

Notes on operand usage:
The operand D occupies three consecutive points

16-bit command (7 STEP)

CMP	Continuous execution type	CMPP	Pulse execution type

32-bit command (13 STEP)

DCMP	Continuous execution type	DCMPP	Pulse execution type

Flag signal: none

Explanation

- (S1): Compare value 1. (S2): Compare value 2. (D): Results of comparison.
- Compares the size of the content of operand (S1) and (S2); the results of comparison are expressed in (D).
- Size comparison is performed algebraically. All data is compared in the form of numerical binary values. Because this is a 16-bit command, when b15 is 1, this indicates a negative number.

Example

- When the designated device is Y0, it automatically occupies Y0, Y1 and Y2.
- When X10=On, the CMP command executes, and Y0, Y1 or Y2 will be On. When X10=Off, the CMP command will not execute, and the state of Y0, Y1 and Y2 will remain in the state prior to X10=Off.
- If ≥, ≤, or ≠ results are needed, they can be obtained via series/parallel connections of Y0-Y2.

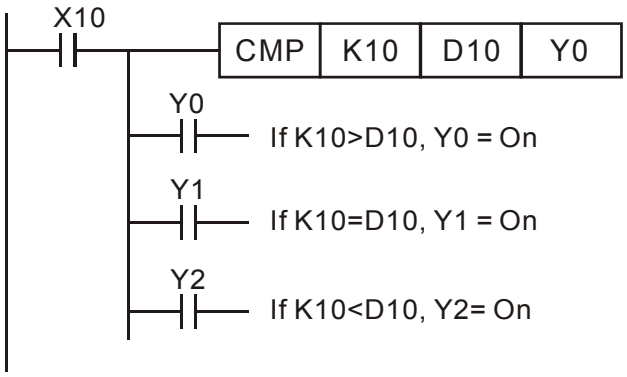

- To clear results of comparison, use the RST or ZRST command.

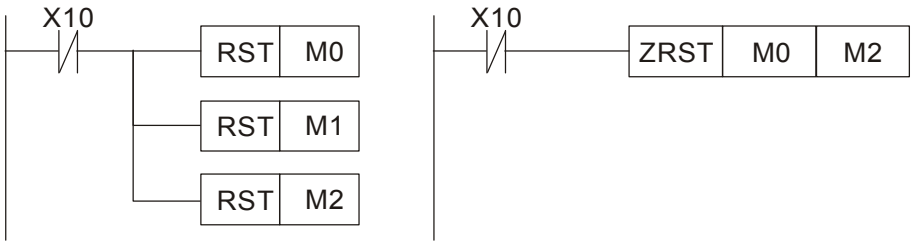

API 11	D	**ZCP**	P	(S1) (S2) (S) (D)	Range comparison

	Bit device			Word device							
	X	Y	M	K	H	KnX	KnY	KnM	T	C	D
S1				*	*	*	*	*	*	*	*
S2				*	*	*	*	*	*	*	*
S				*	*	*	*	*	*	*	*
D		*	*								

Notes on operand usage:
The content value of operand S1 is less than the content value of S2 operand
The operand D occupies three consecutive points

16-bit command (9 STEP)

ZCP	Continuous execution type	ZCPP	Pulse execution type

32-bit command (17 STEP)

DZCP	Continuous execution type	DZCPP	Pulse execution type

Flag signal: none

Explanation

- (S1): Lower limit of range comparison. (S2): Upper limit of range comparison. (S) : Comparative value. (D): Results of comparison.
- When the comparative value (S) is compared with the lower limit (S1) and upper limit (S2), the results of comparison are expressed in (D).
- When lower limit (S1) > upper limit (S2), the command will use the lower limit (S1) to perform comparison with the upper and lower limit.
- Size comparison is performed algebraically. All data is compared in the form of numerical binary values. Because this is a 16-bit command, when b15 is 1, this indicates a negative number.

Example

- When the designated device is M0, it automatically occupies M0, M1 and M2.
- When X0=On, the ZCP command executes, and M0, M1 or M2 will be On. When X0=Off, the ZCP command will not execute, and the state of M0, M1 or M2 will remain in the state prior to X0=Off.
- If ≥, ≤, or ≠ results are needed, they can be obtained via series/parallel connections of M0-M2.

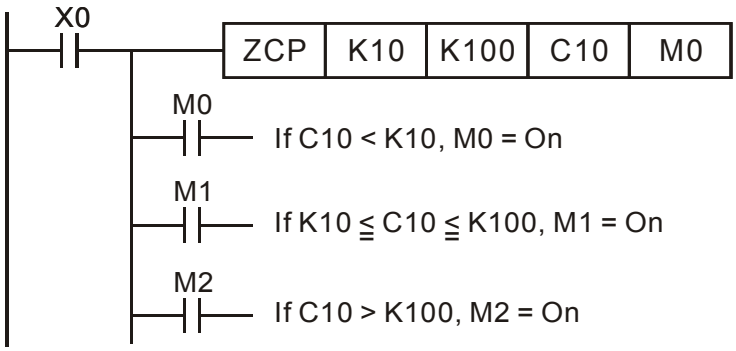

- To clear results of comparison, use the RST or ZRST command.

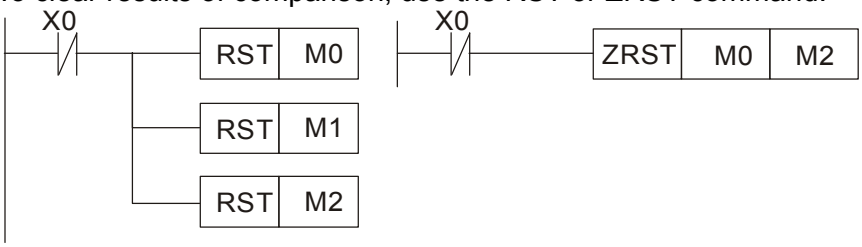

API 12	D	**MOV**	P	(S) (D)	Data movement

	Bit device			Word device							
	X	Y	M	K	H	KnX	KnY	KnM	T	C	D
S				*	*	*	*	*	*	*	*
D							*	*	*	*	*

Notes on operand usage: none

16-bit command (5 STEP)

MOV	Continuous execution type	MOVP	Pulse execution type

32-bit command (9 STEP)

DMOV	Continuous execution type	DMOVP	Pulse execution type

Flag signal:

Explanation

- (S): Data source. (D): Destination of data movement.
- When this command is executed, the content of (S) content will be directly moved to (D). When the command is not executed, the content of (D) will not change.

Example

- When X0=Off, the content of D10 will not change; if X0=On, the value K10 will be sent to data register D10.
- When X1=Off, the content of D10 will not change; if X1=On, the current value of T0 will be sent to data register D10.

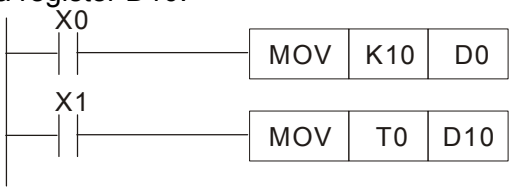

API 15	BMOV	P	(S) (D) (n)	Send all

	Bit device			Word device							
	X	Y	M	K	H	KnX	KnY	KnM	T	C	D
S						*	*	*	*	*	*
D							*	*	*	*	*
n				*	*				*	*	

Notes on operand usage:
n operand scope n = 1 to 512

16-bit command (7 STEP)			
BMOV	Continuous execution type	BMOVP	Pulse execution type
32-bit command			
–	–	–	–

Flag signal: none

Explanation

- (S): Initiate source device. (D): Initiate destination device. (n): Send block length.
- The content of n registers starting from the initial number of the device designated by (S) will be sent to the n registers starting from the initial number of the device designated by (n); if the number of points referred to by n exceeds the range used by that device, only points within the valid range will be sent.

Example 1

- When X10=On, the content of registers D0-D3 will be sent to the four registers D20 to D23.

Example 2

- If the designated bit devices KnX, KnY, and KnM are sent, (S) and (D) must have the same number of nibbles, which implies that n must be identical.

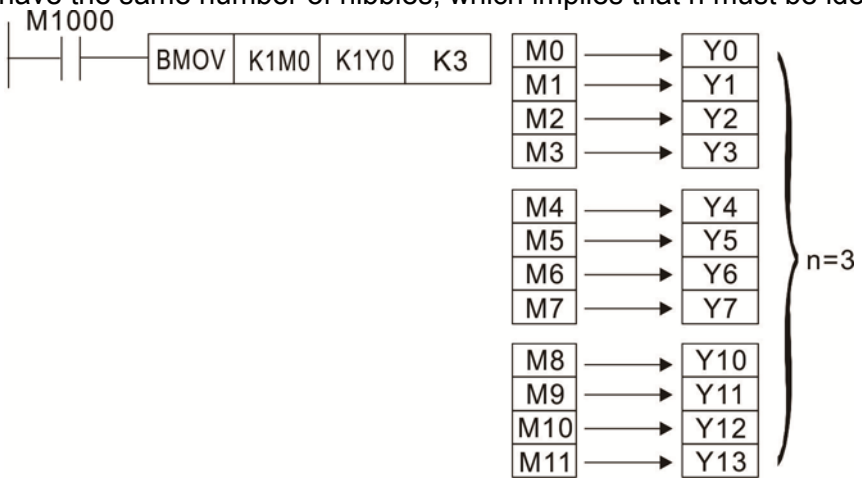

Example 3

- In order to prevent overlap between the transmission addresses of two operands, which would cause confusion, make sure that the addresses designated by the two operands have different sizes, as shown below:

When (S) > (D), send in the order ①→② →③.

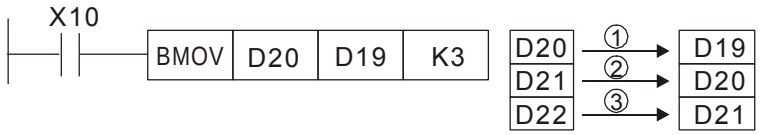

When (S) < (D), send in the order ③→② →①.

API 20	D	**ADD**	P	(S1) (S2) (D)	BIN addition

	Bit device			Word device							
	X	Y	M	K	H	KnX	KnY	KnM	T	C	D
S1				*	*	*	*	*	*	*	*
S2				*	*	*	*	*	*	*	*
D							*	*	*	*	*

Notes on operand usage: none

16-bit command (7 STEP)

ADD	Continuous execution type	ADDP	Pulse execution type

32-bit command (13 STEP)

DADD	Continuous execution type	DADDP	Pulse execution type

Flag signal: M1020 Zero flag
M1021 Borrow flag
M1022 Carry flag
Please refer to the following supplementary explanation

Explanation

- (S1): Augend. (S2): Addend. (D): Sum.
- Using two data sources: The result of adding (S1) and (S2) using the BIN method will be stored in (D).
- The highest bit of any data is symbolized as bit 0 indicating (positive) 1 indicating (negative), enabling the use of algebraic addition operations. (for instance: 3+(-9)=-6)
- Flag changes connected with the addition.

1. When calculation results are 0, the zero flag M1020 will be On.
2. When calculation results are less than –32,768, the borrow flag M1021 will be On.
3. When calculation results are greater than 32,767, the carry flag M1022 will be On.

Example

- 16-bit BIN addition: When X0=On, the result of the content of addend D0 plus the content of augend D10 will exist in the content of D20.

Remark

- Relationship between flag actions and negative/positive numbers:

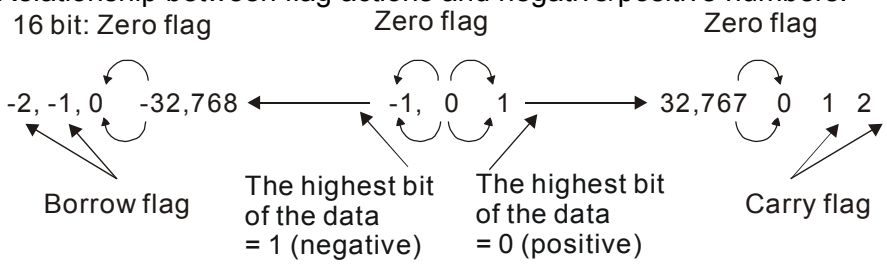

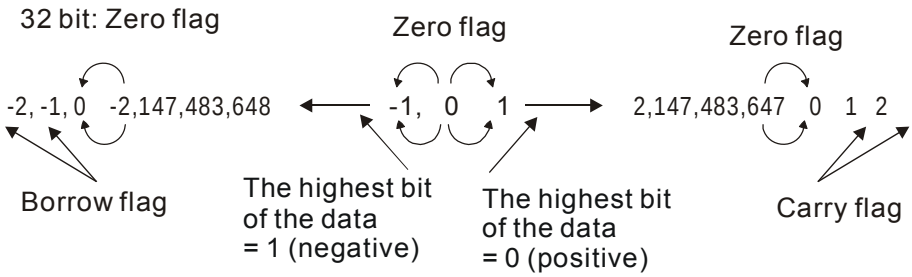

API 21	D	**SUB**	P	(S1) (S2) (D)	BIN subtraction

	Bit device			Word device							
	X	Y	M	K	H	KnX	KnY	KnM	T	C	D
S1				*	*	*	*	*	*	*	*
S2				*	*	*	*	*	*	*	*
D							*	*	*	*	*

Notes on operand usage: none

16-bit command (7 STEP)

SUB	Continuous execution type	SUBP	Pulse execution type

32-bit command (13 STEP)

DSUB	Continuous execution type	DSUBP	Pulse execution type

Flag signal: M1020 Zero flag
M1021 Borrow flag
M1022 Carry flag
Please refer to the following supplementary explanation

Explanation

- (S1): Minuend. (S2): Subtrahend. (D): Difference.
- Using two data sources: The result of subtraction of (S1) and (S2) using the BIN method is stored in (D).
- The highest bit of any data is symbolized as bit 0 indicating (positive) 1 indicating (negative), enabling the use of algebraic subtraction operations.
- Flag changes connected with subtraction.

1. When calculation results are 0, the zero flag M1020 will be On.
2. When calculation results are less than –32,768, the borrow flag M1021 will be On.
3. When calculation results are greater than 32,767, the carry flag M1022 will be On.

Example

- 16-bit BIN subtraction: When X0=On, the content of D10 is subtracted from the content of D0, and the difference is stored in D20.

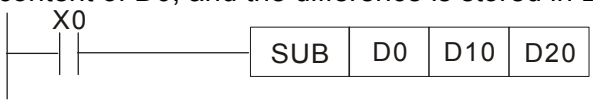

API 22	D	**MUL**	P	(S1) (S2) (D)	BIN multiplication

	Bit device			Word device							
	X	Y	M	K	H	KnX	KnY	KnM	T	C	D
S1				*	*	*	*	*	*	*	*
S2				*	*	*	*	*	*	*	*
D							*	*	*	*	*

Notes on operand usage:
The 16-bit command operand D will occupy 2 consecutive points

16-bit command (7 STEP)

MUL	Continuous execution type	MULP	Pulse execution type

32-bit command (13 STEP)

DMUL	Continuous execution type	DMULP	Pulse execution type

Flag signal: none

Explanation

- (S1): Multiplicand. (S2): Multiplier. (D): Product.
- Using two data sources: When (S1) and (S2) are multiplied using the BIN method, the product is stored in (D).

16-bit BIN multiplication operation:

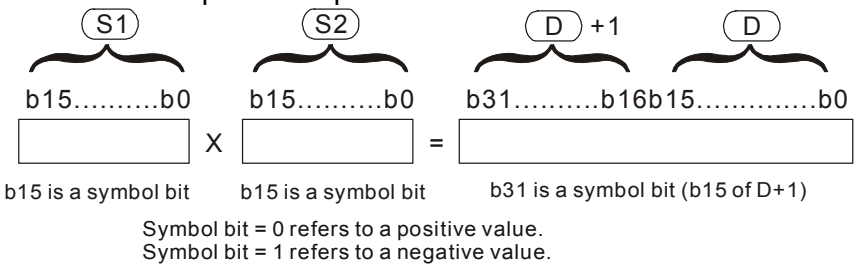

Symbol bit = 0 refers to a positive value.
Symbol bit = 1 refers to a negative value.

When (D) is a bit device, K1-K4 can be designated as a hexadecimal number, which will occupy 2 consecutive units.

Example

- When 16-bit DO is multiplied by 16-bit D10, the result will be a 32-bit product; the upper 16 bits will be stored in D21, and the lower 16 bits will be stored in D20. Whether the bit at the farthest left is Off or On will indicate the sign of the result.

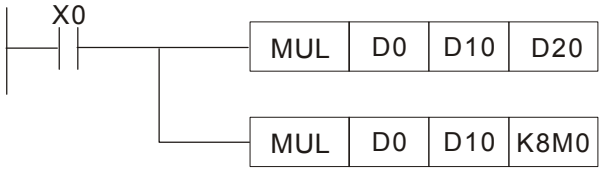

API 23	D	**DIV**	P	(S1) (S2) (D)	BIN division

	Bit device			Word device							
	X	Y	M	K	H	KnX	KnY	KnM	T	C	D
S1				*	*	*	*	*	*	*	*
S2				*	*	*	*	*	*	*	*
D							*	*	*	*	*

Notes on operand usage:
The 16-bit command operand D will occupy 2 consecutive points

16-bit command (7 STEP)			
DIV	Continuous execution type	DIVP	Pulse execution type

32-bit command (13 STEP)			
DDIV	Continuous execution type	DDIVP	Pulse execution type

Flag signal: none

Explanation

- (S1): Dividend. (S2): Divisor. (D): Quotient and remainder.
- Using two data sources: The quotient and remainder will be stored in (D) when (S1) and (S2) are subjected to division using the BIN method. The sign bit for (S1), (S2) and (D) must be kept in mind when performing a 16-bit operation.

16-bit BIN division:

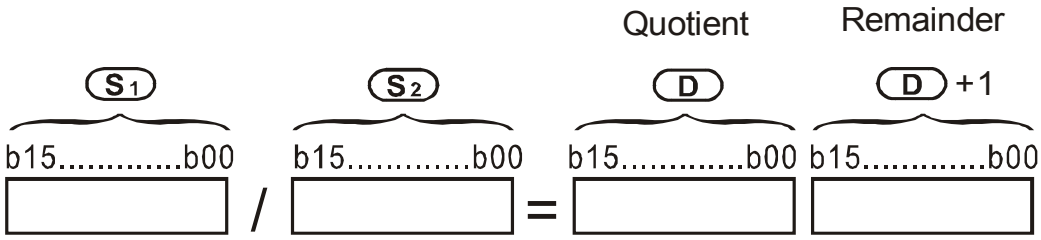

If (D) is a bit device, K1-K4 can be designated 16 bits, which will occupy 2 consecutive units and yield the quotient and remainder.

Example

- When X0=On, the quotient resulting from division of dividend D0 by divisor D10 will be placed in D20, and the remainder will be placed in D21. Whether the highest bit is Off or On will indicate the sign of the result.

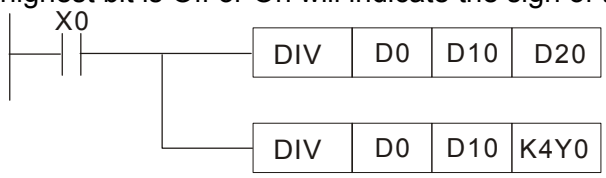

API 24	D	**INC**	P	(D)	BIN add one

	Bit device			Word device							
	X	Y	M	K	H	KnX	KnY	KnM	T	C	D
D							*	*	*	*	*

Notes on operand usage: none

16-bit command (3 STEP)

INC	Continuous execution type	INCP	Pulse execution type

32-bit command (5 STEP)

DINC	Continuous execution type	DINCP	Pulse execution type

Flag signal: none

Explanation

- (D): Destination device.
- If a command is not the pulse execution type, when the command is executed, the program will add 1 to the content of device (D) for each scanning cycle.
- This command is ordinarily used as a pulse execution type command (INCP).
- During 16-bit operation, 32,767 +1 will change the value to -32,768. During 32 bit operation, 2,147,483,647 +1 will change the value to -2,147,483,648.

Example

- When X0=Off→On, 1 is automatically added to the content of D0.

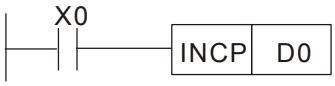

API 25	D	**DEC**	P	(D)	BIN subtract one

	Bit device			Word device							
	X	Y	M	K	H	KnX	KnY	KnM	T	C	D
D				*	*	*	*	*			

Notes on operand usage: none

16-bit command (3 STEP)

DEC	Continuous execution type	DECP	Pulse execution type

32-bit command (5 STEP)

DDEC	Continuous execution type	DDECP	Pulse execution type

Flag signal: none

Explanation

- (D): Destination device.
- If a command is not the pulse execution type, when the command is executed, the program will add 1 to the content of device (D) for each scanning cycle.
- This command is ordinarily used as a pulse execution type command (DECP).
- During 16-bit operation, -32,768 -1 will change the value to 32,767. During 32 bit operation, -2,147,483,648 -1 will change the value to -2,147,483,647.

Example

- When X0=Off→On, 1 is automatically subtracted from the content of D0.

API 30	D	**ROR**	P	(D) (n)	Right rotation

	Bit device			Word device							
	X	Y	M	K	H	KnX	KnY	KnM	T	C	D
D							*	*	*	*	*
n				*	*						

Notes on operand usage:
Only K4 (16-bit) will be valid if the operand D is designated as KnY or KnM.
n operand n=K1-K16 (16-bit)

16-bit command (5 STEP)

ROR	Continuous execution type	RORP	Pulse execution type

32-bit command (9 STEP)

DROR	Continuous execution type	DRORP	Pulse execution type

Flag signal: M1022 Carry flag

Explanation

- (D): Device to be rotated. (n): Number of bits for one rotation.
- Rotates the device designated by (D) to the right (n) bits.
- This command is ordinarily used as a pulse execution type command (RORP).

Example

- When X0=Off→On, 4 of the 16 bits in D10 specify a right rotation; the content of the bit indicated with * (see figure below) will be sent to the carry flag signal M1022.

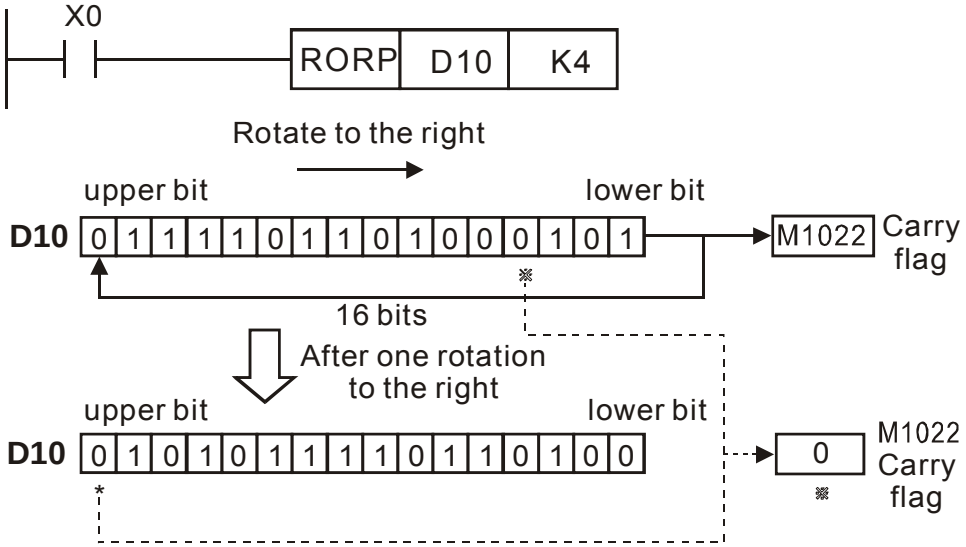

API 31	D	**ROL**	P	(D) (n)	Left rotation

	Bit device			Word device							
	X	Y	M	K	H	KnX	KnY	KnM	T	C	D
D							*	*	*	*	*
n				*	*						

Notes on operand usage:
Only K4 (16-bit) will be valid if the operand D is designated as KnY or KnM.
n operand n=1 to 16 (16-bit)

16-bit command (5 STEP)

ROL	Continuous execution type	ROLP	Pulse execution type

32-bit command (9 STEP)

DROL	Continuous execution type	DROLP	Pulse execution type

Flag signal: M1022 Carry flag

Explanation

- (D): Device to be rotated. (n): Number of bits for one rotation.
- Rotates the device designated by (D) to the left (n) bits.
- This command is ordinarily used as a pulse execution type command (ROLP).

Example

- When X0=Off→On, 4 of the 16 bits in D10 specify a left rotation; the content of the bit indicated with * (see figure below) will be sent to the carry flag signal M1022.

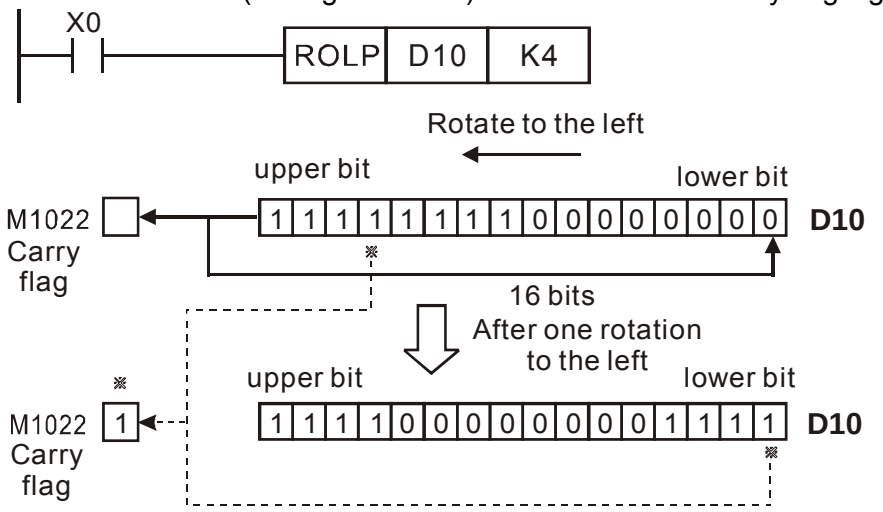

API 40		**ZRST**	**P**	(D1) (D2)	Clear range

	Bit device			Word device							
	X	Y	M	K	H	KnX	KnY	KnM	T	C	D
D1		∗	∗						∗	∗	∗
D2		∗	∗						∗	∗	∗

Notes on operand usage:
Number of operand D_1 operand ≤ number of operand D_2
Operands D_1, D_2 must designate the same type of device
Please refer to the function specifications table for each device in series for the scope of device usage

16-bit command (5 STEP)

ZRST	Continuous execution type	ZRSTP	Pulse execution type

32-bit command

—	—	—	—

Flag signal: none

Explanation

- **D_1**: Clear range's initial device. **D_2**: Clear range's final device.
- When the number of operand D_1 > number of operand D_2, only the operand designated by D_2 will be cleared.

Example

- When X0 is On, auxiliary relays M300 - M399 will be cleared and changed to Off.
- When X1 is On, 16-bit counters C0 - C127 will all be cleared. (Writes 0, and clears and changes contact and coil to Off).
- When X10 is On, timer T0 - T127 will all be cleared. (Writes 0, and clears and changes contact and coil to Off).
- When X3 is On, the data in data registers D0 - D100 will be cleared and set as 0.

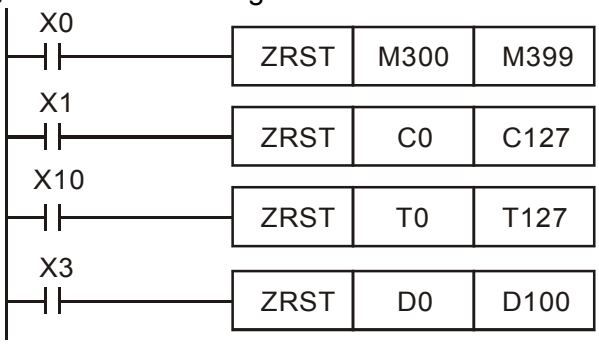

Remark

- Devices can independently use the clear command (RST), such as bit device Y, M and word device T, C, D.

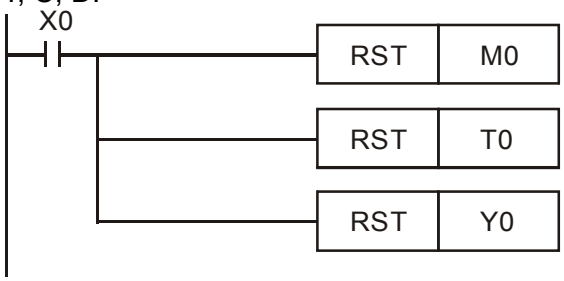

API 49	D	FLT	P	(S) (D)	BIN whole number → binary decimal transformation

	Bit device			Word device							
	X	Y	M	K	H	KnX	KnY	KnM	T	C	D
S		*	*						*	*	*
D		*	*						*	*	*

Notes on operand usage: Please refer to the function specifications table for each device in series for the scope of device usage
The operand D will occupy 2 consecutive points

16-bit command

–	–	–	–

32-bit command (9steps)

DFLT	Continuous execution type	DFLTP	Pulse execution type

Flag signal: none

Explanation

- **S**: Transformation source device. **D**: Device storing transformation results.
- Transforms BIN whole number into a binary decimal value.

Example

- When X11 is On, converts the whole number of values corresponding to D0 and D1 into floating point numbers, which are placed in D20 and D21.

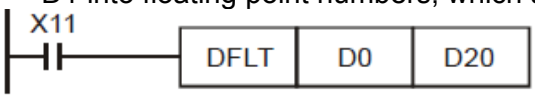

API 150	MODRW P	S1 S2 S3 S n	MODBUS data read/write

	Bit device			Word device							
	X	Y	M	K	H	KnX	KnY	KnM	T	C	D
S1				*	*						*
S2				*	*						*
S3				*	*						*
S											*
n				*	*						*

16-bit command (5 STEP)			
MODRW	Continuous execution type	MODRW P	Pulse execution type
32-bit command			
—	—	—	—

Flag signal: M1077 M1078 M1079

Explanation

- S1: online device address. S2: communications function code. S3: address of data to read/write. S: register for data to be read/written is stored. N: length of data to be read/written.
- COM1 must be defined as controlled by the PLC (set P9-31 = -12) before using this command, and the corresponding communications speed and format must also be set (set P09-01 and P09-04). S2: communications function code. Currently only supports the following function code; the remaining function code cannot be executed.

Function	Description
H 02	Input read
H 03	Read word
H 06	Write single word
H 0F	Write multiple coils
H10	Write single word

- After executing this command, M1077, M1078 and M1079 will be immediately changed to 0.

- As an example, when C2000 must control another converter and PLC, if the converter has a station number of 10 and the PLC has a station number of 20, see the following example:

Control slave device converter

Serial No.	Example	MODRW command				
		S1	S2	S3	S4	n
		Node ID	Function code	Address	Register	Length:
1	Reads 4 sets of data comprising the converter slave device parameters P01-00 to P01-03, and saves the read data in D0 to D3	K10	H3	H100	D0	K4
2	Reads 3 sets of data comprising the converter slave device addresses H2100 to H2102, and saves the read data in D5 to D7	K10	H3	H2100	D5	K3
3	Reads 3 sets of data comprising the converter slave device parameters P05-00 to P05-03, and writes the values as D10 to D12	K10	H10	H500	D10	K3
4	Writes 2 sets of data comprising the converter slave device addresses H2000 to H2001, and writes the values as D15 to D16	K10	H10	H2000	D15	K2

PLC controlling slave device

Serial No.	Example	MODRW command				
		S1	S2	S3	S4	n
		Node ID	Function code	Address	Register	Length:
1	Reads 4 sets of data comprising the PLC slave device's X0 to X3 state, and saves the read data in bits 0 to 3 of D0	K20	H2	H400	D0	K4
2	Reads 4 sets of data comprising the PLC slave device's Y0 to Y3 state, and saves the read data in bits 0 to 3 of D1	K20	H2	H500	D1	K4
3	Reads 4 sets of data comprising the PLC slave device's M0 to M3 state, and saves the read data in bits 0 to 3 of D2	K20	H2	H800	D2	K4
4	Reads 4 sets of data comprising the PLC slave device's T0 to T3 state, and saves the read data in bits 0 to 3 of D3	K20	H2	H600	D3	K4
5	Reads 4 sets of data comprising the PLC slave device's C0 to C3 state, and saves the read data in bits 0 to 3 of D4	K20	H2	HE00	D4	K4
6	Reads 4 sets of data comprising the PLC slave device's T0 to T3 count value, and saves the read data of D10 to D13	K20	H3	H600	D10	K4
7	Reads 4 sets of data comprising the PLC slave device's C0 to C3 count value, and saves the read data of D20 to D23	K20	H3	HE00	D20	K4
8	Reads 4 sets of data comprising the PLC slave device's D0 to D3 count value, and saves the read data of D30 to D33	K20	H3	H1000	D30	K4
9	Writes 4 sets of the PLC slave device's Y0 to Y3 state, and writes the values as bits 0 to 3 of D1	K20	HF	H500	D1	K4
10	Writes 4 sets of the PLC slave device's M0 to M3 state, and writes the values as bits 0 to 3 of D2	K20	HF	H800	D2	K4
11	Writes 4 sets of the PLC slave device's T0 to T3 state, and writes the values as bits 0 to 3 of D3	K20	HF	H600	D3	K4
12	Writes 4 sets of the PLC slave device's C0 to C3 state, and writes the values as bits 0 to 3 of D4	K20	HF	HE00	D4	K4
13	Writes 4 sets of the PLC slave device's T0 to T3 state, and writes the values of D10 to D13	K20	H10	H600	D10	K4
14	Writes 4 sets of the PLC slave device's C0 to C3 state, and writes the values of D20 to D23	K20	H10	HE00	D20	K4
15	Writes 4 sets of the PLC slave device's D0 to D3 state, and writes the values of D30 to D33	K20	H10	H1000	D30	K4

Example

- Will trigger M0 On when the PLC begins to operate, and sends instruction to execute one MODRW command.
- After receiving the slave device's response, if the command is correct, it will execute one ROL command, which will cause M1 to be On.
- After receiving the slave device's response, will trigger M50 = 1 after a delay of 10 PLC scanning cycles, and then execute one MODRW command.
- After again receiving the slave device's response, if the command is correct, it will execute one ROL command, and M2 will change to On at this time (and M2 can be defined as a repeat of M); K4M0 will change to K1, and only M0 will remain 1. Transmission can proceed in a continuous cycle. If you wish to add a command, merely add the desired command in the empty frame, and change repeat M to Mn+1.

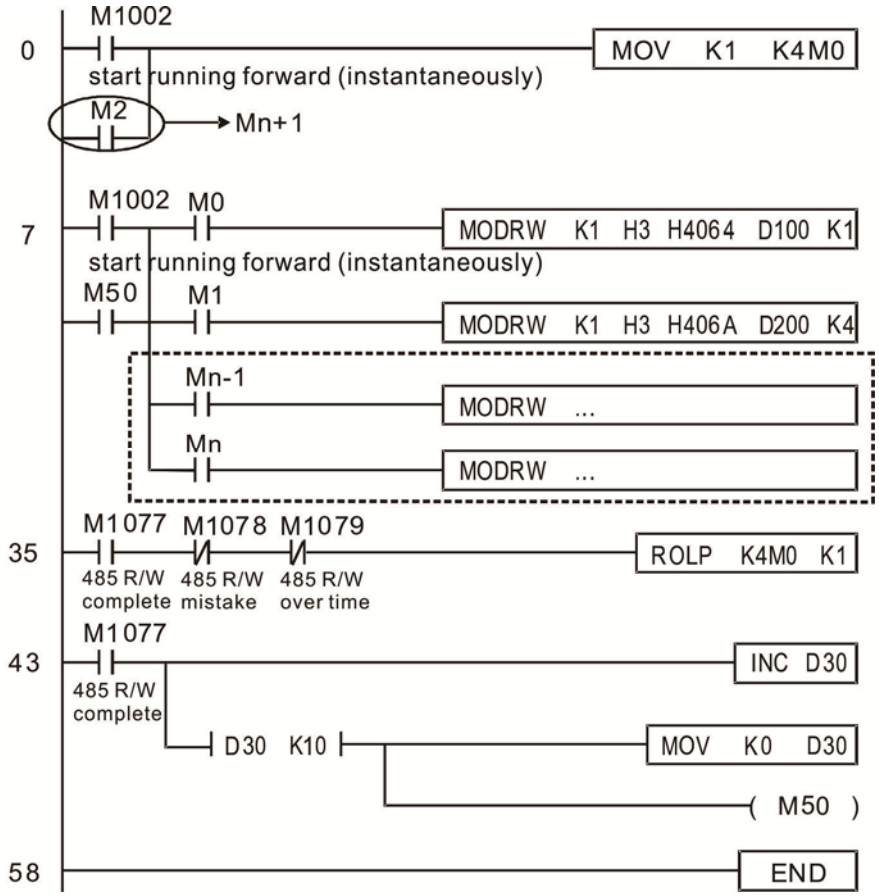

API 110	D	**ECMP**	P	S1 S2 D	Comparison of binary floating point numbers

	Bit device			Word device							
	X	Y	M	K	H	KnX	KnY	KnM	T	C	D
S1				*	*						*
S2				*	*						*
D				*	*						*

Notes on operand usage:
The operand D occupies three consecutive points
Please refer to the function specifications table for each device in series for the scope of device usage

16-bit command

—	—	—	—

32-bit command (13 STEP)

DECMP	Continuous execution type	DECMPP	Pulse execution type

Flag signal: none

Explanation

- **S_1**: Comparison of binary floating point numbers value 1. **S_2**: Comparison of binary floating point numbers value 2. **D**: Results of comparison, occupies 3 consecutive points.
- When binary floating point number 1 is compared with comparative binary floating point number 2, the result of comparison (>, =, <) will be expressed in **D**.
- **If the source operand S_1** or **S_2** designates a constant K or H, the command will transform the constant to a binary floating-point number for the purpose of comparison.

Example

- When the designated device is M10, it will automatically occupy M10-M12.
- When X0=On, the DECMP command executes, and one of M10-M12 will be On. When X0=Off, the DECMP command will not execute, and M10-M12 will remain in the X0=Off state.
- If results in the form of ≥, ≤, or ≠ are needed, they can be obtained by series and parallel connection of M10-M12.
- Please use the RST or ZRST command to clear the result.

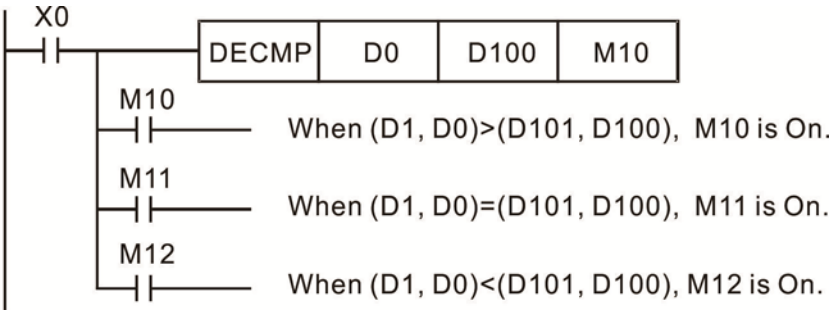

API 111	D	**EZCP**	P	S_1 S_2 S D	Comparison of binary floating point number range

	Bit device			Word device							
	X	Y	M	K	H	KnX	KnY	KnM	T	C	D
S1				*	*						*
S2				*	*						*
S				*	*						*
D		*	*								

Notes on operand usage:
The operand D occupies three consecutive points
Please refer to the function specifications table for each device in series for the scope of device usage

16-bit command

—	—	—	—

32-bit command (17 STEP)

DEZCP	Continuous execution type	DEZCPP	Pulse execution type

Flag signal: none

Explanation

- **S_1**: Lower limit of binary floating point number in range comparison. **S_2**: Upper limit of binary floating point number in range comparison. **S**: Comparison of binary floating point numerical values. **D**: Results of comparison, occupies 3 consecutive points.
- Comparison of binary floating point numerical value **S** with binary floating point number lower limit value **S_1** and binary floating point number upper limit value **S_2**; the results of comparison are expressed in **D**.
- **If the source operand S_1** or **S_2** designates a constant K or H, the command will transform the constant to a binary floating-point number for the purpose of comparison.
- When the lower limit binary floating point number **S_1** is greater than the upper limit binary floating point number **S_2**, a command will be issued to perform comparison with the upper and lower limits using the binary floating point number lower limit value **S_1**.

Example

- When the designated device is M0, it will automatically occupy M0- M2.
- When X0=On, the DEZCP command will be executed, and one of M0-M2 will be On. When X0=Off, the EZCP command will not execute, and M0-M2 will continue in the X0=Off state.
- Please use the RST or ZRST command to clear the result.

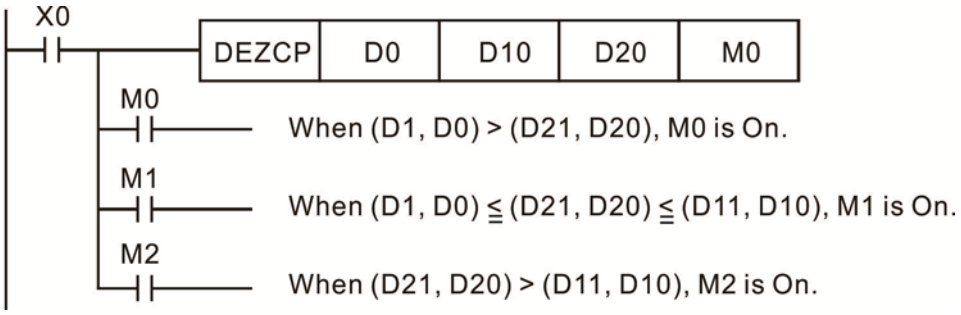

API 116	D	**RAD**	P	(S) (D)	Angle → Diameter

	Bit device			Word device							
	X	Y	M	K	H	KnX	KnY	KnM	T	C	D
S				*	*						*
D											*

Notes on operand usage:
Please refer to the function specifications table for each device in series for the scope of device usage

16-bit command

—	—	—	—

32-bit command (9 STEP)

DRAD	Continuous execution type	DRADP	脈波執行型

Flag signal: none

Explanation

- **S**: data source (angle). **D**: result of transformation (diameter).
- Uses the following formula to convert angles to radians.
- Diameter ＝Angle × (π/180)

Example

- When X0=On, the angle of the designated binary floating point number (D1, D0) will be converted to radians and stored in (D11, D10), with the content consisting of a binary floating point number.

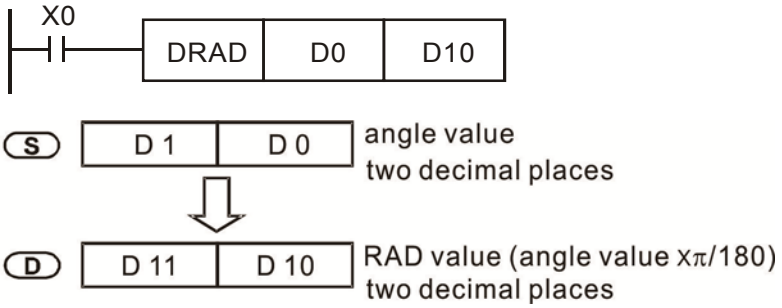

API 117	D	**DEG**	P	(S) (D)	Diameter → angle

	Bit device			Word device							
	X	Y	M	K	H	KnX	KnY	KnM	T	C	D
S				*	*						*
D											*

Notes on operand usage:
Please refer to the function specifications table for each device in series for the scope of device usage

16-bit command

—	—	—	—

32-bit command (9 STEP)

DDEG	Continuous execution type	DDEGP	Pulse execution type

Flag signal: none

Explanation

- **S**: data source (diameter). **D**: results of transformation (angle).
- Uses the following formula to convert radians to an angle.
- Angle ＝Diameter × (180/π)

Example

- When X0=On, angle of the designated binary floating point number (D1, D0) in radians will be converted to an angle and stored in (D11, D10), with the content consisting of a binary floating point number.

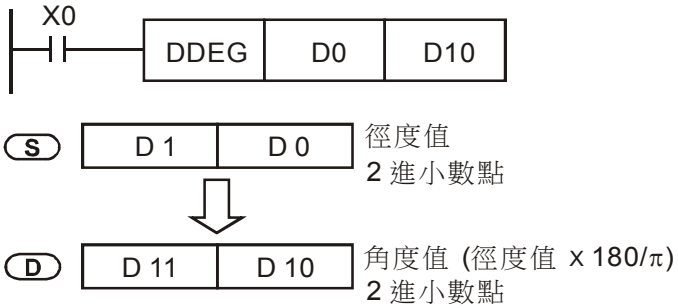

API 120	D	**EADD**	P	S_1 S_2 D	Adding binary floating point numbers

	Bit device			Word device							
	X	Y	M	K	H	KnX	KnY	KnM	T	C	D
S1				*	*						*
S2				*	*						*
D											*

Notes on operand usage:
Please refer to the function specifications table for each device in series for the scope of device usage

16-bit command			
—	—	—	—

32-bit command (9 STEP)			
DEADD	Continuous execution type	DEADDP	Pulse execution type

Flag signal: none

Explanation

- **S_1**: addend. **S_2**: augend. **D**: sum.
- When the content of the register designated by **S_2** is added to the content of the register designated by **S_1**, and the result is stored in the register designated by **D**. Addition is performed entirely using binary floating-point numbers.
- **If the source operand S_1** or **S_2** designates a constant K or H, the command will transform that constant into a binary floating point number for use in addition.
- **In the situation when S_1** and **S_2** designate identical register numbers, if a "continuous execution" command is employed, when conditional contact is On, the register will perform addition once during each scan. Pulse execution type commands (DEADDP) are generally used under ordinary circumstances.

Example

- When X0=On, a binary floating point number (D1, D0) will be added to a binary floating point number (D3, D2), and the results stored in (D11, D10).

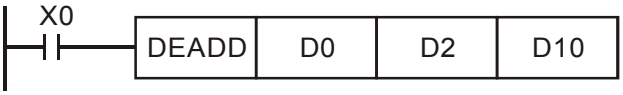

- When X2 =On, a binary floating point number (D11, D10) will be added to K1234 (which has been automatically converted to a binary floating-point number), and the results stored in (D21, D20).

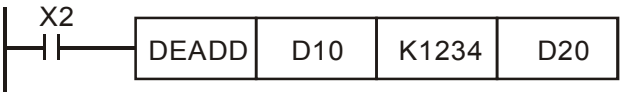

API 121	D	**ESUB**	P	S1 S2 D	Subtraction of binary floating point numbers

	Bit device			Word device							
	X	Y	M	K	H	KnX	KnY	KnM	T	C	D
S1				*	*						*
S2				*	*						*
D											*

Notes on operand usage:
Please refer to the function specifications table for each device in series for the scope of device usage

16-bit command			
—	—	—	—

32-bit command (13 STEP)			
DESUB	Continuous execution type	DESUBP	Pulse execution type

Flag signal: none

Explanation

- **S_1**: minuend. **S_2**: subtrahend. **D**: difference.
- When the content of the register designated by **S_2** is subtracted from the content of the register designated by **S_1**, the difference will be stored in the register designated by **D**; subtraction is performed entirely using binary floating-point numbers.
- **If the source operand S_1** or **S_2** designates a constant K or H, the command will transform that constant into a binary floating point number for use in subtraction.
- **In the situation when S_1** and **S_2** designate identical register numbers, if a "continuous execution" command is employed, when conditional contact is On, the register will perform addition once during each scan. Pulse execution type commands (DESUBP) are generally used under ordinary circumstances.

Example

- When X0=On, a binary floating point number (D1, D0) will be subtracted to a binary floating point number (D3, D2), and the results stored in (D11, D10).

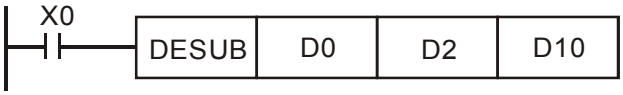

- When X2 =On, the binary floating point number (D1, D0) will be subtracted from K1234 (which has been automatically converted to a binary floating-point number), and the results stored in (D11, D10).

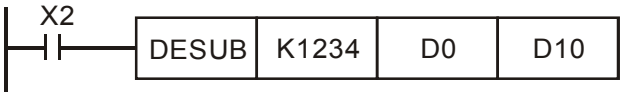

API 122	D	**EMUL**	P	S1 S2 D	Multiplication of binary floating point numbers

	Bit device			Word device							
	X	Y	M	K	H	KnX	KnY	KnM	T	C	D
S1				*	*						*
S2				*	*						*
D											*

Notes on operand usage:
Please refer to the function specifications table for each device in series for the scope of device usage

16-bit command			
–	–	–	–

32-bit command (13 STEP)			
DEMUL	Continuous execution type	DEMULP	Pulse execution type

Flag signal: none

Explanation

- **S_1**: multiplicand. **S_2**: multiplier. **D**: product.
- When the content of the register designated by **S_1** is multiplied by the content of the register designated by **S_2**, the product will be stored in the register designated by **D**; multiplication is performed entirely using binary floating-point numbers.
- **If the source operand S_1** or **S_2** designates a constant K or H, the command will transform that constant into a binary floating point number for use in multiplication.
- **In the situation when S_1** and **S_2** designate identical register numbers, if a "continuous execution" command is employed, when conditional contact is On, the register will perform multiplication once during each scan. Pulse execution type commands (DEMULP) are generally used under ordinary circumstances.

Example

- When X1=On, the binary floating point number (D1, D0) will be multiplied by the binary floating point number (D11, D10), and the product will be stored in the register designated by (D21, D20).

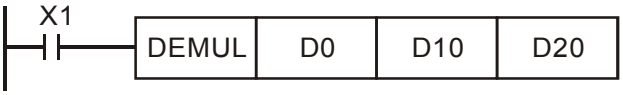

- When X2 =On, the binary floating point number (D1, D0) will be multiplied from K1234 (which has been automatically converted to a binary floating-point number), and the results stored in (D11, D10).

API 123	D	**EDIV**	P	S_1 S_2 D	Division of binary floating point numbers

	Bit device			Word device							
	X	Y	M	K	H	KnX	KnY	KnM	T	C	D
S1				*	*						*
S2				*	*						*
D											*

Notes on operand usage:
Please refer to the function specifications table for each device in series for the scope of device usage

16-bit command			
—	—	—	—

32-bit command (13 STEP)			
DEDIV	Continuous execution type	DEDIVP	Pulse execution type

Flag signal: none

Explanation

◆ **S_1**: dividend. **S_2**: divisor. **D**: quotient and remainder.

◆ When the content of the register designated by **S_1** is divided by the content of the register designated by **S_2**, the quotient will be stored in the register designated by **D**; division is performed entirely using binary floating-point numbers.

■ **If the source operand S_1** or **S_2** designates a constant K or H, the command will transform that constant into a binary floating point number for use in division.

Example

◆ When X1=On, the binary floating point number (D1, D0) will be divided by the binary floating point number (D11, D10), and the quotient stored in the register designated by (D21, D20).

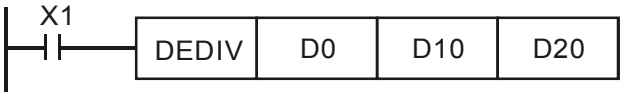

◆ When X2 =On, the binary floating point number (D1, D0) will be divided by K1,234 (which has been automatically converted to a binary floating-point number), and the results stored in (D11, D10).

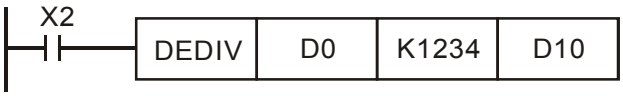

API 124	D	**EXP**	P	S D	Binary floating point number obtain exponent

	Bit device			Word device							
	X	Y	M	K	H	KnX	KnY	KnM	T	C	D
S				*	*						*
D											*

Notes on operand usage:
Please refer to the function specifications table for each device in series for the scope of device usage

16-bit command

—	—	—	—

32-bit command (9 STEP)

DEXP	Continuous execution type	DEXPP	Pulse execution type

Flag signal: none

Explanation

- **S**: operation source device. **D**: operation results device.
- Taking e =2.71828 as a base, **S** is the exponent in the EXP operation.
- [**D** +1，**D**]=EXP[**S +1**，**S**]
- Valid regardless of whether the content of **S** has a positive or negative value. The designated register D must have a 32-bit data format. This operation is performed using floating-point numbers, and **S** must therefore be converted to a floating point number.
- Content of operand **D** =e^{S} ; e=2.71828, **S** is the designated source data

Example

- When M0 is On, the value of (D1, D0) will be converted to a binary floating point number, which will be stored in register (D11, D10).
- When M1 is On, the EXP operation is performed on the exponent of (D11, D10); its value is a binary floating point number stored in register (D21, D20).

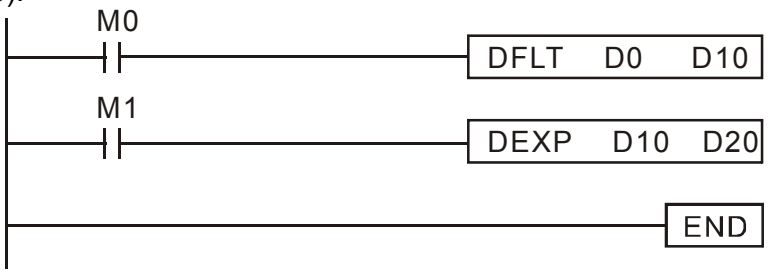

API 125	D	**LN**	P	S D	Binary floating point number obtain logarithm

	Bit device			Word device							
	X	Y	M	K	H	KnX	KnY	KnM	T	C	D
S				*	*						*
D											*

Notes on operand usage:
Please refer to the function specifications table for each device in series for the scope of device usage

16-bit command			
—	—	—	—

32-bit command (9 STEP)			
DLN	Continuous execution type	DLNP	Pulse execution type

Flag signal: none

Explanation

- **S**: operation source device. **D**: operation results device.
- Taking e =2.71828 as a base, **S** is the exponent in the EXP operation.
- [**D** +1，**D**]=EXP[**S +1**，**S**]
- Valid regardless of whether the content of **S** has a positive or negative value. The designated register D must have a 32-bit data format. This operation is performed using floating-point numbers, and **S** must therefore be converted to a floating point number.
- Content of operand **D** =e^S ; e=2.71828， **S** is the designated source data

Example

- When M0 is On, the value of (D1, D0) will be converted to a binary floating point number, which will be stored in register (D11, D10).
- When M1 is On, the EXP operation is performed on the exponent of (D11, D10); its value is a binary floating point number stored in register (D21, D20).

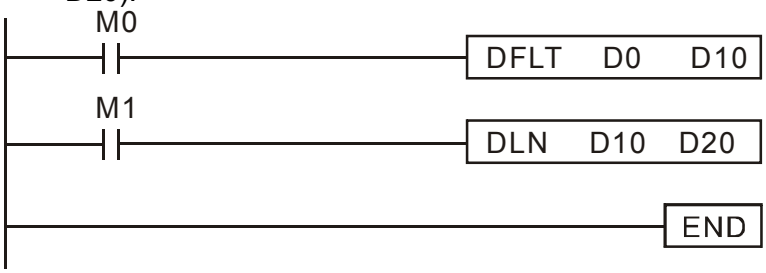

API 127	D	**ESQR**	P	(S) (D)	Binary floating point number find square root

	Bit device			Word device							
	X	Y	M	K	H	KnX	KnY	KnM	T	C	D
S				*	*						*
D											*

Notes on operand usage:
Please refer to the function specifications table for each device in series for the scope of device usage

16-bit command

—	—	—	—

32-bit command (9 STEP)

DESQR	Continuous execution type	DESQR P	Pulse execution type

Flag signal: none

Explanation

- **S**: source device for which square root is desired **D**: result of finding square root.
- When the square root is taken of the content of the register designated by **S**, the result is temporarily stored in the register designated by **D**. Taking square roots is performed entirely using binary floating-point numbers.
- If the source operand **S** refers to a constant K or H, the command will transform that constant into a binary floating point number for use in the operation.

Example

- When X0=On, the square root is taken of the binary floating point number (D1, D0), and the result is stored in the register designated by (D11, D10).

$\sqrt{(D1, D0)} \rightarrow (D11, D10)$

Binary floating point → Binary floating point

- When X2 =On, the square root is taken of K1,234 (which has been automatically converted to a binary floating-point number), and the results stored in (D11, D10).

API 129	D	**INT**	P	S D	Binary floating point number → BIN whole number transformation

	Bit device			Word device							
	X	Y	M	K	H	KnX	KnY	KnM	T	C	D
S											*
D											*

Notes on operand usage:
Please refer to the function specifications table for each device in series for the scope of device usage

16-bit command			
–	–	–	–

32-bit command (9 STEP)			
DINT	Continuous execution type	DINTP	Pulse execution type

Flag signal: none

Explanation

- **S**: the source device to be transformed. **D**: results of transformation.
- The content of the register designated by **S** is transformed from a binary floating point number format into a BIN whole number, and is temporarily stored in **D**. The BIN whole number floating point number will be discarded.
- The action of this command is the opposite of that of command API 49 (FLT).

Example

- When X0=On, the binary floating point number (D1, D0) is transformed into a BIN whole number, and the result is stored in (D10); the BIN whole number floating point number will be discarded.

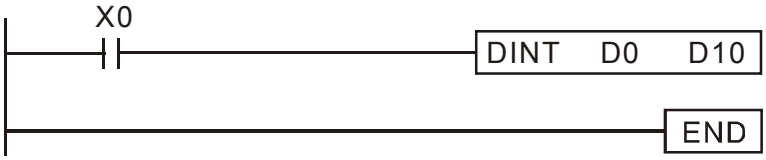

API 130	D	**SIN**	P	(S) (D)	Binary floating point number SIN operation

	Bit device			Word device							
	X	Y	M	K	H	KnX	KnY	KnM	T	C	D
S				*	*						*
D											*

Notes on operand usage:
Please refer to the function specifications table for each device in series for the scope of device usage

16-bit command			
–	–	–	–

32-bit command (9 STEP)			
DSIN	Continuous execution type	DSINP	Pulse execution type

Flag signal: none

Explanation

- **S**: the designated source value. **D**: the SIN value result.
- **S** is the designated source in radians.
- The value in radians (RAD) is equal to (angle ×π/180).
- The SIN obtained from the source value designated by **S** is stored in **D**.

The following figure displays the relationship between the arc and SIN results:

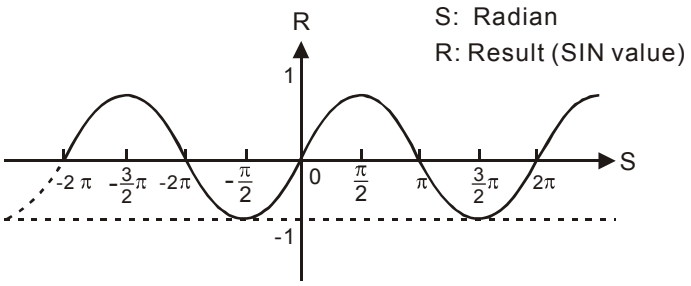

Example

- When X0=On, the SIN value of the designated binary floating point number (D1, D0) in radians (RAD) will be stored in (D11, D10), with the content consisting of a binary floating point number.

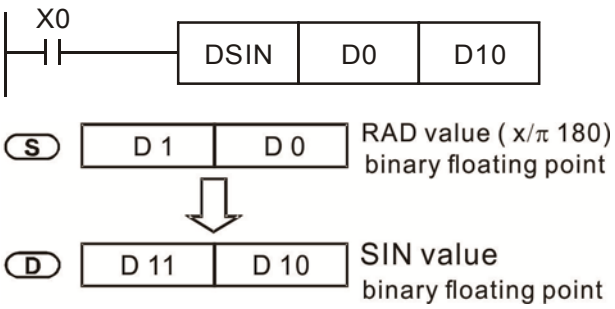

API 131	D	**COS**	P	(S) (D)	Binary floating point number COS operation

	Bit device			Word device							
	X	Y	M	K	H	KnX	KnY	KnM	T	C	D
S				*	*						*
D											*

Notes on operand usage:
Please refer to the function specifications table for each device in series for the scope of device usage

16-bit command			
—	—	—	—

32-bit command (9 STEP)			
DCOS	Continuous execution type	DCOSP	Pulse execution type

Flag signal: none

Explanation

- **S**: the designated source value. **D**: the COS value result.
- **The source designated by S can be given as radians or an angle; this is decided by flag M1018.**
- When M1018=Off, the operation is in radians mode, where the radians (RAD) value is equal to (angle ×π/180).
- When M1018=On, the operation is in the angle mode, where the angular range is 0°≤ angle <360°.
- When calculation results yield 0, M1020=On.
- The COS obtained from the source value designated by **S** is stored in **D**.

The following figure displays the relationship between the arc and SIN results:

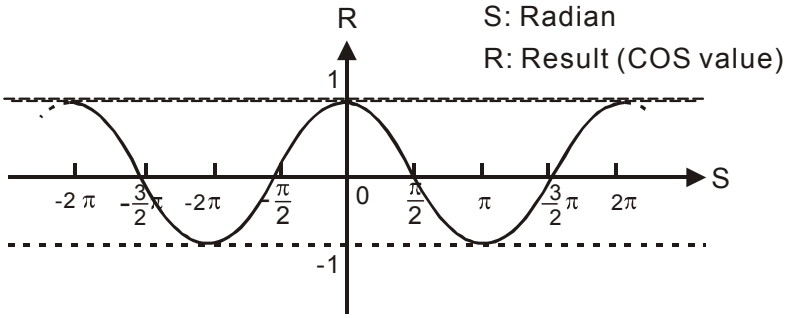

Example

- When X0=On, the COS value of the designated binary floating point number (D1, D0) in radians will be stored in (D11, D10), with the content consisting of a binary floating point number.

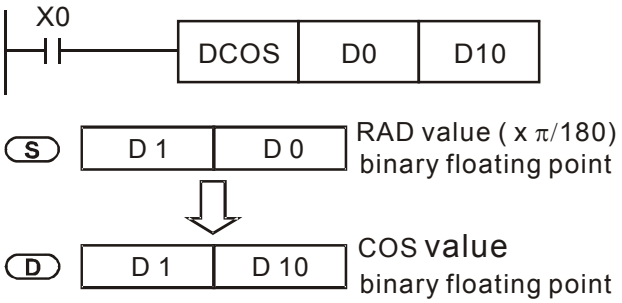

API 132	D	TAN	P	(S) (D)	Binary floating point number TAN operation

	Bit device			Word device							
	X	Y	M	K	H	KnX	KnY	KnM	T	C	D
S				*	*						*
D											*

Notes on operand usage:
Please refer to the function specifications table for each device in series for the scope of device usage

16-bit command

—	—	—	—

32-bit command (9 STEP)

DTAN	Continuous execution type	DTANP	Pulse execution type

Flag signal: none

Explanation

- **S**: the designated source value. **D**: the TAN value result.
- The source designated by **S** can be given as radians or an angle; this is decided by flag M1018.
- When M1018=Off, the operation is in radians mode, where the radians (RAD) value is equal to (angle ×π/180).
- When M1018=On, the operation is in the angle mode, where the angular range is 0°≤ angle <360°.
- When calculation results yield 0, M1020=On.
- The TAN obtained from the source value designated by **S** is stored in **D**.

The following figure displays the relationship between the arc and SIN results:

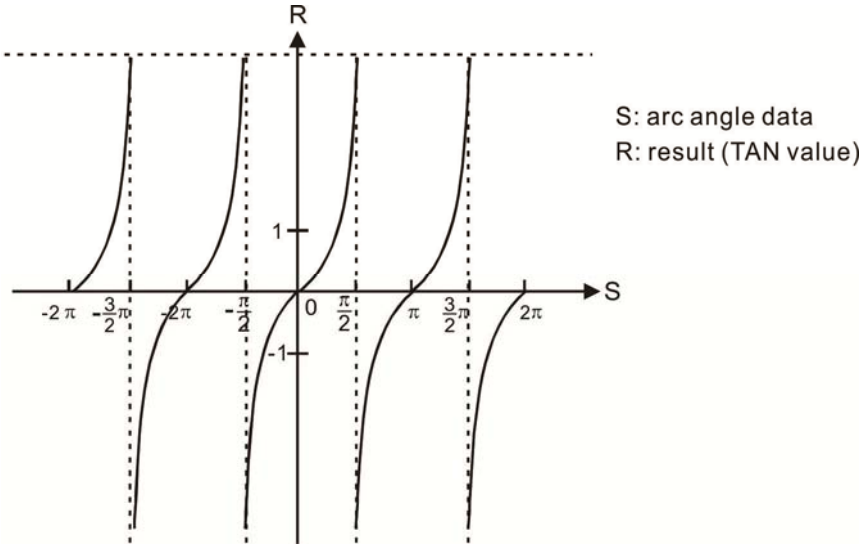

Example

◆ When X0=On, the TAN value of the designated binary floating point number (D1, D0) in radians (RAD) will be stored in (D11, D10), with the content consisting of a binary floating point number.

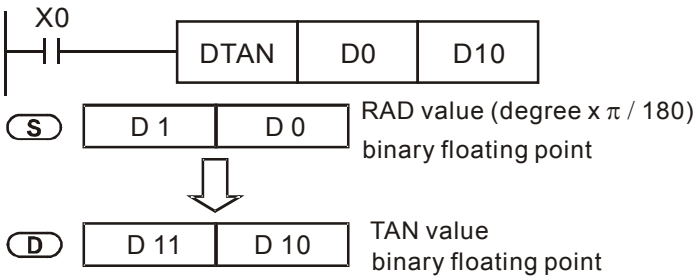

API 133	D	**ASIN**	P	S D	Binary floating point number ASIN operation

	Bit device			Word device							
	X	Y	M	K	H	KnX	KnY	KnM	T	C	D
S				*	*						*
D											*

Notes on operand usage:
Please refer to the function specifications table for each device in series for the scope of device usage

16-bit command			
—	—	—	—

32-bit command (9 STEP)			
DASIN	Continuous execution type	DASINP	Pulse execution type

Flag signal: none

Explanation

- **S**: the designated source (binary floating point number). **D**: the ASIN value result.
- ASIN value $=\sin^{-1}$

The figure below shows the relationship between input data and result:

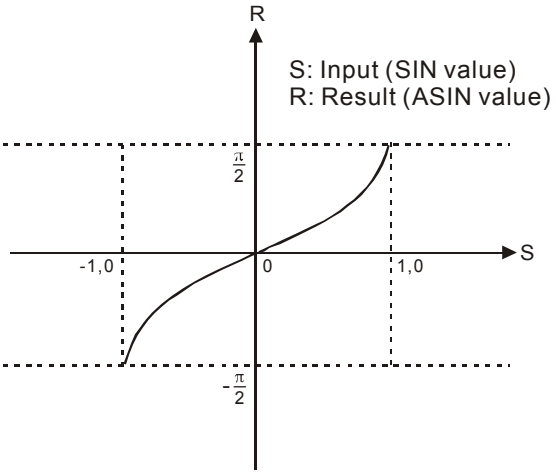

Example

- When X0=On, the ASIN value obtained from the designated binary floating point number (D1, D0) will be stored in (D11, D10), with the content consisting of a binary floating point number.

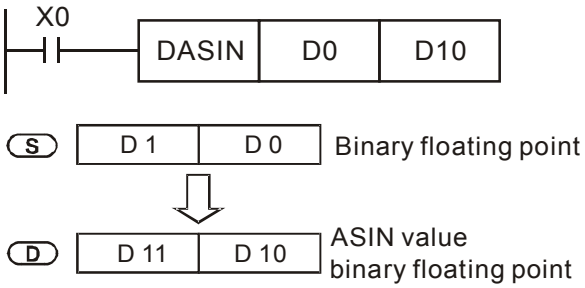

API 134	D	**ACOS**	P	(S) (D)	Binary floating point number ACOS operation

	Bit device			Word device							
	X	Y	M	K	H	KnX	KnY	KnM	T	C	D
S				*	*						*
D											*

Notes on operand usage:
Please refer to the function specifications table for each device in series for the scope of device usage

16-bit command

—	—	—	—

32-bit command (9 STEP)

DACOS	Continuous execution type	DACOS P	Pulse execution type

Flag signal: none

Explanation

- **S**: the designated source (binary floating point number). **D**: the ACOS value result.
- ACOS value =$\cos^{-1}$

The figure below shows the relationship between input data and result:

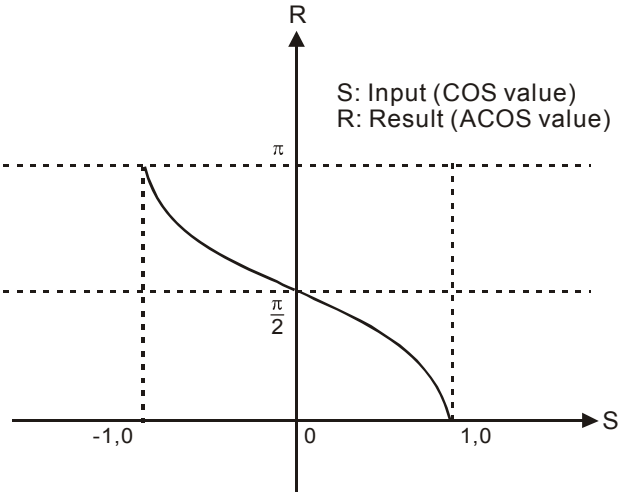

Example

- When X0=On, the ACOS value obtained from the designated binary floating point number (D1, D0) will be stored in (D11, D10), with the content consisting of a binary floating point number.

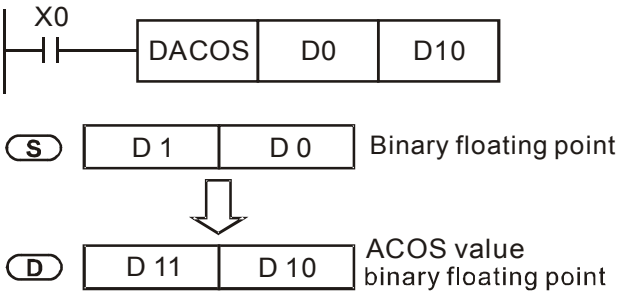

API 135	D	**ATAN**	P	(S) (D)	Binary floating point number ATAN operation

	Bit device			Word device							
	X	Y	M	K	H	KnX	KnY	KnM	T	C	D
S				*	*						*
D											*

Notes on operand usage:
Please refer to the function specifications table for each device in series for the scope of device usage

16-bit command

—	—	—	—

32-bit command (9 STEP)

DATAN	Continuous execution type	DATANP	Pulse execution type

Flag signal: none

Explanation

- **S**: the designated source (binary floating point number). **D**: the ATAN value result.
- ATAN value =$\tan^{-1}$

The figure below shows the relationship between input data and result:

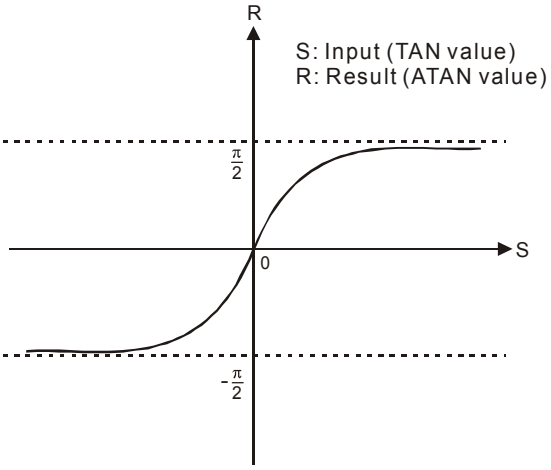

Example

- When X0=On, the TAN value obtained from the designated binary floating point number (D1, D0) will be stored in (D11, D10), with the content consisting of a binary floating point number.

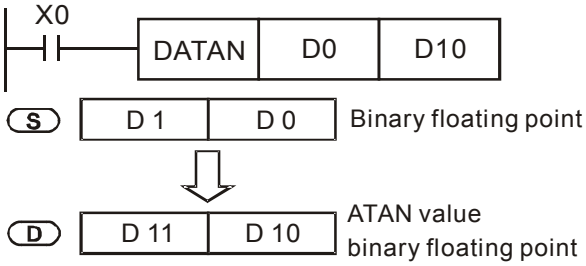

API 136	D	**SINH**	P	(S) (D)	Binary floating point number SINH operation

	Bit device			Word device							
	X	Y	M	K	H	KnX	KnY	KnM	T	C	D
S				*	*						*
D											*

Notes on operand usage:
Please refer to the function specifications table for each device in series for the scope of device usage

16-bit command

—	—	—	—

32-bit command (9 STEP)

DSINH	Continuous execution type	DSINHP	Pulse execution type

Flag signal: none

Explanation

- **S**: the designated source (binary floating point number). **D**: the SINH value result.
- SINH value $=(e^{s}-e^{-s})/2$

Example

- When X0=On, the SINH value obtained from the designated binary floating point number (D1, D0) will be stored in (D11, D10), with the content consisting of a binary floating point number.

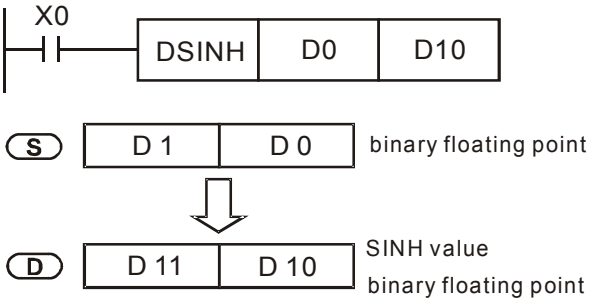

API 137	D	**COSH**	P	(S) (D)	Binary floating point number COSH operation

	Bit device			Word device							
	X	Y	M	K	H	KnX	KnY	KnM	T	C	D
S				*	*						*
D											*

Notes on operand usage:
Please refer to the function specifications table for each device in series for the scope of device usage

16-bit command

—	—	—	—

32-bit command (9 STEP)

DCOSH	Continuous execution type	DCOSHP	Pulse execution type

Flag signal: none

Explanation

- **S**: the designated source (binary floating point number). **D**: the COSH value result.
- COSH value $=(e^{s}+e^{-s})/2$

Example

- When X0=On, the COSH value obtained from the designated binary floating point number (D1, D0) will be stored in (D11, D10), with the content consisting of a binary floating point number.

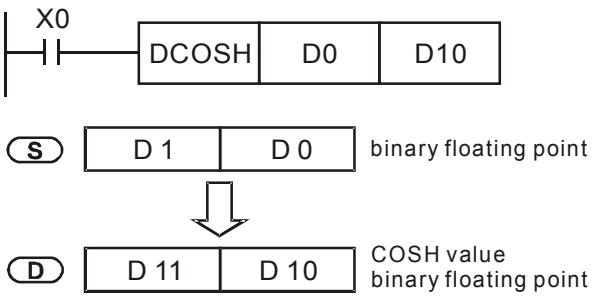

API 138	D	**TANH**	P	(S) (D)	Binary floating point number TANH operation

	Bit device			Word device							
	X	Y	M	K	H	KnX	KnY	KnM	T	C	D
S				*	*						*
D											*

Notes on operand usage:
Please refer to the function specifications table for each device in series for the scope of device usage

16-bit command

—	—	—	—

32-bit command (9 STEP)

DTANH	Continuous execution type	DTANHP	Pulse execution type

Flag signal: none

Explanation

- **S**: the designated source (binary floating point number). **D**: the TANH value result.
- tanh value $=(e^{s}-e^{-s})/(e^{s}+e^{-s})$

Example

- When X0=On, the TANH value obtained from the designated binary floating point number (D1, D0) will be stored in (D11, D10), with the content consisting of a binary floating point number.

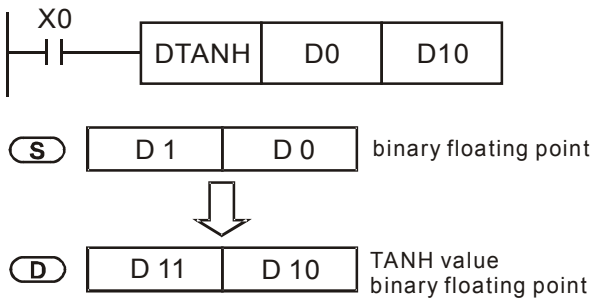

API 160		**TCMP**	**P**	S_1 S_2 S_3 S D	Comparison of calendar data

	Bit device			Word device							
	X	Y	M	K	H	KnX	KnY	KnM	T	C	D
S1				*	*	*	*	*	*	*	*
S2				*	*	*	*	*	*	*	*
S3				*	*	*	*	*	*	*	*
S									*	*	*
D		*	*								

Notes on operand usage:
Please refer to the function specifications table for each device in series for the scope of device usage

16-bit command (11 STEP)

TCMP	Continuous execution type	TCMPP	Pulse execution type

32-bit command

—	—	—	—

Flag signal: none

Explanation

- **S_1**: Sets the hours of the comparison time, setting range is "K0-K23." **S_2**: Sets the minutes of the comparison time, setting range is "K0-K59." **S_3**: Sets the seconds of the comparison time, setting range is "K0-K59." **S**: current calendar time. **D**: Results of comparison.
- Compares the time in hours, minutes, and seconds set in **S_1** - **S_3** with the current calendar time in hours, minutes, and seconds, with the results of comparison expressed in **D**.
- **S** The hour content of the current calendar time is "K0-K23." **S** +1 comprises the minutes of the current calendar time, and consists of "K0-K59." **S** +2 comprises the seconds of the current calendar time, and consists of "K0-K59."
- The current calendar time designated by **S** is usually compared using the TCMP command after using the TRD command to read the current calendar time. If the content value of **S** exceeds the range, this is considered an operating error, the command will not execute, and M1068=On.

Example

- When X10=On, the command will execute, and the current calendar time in D20-D22 will be compared with the preset value of 12:20:45; the results will be displayed in M10-M12. When X10 On→Off, the command will not be executed, but the On/Off status prior to M10-M12 will be maintained.
- If results in the form of ≥, ≤, or ≠ are needed, they can be obtained by series and parallel connection of M10-M12.

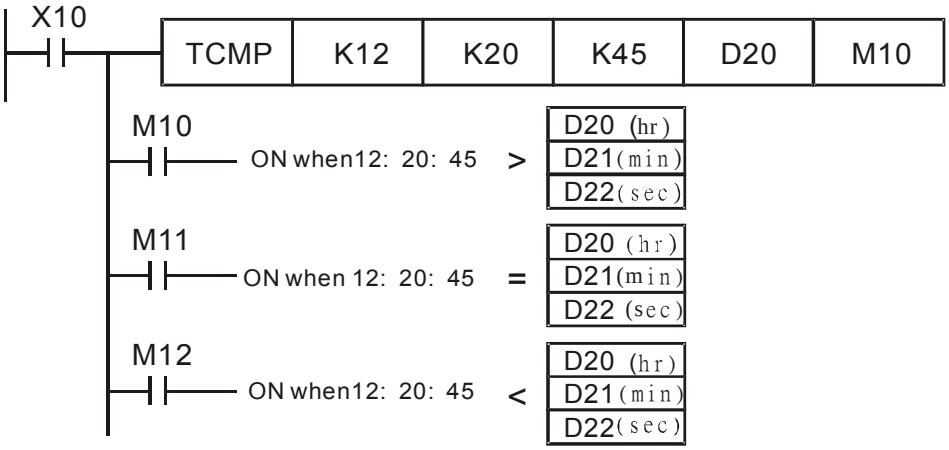

API 161	TZCP	P	S1 S2 S D	Comparison of calendar data

	Bit device			Word device							
	X	Y	M	K	H	KnX	KnY	KnM	T	C	D
S1									*	*	*
S2									*	*	*
S									*	*	*
D		*	*								

Notes on operand usage:
Please refer to the function specifications table for each device in series for the scope of device usage

16-bit command (9 STEP)			
TZCP	Continuous execution type	TZCPP	Pulse execution type
32-bit command			
—	—	—	—

Flag signal: none

Explanation

- **S_1**: Sets the lower limit of the comparison time. **S_2**: Sets the upper limit of the comparison time. **S**: current calendar time. **D**: Results of comparison.
- Performs range comparison by comparing the hours, minutes, and seconds of the current calendar time designated by **S** with the lower limit of the comparison time set as **S_1** and the upper limit of the comparison time set as **S_2**, and expresses the results of comparison in **D**.
- **S_1**、**S_1** +1、**S_1** +2: Sets the hours, minutes, and seconds of the lower limit of the comparison time.
- **S_2**、**S_2** +1、**S_2** +2: Sets the hours, minutes, and seconds of the upper limit of the comparison time.
- **S**、**S** +1、**S** +2: The hours, minutes, and seconds of the current calendar time
- The D0 designated by the **S** listed in this program is usually obtained by comparison using the TZCP command after using the TRD command in advance to read the current calendar time. If the value of **S_1**, **S_2**, or **S** exceeds the range, this is considered an operating error, the command will not execute, and M1068=On.
- When the current time **S** is less than the lower limit value **S_1** and **S** is less than the upper limit value **S_2**, **D** will be On. When the current time **S** is greater than the lower limit value **S_1** and **S** is greater than the upper limit value **S_2**, **D** +2 will be On; **D** +1 will be On under other conditions.

Example

- When X10=On, the TZCP command executes, and one of M10-M12 will be On. When X10=Off, the TZCP command will not execute, and M10-M12 will remain in the X10=Off state.

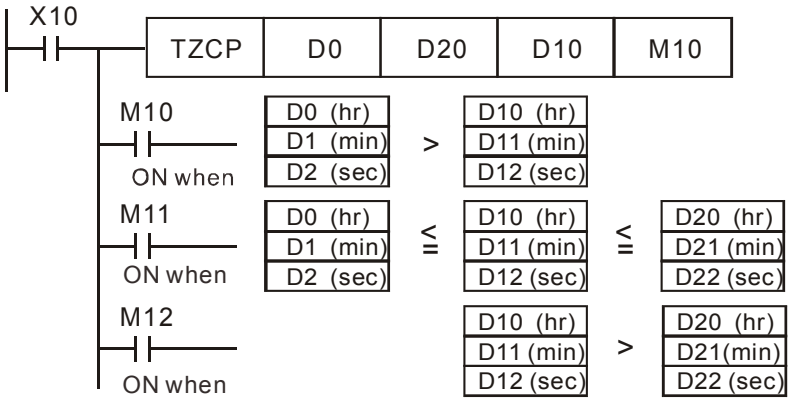

API 162		TADD	P	S1 S2 D	Calendar data addition

	Bit device			Word device							
	X	Y	M	K	H	KnX	KnY	KnM	T	C	D
S1									*	*	*
S2									*	*	*
D									*	*	*

Notes on operand usage:
Please refer to the function specifications table for each device in series for the scope of device usage

16-bit command (7 STEP)			
TADD	Continuous execution type	TADDP	Pulse execution type
32-bit command			
—	—	—	—

- Flag signal: M1020 Zero flag
  M1022 Carry flag
  M1068 Calendar error

Explanation

- **S_1**: time addend. **S_2**: time augend. **D**: time sum.
- The calendar data in hours, minutes, and seconds designated by **S_2** is added to the calendar data in hours, minutes, and seconds designated by **S_1**, and the result is stored as hours, minutes, and seconds in the register designated by **D**.
- If the value of **S_1** or **S_2** exceeds the range, this is considered an operating error, the command will not execute, M1067, M1068=On, and D1067 will record the error code 0E1A(HEX).
- If the results of addition are greater than or equal to 24 hours, carry flag M1022=On, and **D** will display the results of addition minus 24 hours.
- If the results of addition are equal to 0 (0 hours, 0 minutes, 0 seconds), zero flag M1020=On.

Example

- When X10=On, the TADD command will be executed, and the calendar data in hours, minutes, and seconds designated by D0 to D2 will be added to the calendar data in hours, minutes, and seconds designated by D10 to D12, and the results are stored as a total number of hours, minutes, and seconds in the registers designated by D20 to D22.

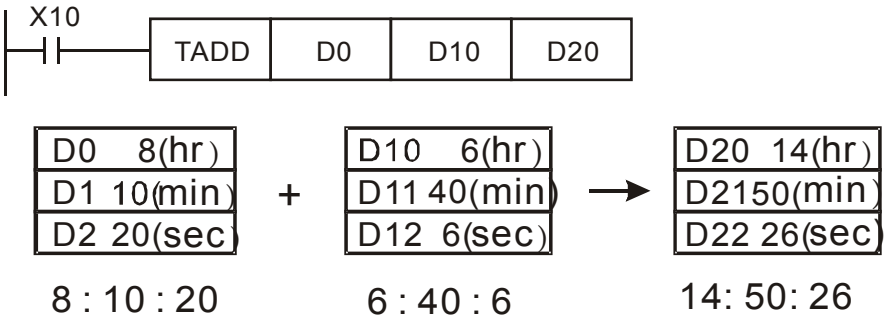

API 163		**TSUB**	P	(S1) (S2) (D)	Calendar data subtraction

	Bit device			Word device							
	X	Y	M	K	H	KnX	KnY	KnM	T	C	D
S1									*	*	*
S2									*	*	*
D									*	*	*

Notes on operand usage:
Please refer to the function specifications table for each device in series for the scope of device usage

16-bit command (7 STEP)			
TSUB	Continuous execution type	TSUBP	Pulse execution type
32-bit command			
—	—	—	—

- Flag signal: M1020 Zero flag
  M1022 Carry flag
  M1068 Calendar error

Explanation

- **S_1**: time minuend. **S_2**: time augend. **D**: time sum.
- Subtracts the calendar data in hours, minutes, and seconds designated by **S_2** from the calendar data in hours, minutes, and seconds designated by **S_1**, and the result is temporarily stored as hours, minutes, and seconds in the register designated by **D**.
- If the value of **S_1** or **S_2** exceeds the range, this is considered an operating error, the command will not execute, M1067, M1068=On, and D1067 will record the error code 0E1A(HEX).
- If subtraction results in a negative number, borrow flag M1021=On, and the result of that negative number plus 24 hours will be displayed in the register designated by **D**.
- If the results of subtraction are equal to 0 (0 hours, 0 minutes, 0 seconds), zero flag M1020=On.

Example

- When X10=On, the TADD command will be executed, and the calendar data in hours, minutes, and seconds designated by D10 to D12 will be subtracted from the calendar data in hours, minutes, and seconds designated by D0 to D2, and the results are stored as a total number of hours, minutes, and seconds in the registers designated by D20 to D22.

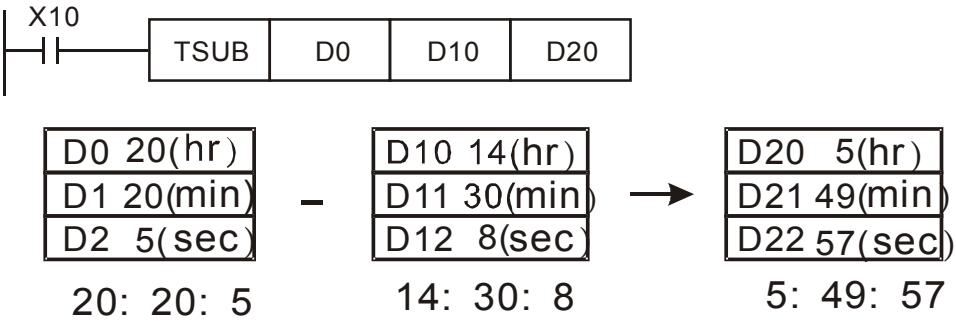

API 166		TRD	P	D	Calendar data read

	Bit device			Word device							
	X	Y	M	K	H	KnX	KnY	KnM	T	C	D
D									*	*	*

Notes on operand usage:
Please refer to the function specifications table for each device in series for the scope of device usage

16-bit command (3 STEP)

TRD	Continuous execution type	120	Pulse execution type

32-bit command

—	—	—	—

- Flag signal: none

Explanation

- **S_1**: time minuend. **S_2**: time augend. **D**: time sum.
- **D**: device used to store the current calendar time after reading.
- The EH/EH2/SV/EH3/SV2/SA/SX/SC main units have a built-in calendar clock, and the clock provides seven sets of data comprising year, week, month, day, hour, minute, and second stored in D1063 to D1069. The TRD command function allows program designers to directly read the current calendar time into the designated seven registers.
- D1063 only reads the two right digits of the Western calendar year.

Example

- When X0=On, the current calendar time is read into the designated registers D0 to D6.
- In D1064, 1 indicates Monday, 2 indicates Tuesday, and so on, with and 7 indicating Sunday.

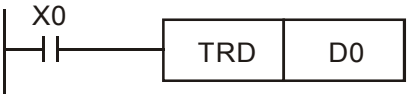

Special D	Item	Content		General D	Item
D1063	Year (Western)	00~99	→	D0	Year (Western)
D1064	Weeks	1~7	→	D1	Weeks
D1065	Month	1~12	→	D2	Month
D1066	Day	1~31	→	D3	Day
D1067	Hour	0~23	→	D4	Hour
D1068	Minute	0~59	→	D5	Minute
D1069	Second	0~59	→	D6	Second

API 170	D	**GRY**	P	S D	BIN→GRAY code transformation

	Bit device			Word device							
	X	Y	M	K	H	KnX	KnY	KnM	T	C	D
S				*	*	*	*	*	*	*	*
D							*	*	*	*	*

Notes on operand usage:
Please refer to the function specifications table for each device in series for the scope of device usage

16-bit command (5 STEP)

GRY	Continuous execution type	GRYP	Pulse execution type

32-bit command (9 STEP)

DGRY	Continuous execution type	DGRYP	Pulse execution type

- Flag signal: none

Explanation

- **S**: source device. **D**: device storing GRAY code.
- Transforms the content value (BIN value) of the device designated by **S** to GRAY code, which is stored in the device designated by **D**.
- The valid range of **S** is as shown below; if this range is exceeded, it will be considered an error, and the command will not execute.

  16-bit command: 0~32,767
- 32-bit command: 0~2,147,483,647

Example

◆ When X0=On, the constant K6513 will be transformed to GRAY code and stored in D0.

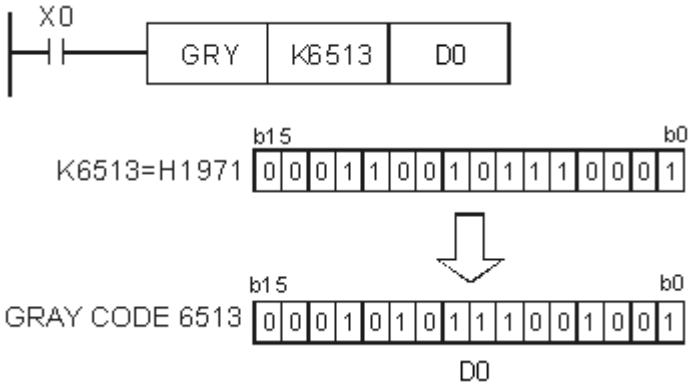

API 171	D	**GBIN**	P	(S) (D)	GRAY code →BIN transformation

	Bit device			Word device							
	X	Y	M	K	H	KnX	KnY	KnM	T	C	D
S				*	*	*	*	*	*	*	*
D							*	*	*	*	*

Notes on operand usage:
Please refer to the function specifications table for each device in series for the scope of device usage

16-bit command (5 STEP)

GBIN	Continuous execution type	GBINP	Pulse execution type

32-bit command (9 STEP)

DGBIN	Continuous execution type	DGBINP	Pulse execution type

- Flag signal: none

Explanation

- **S**: source device used to store GRAY code. **D**: device used to store BIN value after transformation.
- The GRAY code corresponding to the value of the device designated by **S** is transformed into a BIN value, which is stored in the device designated by **D**.
- This command will transform the value of the absolute position encoder connected with the PLC's input and (this encoder usually has an output value in the form of GRAY code) into a BIN value, which is stored in the designated register.
- The valid range of **S** is as shown below; if this range is exceeded, it will be considered an error, and the command will not execute.

  16-bit command: 0~32,767
- 32-bit command: 0~2,147,483,647

Example

◆ When X20=On, the GRAY code of the absolute position encoder connected with input points X0 to X17 will be transformed into BIN value and stored in D10.

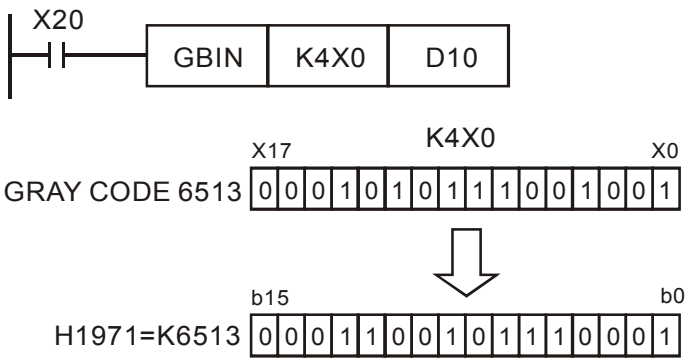

API 215~217	D	**LD#**		(S1) (S2)	Contact form logical operation LD#

	Bit device			Word device							
	X	Y	M	K	H	KnX	KnY	KnM	T	C	D
S1				*	*	*	*	*	*	*	*
S2				*	*	*	*	*	*	*	*

Notes on operand usage: # ：&、|、^
Please refer to the function specifications table for each device in series for the range of device usage

16-bit command (5 STEP)			
LD#	Continuous execution type	—	—

32-bit command (9 STEP)			
DLD#	Continuous execution type	—	—

Flag signal: none

Explanation

- **S_1**: data source device 1. **S_2**: data source device 2.
- This command performs comparison of the content of **S_1** and **S_2**; when the result of comparison is not 0, this command will be activated, but this command will not be activated when the result of comparison is 0.
- The LD#This command can be used while directly connected with the busbar

API No.	16-bit commands	32-bit commands	Conditions for activation				Conditions for inactivation			
215	LD&	**D**LD&	**S_1**	&	**S_2**	≠0	**S_1**	&	**S_2**	=0
216	LD|	**D**LD|	**S_1**	|	**S_2**	≠0	**S_1**	|	**S_2**	=0
217	LD^	**D**LD^	**S_1**	^	**S_2**	≠0	**S_1**	^	**S_2**	=0

&: logical AND operation.

|: logical OR operation.

^: logical XOR operation.

Example

- When the content of C0 and C10 is subjected to the logical AND operation, and the result is not equal to 0, Y10=On.
- When the content of D200 and D300 is subjected to the logical OR operation, and the result is not equal to 0, and X1=On, Y11=On and remains in that state.

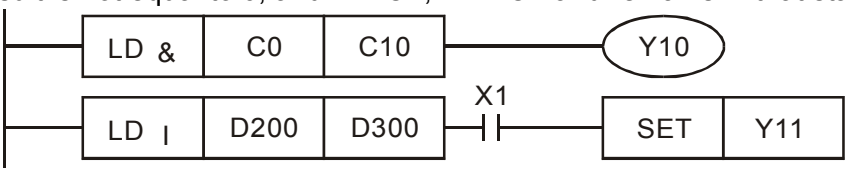

API 218~220	D	**AND#**		(S1) (S2)	Contact form logical operation AND#

	Bit device			Word device							
	X	Y	M	K	H	KnX	KnY	KnM	T	C	D
S1				*	*	*	*	*	*	*	*
S2				*	*	*	*	*	*	*	*

Notes on operand usage: # : & 、| 、^
Please refer to the function specifications table for each device in series for the scope of device usage

16-bit command (5 STEP)			
AND#	Continuous execution type	—	—

32-bit command (9 STEP)			
DAND#	Continuous execution type	—	—

Flag signal: none

Explanation

- **S_1**: data source device 1. **S_2**: data source device 2.
- This command performs comparison of the content of **S_1** and **S_2**; when the result of comparison is not 0, this command will be activated, but this command will not be activated when the result of comparison is 0.
- The AND# command is an operation command in series with the contact.

API No.	16-bit commands	32-bit commands	Conditions for activation				Conditions for inactivation			
218	AND&	**D**AND&	**S_1**	&	**S_2**	≠ 0	**S_1**	&	**S_2**	= 0
219	AND|	**D**AND|	**S_1**	|	**S_2**	≠ 0	**S_1**	|	**S_2**	= 0
220	AND^	**D**AND^	**S_1**	^	**S_2**	≠ 0	**S_1**	^	**S_2**	= 0

&: logical AND operation.

|: logical OR operation.

^: logical XOR operation.

Example

- When X0=On and the content of C0 and C10 is subjected to the logical AND operation, and the result is not equal to 0, Y10=On.
- When X1=Off and D10 and D0 is subjected to the logical OR operation, and the result is not equal to 0, Y11=On and remains in that state.
- When X2 =On and the content of the 32-bit register D200(D201) and 32-bit register D100(D101) is subjected to the logical XOR operation, and the result is not equal to 0 or M3=On, M50=On.

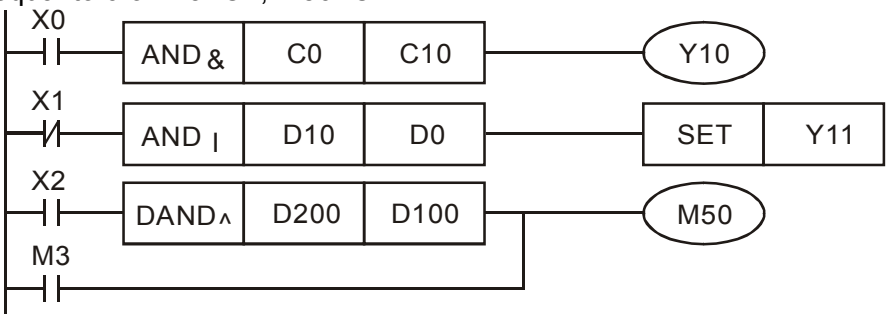

API 221~223	D	**OR#**		(S1) (S2)	Contact form logical operation OR#

	Bit device			Word device							
	X	Y	M	K	H	KnX	KnY	KnM	T	C	D
S1				*	*	*	*	*	*	*	*
S2				*	*	*	*	*	*	*	*

Notes on operand usage: # : & 、| 、^
Please refer to the function specifications table for each device in series for the scope of device usage

16-bit command (5 STEP)			
OR#	Continuous execution type	—	—

32-bit command (9 STEP)			
DOR#	Continuous execution type	—	—

Flag signal: none

Explanation

- **S_1**: data source device 1. **S_2**: data source device 2.
- This command performs comparison of the content of **S_1** and **S_2**; when the result of comparison is not 0, this command will be activated, but this command will not be activated when the result of comparison is 0.
- The OR# command is an operation command in series with the contact.

API No.	16-bit commands	32-bit commands	Conditions for activation				Conditions for inactivation			
221	OR&	**D**OR&	**S_1**	&	**S_2**	≠0	**S_1**	&	**S_2**	=0
222	OR|	**D**OR|	**S_1**	|	**S_2**	≠0	**S_1**	|	**S_2**	=0
223	OR^	**D**OR^	**S_1**	^	**S_2**	≠0	**S_1**	^	**S_2**	=0

&: logical AND operation.

|: logical OR operation.

^: logical XOR operation.

Example

- When X1=On or the content of C0 and C10 is subjected to the logical AND operation, and the result is not equal to 0, Y0=On.
- When X2 and M30 are both equal to On, or the content of 32-bit register D10 (D11) and 32-bit register D20 (D21) is subjected to the logical OR operation, and the result is not equal to 0, or the content of the 32-bit counter C235 and the 32-bit register D200 (D201) is subjected to the logical XOR operation, and the result is not equal to 0, M60=On.

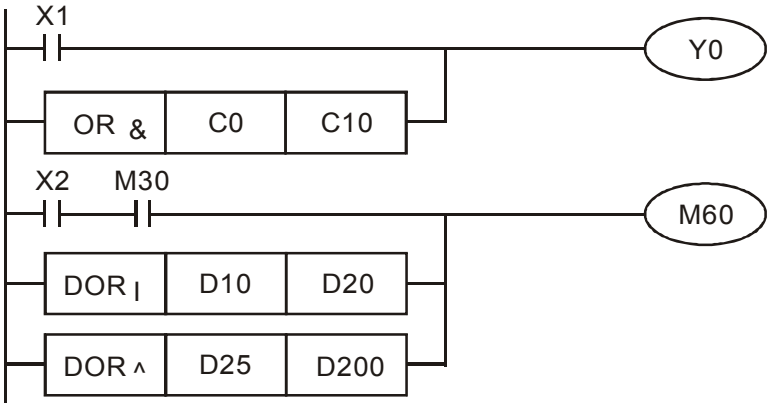

API 224~230	D	**LD※**		(S1) (S2)	Contact form compare LD*

	Bit device			Word device							
	X	Y	M	K	H	KnX	KnY	KnM	T	C	D
S1				*	*	*	*	*	*	*	*
S2				*	*	*	*	*	*	*	*

Notes on operand usage: ※ : = 、 > 、 < 、 <> 、 ≦ 、 ≧
Please refer to the function specifications table for each device in series for the scope of device usage

16-bit command (5 STEP)			
LD※	Continuous execution type	–	–

32-bit command (9 STEP)			
DLD※	Continuous execution type	–	–

Flag signal: none

Explanation

- **S_1**: data source device 1. **S_2**: data source device 2.
- This command compares the content of **S_1** and **S_2**. Taking API 224 (LD=) as an example, this command will be activated when the result of comparison is "equal," and will not be activated when the result is "unequal."
- The LD* can be used while directly connected with the busbar

API No.	16-bit commands	32-bit commands	Conditions for activation	Conditions for inactivation
224	LD＝	**D**LD＝	$S_1 = S_2$	$S_1 \neq S_2$
225	LD＞	**D**LD＞	$S_1 > S_2$	$S_1 \leqq S_2$
226	LD＜	**D**LD＜	$S_1 < S_2$	$S_1 \geqq S_2$
228	LD＜＞	**D**LD＜＞	$S_1 \neq S_2$	$S_1 = S_2$
229	LD＜＝	**D**LD＜＝	$S_1 \leqq S_2$	$S_1 > S_2$
230	LD＞＝	**D**LD＞＝	$S_1 \geqq S_2$	$S_1 < S_2$

Example

- When the content of C10 is equal to K200, Y10=On.
- When the content of D200 is greater than K-30, and X1=On, Y11=On and remains in that state.

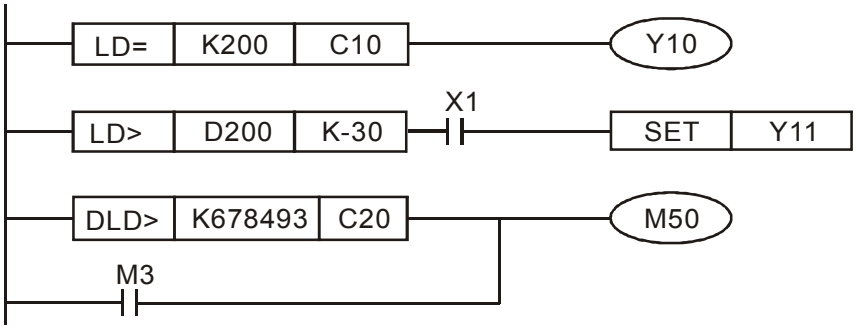

API 232~238	D	**AND※**		(S1) (S2)	Contact form compare AND*

	Bit device			Word device							
	X	Y	M	K	H	KnX	KnY	KnM	T	C	D
S1				*	*	*	*	*	*	*	*
S2				*	*	*	*	*	*	*	*

Notes on operand usage: ※ : = 、 > 、 < 、 <> 、 ≦ 、 ≧
Please refer to the function specifications table for each device in series for the scope of device usage

16-bit command (5 STEP)			
AND※	Continuous execution type	—	—

32-bit command (9 STEP)			
DAND※	Continuous execution type	—	—

Flag signal: none

Explanation

- **S_1**: data source device 1. **S_2**: data source device 2.
- This command compares the content of **S_1** and **S_2**. Taking API 232 (AND=) as an example, when the result of comparison is equal, this command will be activated; when the result of comparison is unequal, this command will not be activated.
- The AND* command is a comparison command in series with a contact.

API No.	16-bit commands	32-bit commands	Conditions for activation	Conditions for inactivation
232	AND＝	**D**AND＝	$S_1 = S_2$	$S_1 \neq S_2$
233	AND＞	**D**AND＞	$S_1 > S_2$	$S_1 \leqq S_2$
234	AND＜	**D**AND＜	$S_1 < S_2$	$S_1 \geqq S_2$
236	AND＜＞	**D**AND＜＞	$S_1 \neq S_2$	$S_1 = S_2$
237	AND＜＝	**D**AND＜＝	$S_1 \leqq S_2$	$S_1 > S_2$
238	AND＞＝	**D**AND＞＝	$S_1 \geqq S_2$	$S_1 < S_2$

Example

- When X0=On and the current value of C10 is also equal to K200, Y10=On.
- When X1=Off and the content of register D0 is not equal to K-10, Y11=On and remains in that state.
- When X2 =On and the content of the 32-bit register D0(D11)is less than 678,493, or M3=On, M50=On.

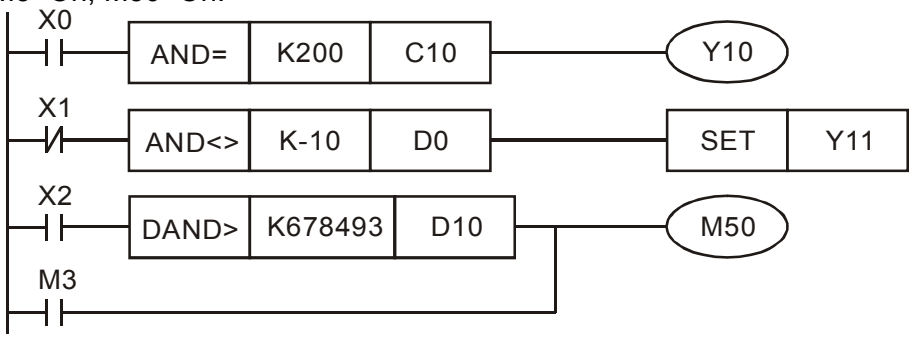

API 240~246	D	**OR※**		(S1) (S2)	Contact form compare OR*

	Bit device			Word device							
	X	Y	M	K	H	KnX	KnY	KnM	T	C	D
S1				*	*	*	*	*	*	*	*
S2				*	*	*	*	*	*	*	*

Notes on operand usage: ※ : = 、 > 、 < 、 <> 、 ≦ 、 ≧
Please refer to the function specifications table for each device in series for the scope of device usage

16-bit command (5 STEP)			
OR※	Continuous execution type	—	—

32-bit command (9 STEP)			
DOR※	Continuous execution type	—	—

Flag signal: none

Explanation

- **S_1**: data source device 1. **S_2**: data source device 2.
- This command compares the content of **S_1** and **S_2**. Taking API 240 (OR=) as an example, when the result of comparison is equal, this command will be activated; when the result of comparison is unequal, this command will not be activated.
- The OR* command is a compare command in parallel with a contact.

API No.	16-bit commands	32-bit commands	Conditions for activation	Conditions for inactivation
240	OR＝	**D**OR＝	$S_1 = S_2$	$S_1 \neq S_2$
241	OR＞	**D**OR＞	$S_1 > S_2$	$S_1 \leqq S_2$
242	OR＜	**D**OR＜	$S_1 < S_2$	$S_1 \geqq S_2$
244	OR＜＞	**D**OR＜＞	$S_1 \neq S_2$	$S_1 = S_2$
245	OR＜＝	**D**OR＜＝	$S_1 \leqq S_2$	$S_1 > S_2$
246	OR＞＝	**D**OR＞＝	$S_1 \geqq S_2$	$S_1 < S_2$

Example

- When X0=On and the current value of C10 is also equal to K200, Y10=On.
- When X1=Off and the content of register D0 is not equal to K-10, Y11=On and remains in that state.
- When X2 =On and the content of the 32-bit register D0(D11)is less than 678,493, or M3=On, M50=On.

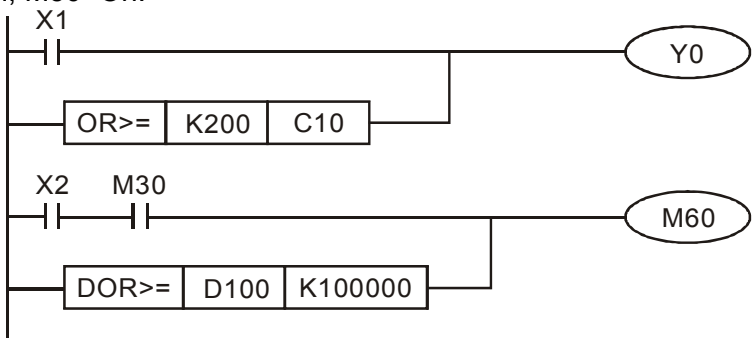

API 275~280		**FLD※**		(S1) (S2)	Floating point number contact form compare LD*

	Bit device			Word device							
	X	Y	M	K	H	KnX	KnY	KnM	T	C	D
S1									＊	＊	＊
S2									＊	＊	＊

Notes on operand usage: #：&、|、^
Please refer to the function specifications table for each device in series for the scope of device usage

16-bit command

—	—	—	—

32-bit command (9 STEP)

FLD※	Continuous execution type	—	—

Flag signal: none

Explanation

- ◆ S_1: data source device 1. S_2: data source device 2.
- ◆ This command compares the content of S_1 and S_2. Taking "FLD=" as an example, if the result of comparison is "equal," this command will be activated; but it will not be activated when the result is "unequal."
- ◆ The FLD* command can directly input floating point numerical values (for instance: F1.2) to the S_1, S_2 operands, or store floating-point numbers in register D for use in operations.
- ◆ This command can be used while directly connected with the busbar

API No.	32-bit commands	Conditions for activation	Conditions for inactivation
275	FLD＝	$S_1 = S_2$	$S_1 \neq S_2$
276	FLD＞	$S_1 > S_2$	$S_1 \leqq S_2$
277	FLD＜	$S_1 < S_2$	$S_1 \geqq S_2$
278	FLD＜＞	$S_1 \neq S_2$	$S_1 = S_2$
279	FLD＜＝	$S_1 \leqq S_2$	$S_1 > S_2$
280	FLD＞＝	$S_1 \geqq S_2$	$S_1 < S_2$

Example

- ◆ When the floating point number of register D200 (D201) is less than or equal to F1.2, and X1 activated, contact Y21 will be activated and remain in that state.

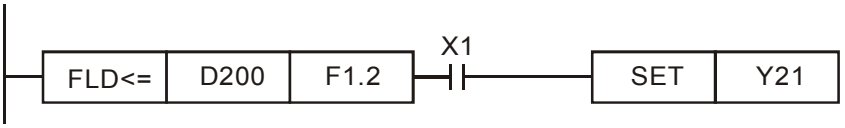

API 281~286		**FAND※**		(S1) (S2)	Floating point number contact form compare AND*

	Bit device			Word device							
	X	Y	M	K	H	KnX	KnY	KnM	T	C	D
S1									∗	∗	∗
S2									∗	∗	∗

Notes on operand usage: #：&、|、^
Please refer to the function specifications table for each device in series for the scope of device usage

16-bit command			
–	–	–	–

32-bit command (9 STEP)			
FAND※	Continuous execution type	–	–

Flag signal: none

Explanation

- **S_1**: data source device 1. **S_2**: data source device 2.
- This command compares the content of **S_1** and **S_2**. Taking "FAND=" as an example, if the result of comparison is "equal," this command will be activated; but it will not be activated when the result is "unequal."
- The FAND* command can directly input floating point numerical values (for instance: F1.2) to the **S_1**, **S_2** operands, or store floating-point numbers in register D for use in operations.
- This command can be used while directly connected with the busbar

API No.	32-bit commands	Conditions for activation	Conditions for inactivation
281	FAND	$S_1 = S_2$	$S_1 \neq S_2$
282	FAND＞	$S_1 > S_2$	$S_1 \leqq S_2$
283	FAND＜	$S_1 < S_2$	$S_1 \geqq S_2$
284	FAND＜＞	$S_1 \neq S_2$	$S_1 = S_2$
285	FAND＜＝	$S_1 \leqq S_2$	$S_1 > S_2$
286	FAND＞＝	$S_1 \geqq S_2$	$S_1 < S_2$

Example

- When X1=Off, and the floating point number in register D100 (D101) is not equal to F1.2, Y21=On and remains in that state.

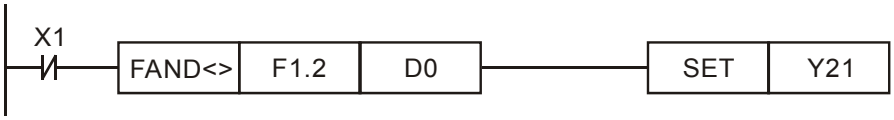

API 287~292		**FOR※**		(S1) (S2)	Floating point number contact form compare OR*

	Bit device			Word device							
	X	Y	M	K	H	KnX	KnY	KnM	T	C	D
S1									*	*	*
S2									*	*	*

Notes on operand usage: #：&、|、^
Please refer to the function specifications table for each device in series for the scope of device usage

16-bit command

—	—	—	—

32-bit command (9 STEP)

FOR※	Continuous execution type	—	—

Flag signal: none

Explanation

- ◆ S_1: data source device 1. S_2: data source device 2.
- ◆ This command compares the content of S_1 and S_2. Taking "FOR=" as an example, if the result of comparison is "equal," this command will be activated; but it will not be activated when the result is "unequal."
- ◆ The FOR* command can directly input floating point numerical values (for instance: F1.2) to the S_1, S_2 operands, or store floating-point numbers in register D for use in operations.
- ◆ This command can be used while directly connected with the busbar

API No.	32-bit commands	Conditions for activation	Conditions for inactivation
287	FOR＝	$S_1 = S_2$	$S_1 \neq S_2$
288	FOR＞	$S_1 > S_2$	$S_1 \leqq S_2$
289	FOR＜	$S_1 < S_2$	$S_1 \geqq S_2$
290	FOR＜＞	$S_1 \neq S_2$	$S_1 = S_2$
291	FOR＜＝	$S_1 \leqq S_2$	$S_1 > S_2$
292	FOR＞＝	$S_1 \geqq S_2$	$S_1 < S_2$

Example

- ◆ When X2 and M30 are both equal to "On," or the floating point number in register D100 (D101) is greater than or equal to F1.234, M60=On.

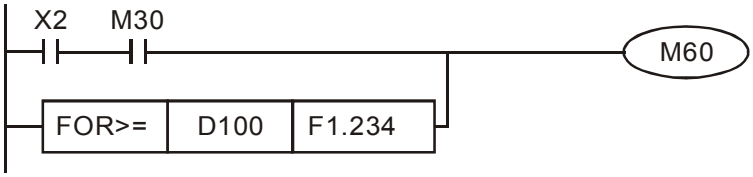

16-6-5 Detailed explanation of driver special applications commands

API 139	RPR	P	(S1) (S2)	Read servo parameter

	Bit device			Word device							
	X	Y	M	K	H	KnX	KnY	KnM	T	C	D
S1				*	*						*
S2											*

Notes on operand usage: none

16-bit command (5 STEP)			
RPR	Continuous execution type	RPRP	Pulse execution type
32-bit command			
—	—	—	—

Flag signal: none

Explanation

■ (S1): Parameter address of data to be read. (S2): Register where data to be read is stored.

API 140	WPR	P	(S1) (S2)	Write servo parameter

	Bit device			Word device							
	X	Y	M	K	H	KnX	KnY	KnM	T	C	D
S1				*	*						*
S2				*	*						*

Notes on operand usage: none

16-bit command (5 STEP)			
WPR	Continuous execution type	WPRP	Pulse execution type
32-bit command			
—	—	—	—

Flag signal: none

Explanation

■ (S1): Data to write to specified page. (S2): Parameter address of data to be written.

Example

■ When the data in the C2000 driver's parameter H01.00 is read and written to D0, data from H01.01 will be read and written to D1.
■ When M0=On, the content of D10 will be written to the C2000 driver parameter 04.00 (first speed of multiple speed levels).
■ When the parameter has been written successfully, M1017=On.
■ The C2000's WPR command does not support writing to the 20XX address, but the RPR command supports reading of 21XX, 22XX.

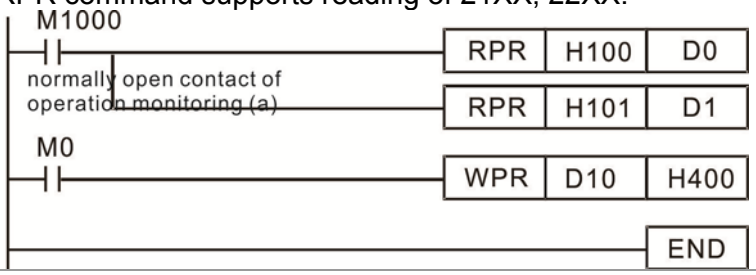

Recommendation Take care when using the WPR command. When writing parameters, because most parameters are recorded as they are written, these parameters may only be revised 109 times; a memory write error may occur if parameters are written more than 10^9 times.

Because the following commonly-used parameters have special processing, there are **no** restrictions on the number of times they may be written.

P00-10: Control method

P00-11: Speed mode selection

P00-12: P2P position mode

P00-13: Torque mode select

P00-27: User-defined value

P01-12: Acceleration time 1

P01-13: Deceleration time 1

P01-14: Acceleration time 2

P01-15: Deceleration time 2

P01-16: Acceleration time 3

P01-17: Deceleration time 3

P01-18: Acceleration time 4

P01-19: Deceleration time 4

P02-12: Select MI Conversion Time mode:

P02-18: Select MO Conversion Time mode:

P04-50 ~ P04-69: PLC register parameter 0 - 19

P08-04: Upper limit of integral

P08-05: PID output upper limit

P10-17: Electronic gear A

P10-18: Electronic gear B

P11-34: Torque command

P11-43: P2P highest frequency

P11-44: Position control acceleration time

P11-45: Position control deceleration time

Calculation of the number of times written is based on whether the written value is modified. For instance, writing the same value 100 times at the same time counts as writing only once.

When writing a PLC program, if unsure of usage of the WPR command, we recommend that you use the WPRP command.

API 141		**FPID**	**P**	(S1) (S2) (S3) (S4)	Driver PID control mode

	Bit device			Word device							
	X	Y	M	K	H	KnX	KnY	KnM	T	C	D
S1				*	*						*
S2				*	*						*
S3				*	*						*
S4				*	*						*

Notes on operand usage: none

16-bit command (9 STEP)			
FPID	Continuous execution type	FPIDP	Pulse execution type
32-bit command			
–	–	–	–

Flag signal: none

Explanation

- (S1): PID reference target value input terminal select. (S2): PID function proportional gain P. (S3): PID function integral time I. (S4): PID function differential time D.
- The FPID command can directly control the driver's feedback control of PID parameter 08-00 PID reference target value input terminal selection, 08-01 proposal gain P, 08-02 integral time I, and 08-03 differential time D.

Example

- When M0=On, the set PID reference target value input terminal selection is 0 (no PID function), the PID function proportional gain P is 0, the PID function integral time I is 1 (units: 0.01 sec.), and the PID function differential time D is 1 (units: 0.01 sec.).
- When M1=On, the set PID reference target value input terminal selection is 0 (no PID function), the PID function proportional gain P is 1 (units: 0.01), the PID function integral time I is 0, and the PID function differential time D is 0.
- When M2=On, the set PID reference target value input terminal selection is 1 (target frequency input is controlled from the digital keypad), the PID function proportional gain P is 1 (units: 0.01), the PID function integral time I is 0, and the PID function differential time D is 0.
- D1027: Frequency command after PID operation.

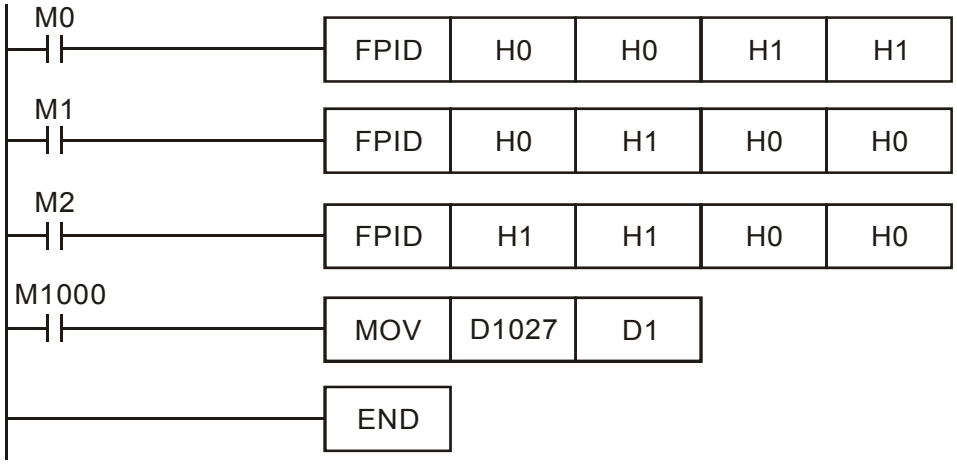

API 142		**FREQ**	**P**	(S1) (S2) (S3)	Driver speed control mode

	Bit device			Word device							
	X	Y	M	K	H	KnX	KnY	KnM	T	C	D
S1				*	*						*
S2				*	*						*
S3				*	*						*

Notes on operand usage: none

16-bit command (7 STEP)			
FREQ	Continuous execution type	FREQP	Pulse execution type
32-bit command			
—	—	—	—

Flag signal: M1015

Explanation

- (S1): Frequency command. (S2): Acceleration time. (S3): Deceleration time
- S2,S3: In acceleration/deceleration time settings, the number of decimal places is determined by the definitions of Pr01-45.

Example
When 01-45=0: units of 0.01 sec.
The setting of 50 for S2 (acceleration time) in the ladder diagram below implies 0.5 sec, and the S3 (deceleration time) setting of 60 implies 0.6 sec

- The FREQ command can control driver frequency commands, and acceleration and deceleration time; it also uses special register control actions, such as:
  M1025: Control driver RUN(On)/STOP(Off) (RUN requires Servo On (M1040 On) to be effective)
  M1026: Control driver operating direction FWD(Off)/REV(On)
  M1040: Control Servo On/Servo Off.
  M1042: Trigger quick stop (ON)/does not trigger quick stop (Off).
  M1044: Pause (On)/release pause (Off)
  M1052: Lock frequency (On)/release lock frequency (Off)

Example

- M1025: Driver RUN(On)/STOP(Off), M1026: driver operating direction FWD(Off)/REV(On). M1015: frequency reached.
- When M10=On, sets the driver frequency command K300(3.00Hz), with an acceleration/deceleration time of 0.
  When M11=On, sets the driver frequency command K3000 (30.00Hz), with an acceleration time of 50 (0.5 sec.) and deceleration time of 60 (0.6 sec.). (When 01-45=0)
- When M11=Off, the driver frequency command will now change to 0

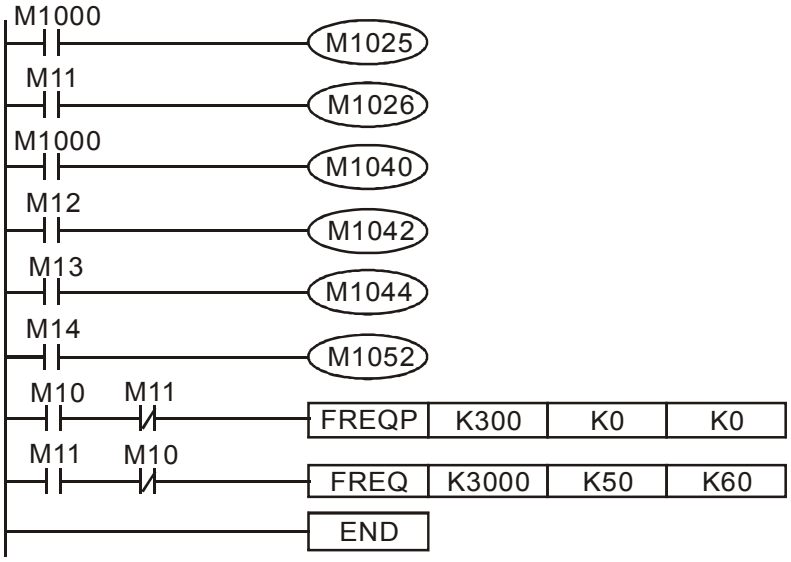

- Parameter 09-33 are defined on the basis of whether reference commands have been cleared before PLC operation

  Bit 0 : Prior to PLC scanning procedures, whether the target frequency has been cleared is 0. (This will be written to the FREQ command when the PLC is On)

Bit 1 : Prior to PLC scanning procedures, whether the target torque has been cleared is 0. (This will be written to the TORQ command when the PLC is On)

Bit 2 : Prior to PLC scanning procedures, whether speed limits in the torque mode have been cleared is 0. (This will be written to the TORQ command when the PLC is On)

Example: When using r to write a program,

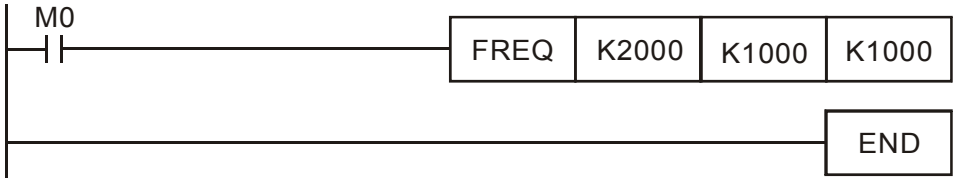

if we force M0 to be 1, the frequency command will be 20.00 Hz; but when M0 is set as 0, there will be a different situation.

Case 1: When the 09-33 bit 0 is 0, and M0 is set as 0, the frequency command will remain at 20.00Hz.

Case 2: When the 09-33 bit 0 is 1, and M0 is set as 0, the frequency command will change to 0.00Hz

The reason for this is that when the 09-33 bit 0 is 1 prior to PLC scanning procedures, the frequency will first revert to 0.

When the 09-33 bit 0 is 0, the frequency will not revert to 0.

API 263		**TORQ**	P	(S1) (S2)	Driver torque control mode

	Bit device			Word device							
	X	Y	M	K	H	KnX	KnY	KnM	T	C	D
S1				*	*						*
S2				*	*						*

Notes on operand usage: none

16-bit command (5 STEP)			
TORQ	Continuous execution type	TORQ P	Pulse execution type
32-bit command			
—	—	—	—

Flag signal: M1063

Explanation

- (S1): Torque command (numbered, no more than one digit). (S2): Speed limit.
- The TORQ command can control the driver torque command and speed limits; it also uses special register control actions, such as:
  M1040: Controls Servo On/Servo Off. When Servo is ON, if a TORQ command is executed, the torque will output the torque defined by the TORQ command, and the frequency restrictions will similarly be controlled by the TORQ command.

Example

- M1040: Control Servo On/Servo Off. M1063: set torque attained. D1060 is the mode controls. D1053 is the actual torque.
- When M0=Off, set the driver torque command K+500 (+50.0%), rotational speed restrictions is 3000 (30Hz).
- When M0=On, sets the driver torque command K-300 (-30.0%), rotational speed restrictions is 3000 (30Hz).
- When M10=On, driver began output torque command.
- When set torque is attained, M1063 will go On; this flag usually jumps continuously, however.

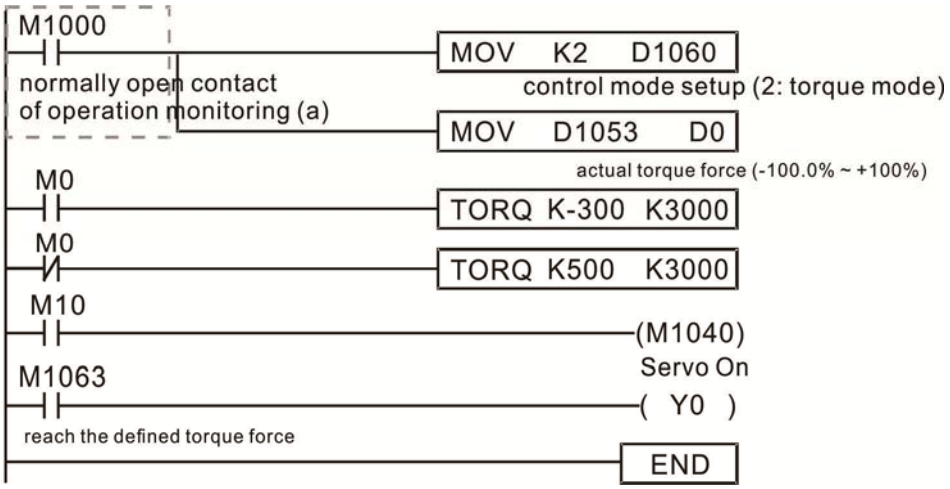

- Parameter 09-33 are defined on the basis of whether reference commands have been cleared before PLC operation

  Bit 0 : Prior to PLC scanning procedures, whether the target frequency has been cleared is 0. (This will be written to the FREQ command when the PLC is On)

  Bit 1 : Prior to PLC scanning procedures, whether the target torque has been cleared is 0. (This will be written to the TORQ command when the PLC is On)

  Bit 2 : Prior to PLC scanning procedures, whether speed limits in the torque mode have been cleared is 0. (This will be written to the TORQ command when the PLC is On)

Example:

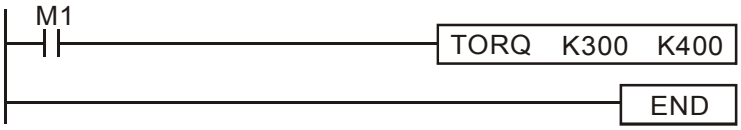

If we now force M1 to be 1, the torque command will be K+300 (+30%), and the speed limit will be 400 (40Hz). But when M1 is set as 0, there will be a different situation

Case 1: When bit 1 and bit 2 of 09-33 are both set as 0, and M1 is set as 0, the torque command will remain at +30%, and the speed limit will be set as 40Hz.

Case 2: When bit 1 and bit 2 of 09-33 are both 1, and M1 is set as 0, the torque command will revert 0%, and the speed limit will be set as 0Hz.

API 262		**DPOS**	**P**	(S1)	Driver point-to-point control

	Bit device			Word device							
	X	Y	M	K	H	KnX	KnY	KnM	T	C	D
				*	*						*

Notes on operand usage: none

16-bit command			
—	—	—	—

32-bit command (5 STEP)			
DPOS	Continuous execution type	DPOSP	Pulse execution type

Flag signal: M1064, M1070

Explanation

- (S1): Target (must have a number).
- The DPOS command can control the driver's position commands, and employs special register control actions, such as:
  M1040: Control Servo On/Servo Off. M1055 search for origin. M1048 move to new position. If the control mode is position mode (D1060 = 1), and the converter is in the Servo ON state (M1040 = 1), if the DPOS command is executed, the driver will move to a new position in conjunction with activation of M1048 once (OFF to ON).

Example

- M1040: Control Servo On/Servo Off. M1064: set position attained. D1060 is the mode control. D1051(L) and D1052(H) are the actual position points.
- When X0=On, M1040 will be On (Servo On).
- When X1=On, sets DPOS position as +300000, and M1048 will change to On (move to new position) after a delay of 1 sec. Check whether the value of D1051 has changed at this time; after the set position point has been reached, M1064 will go On, and Y0 will output On.

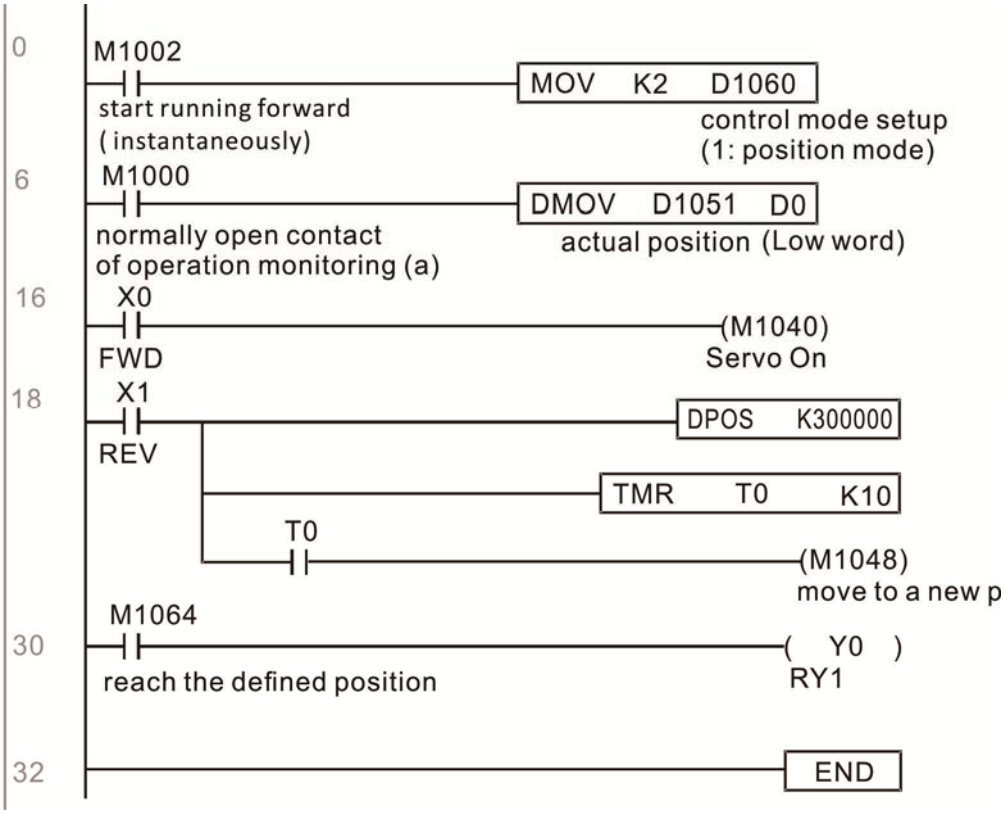

API 261		**CANRX**	**P**	(S1) (S2) (S3) (D)	Read CANopen slave station data

	Bit device			Word device							
	X	Y	M	K	H	KnX	KnY	KnM	T	C	D
S1				*	*						
S2				*	*						
S3				*	*						
D									*	*	*

Notes on operand usage: none

16-bit command (9 STEP)			
CANRX	Continuous execution type	CANRXP	Pulse execution type
32-bit command			
—	—	—	—

Flag signal

Explanation

- (S1): Slave station number. (S2): Main index.. (S3): Subindex+bit length. (D): Preset address.
- The CANRX command can read the index of the corresponding slave station. When it is executed, it will send the SDO message format to the slave station. M1066 and M1067 will both be 0 at that time, and M1066 will be set as 1 after reading. If the slave station gives the correct response, it will write the value to the preset register, and set M1067 as 1. If the slave station has a response error, M1067 will be set as 0, and an error message will be recorded to D1076 to D1079.

Example

M1002: When the PLC runs, the command will be triggered once and will set K4M400 = K1

Afterwards, each time M1066 is 1, it will switch to a different message.

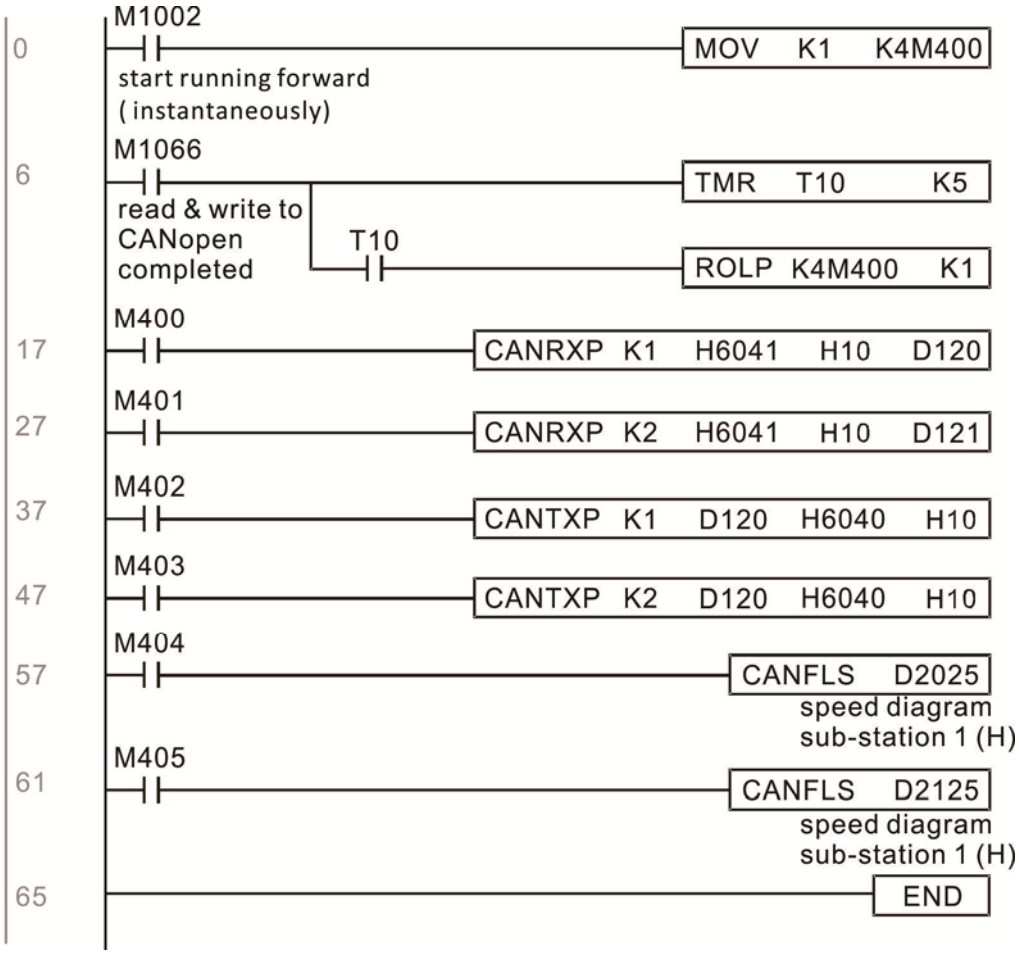

API 264		**CANTX**	P	(S1) (S2) (S3) (S4)	Write CANopen slave station data

	Bit device			Word device							
	X	Y	M	K	H	KnX	KnY	KnM	T	C	D
S1				*	*						
S2				*	*				*	*	*
S3				*	*						
S4				*	*						

Notes on operand usage: none

16-bit command (9 STEP)			
CANTX	Continuous execution type	CANTXP	Pulse execution type
32-bit command			
—	—	—	—

Flag signal

Explanation

- (S1): Slave station number. (S2): Address to be written. (S3): Main index. (S4): Subindex+bit length.
- The CANTX command can write a value to the index of the corresponding slave station. When it is executed, it will send the SDO message format to the slave station. M1066 and M1067 will both be 0 at that time, and M1066 will be set as 1 after reading. If the slave station gives the correct response, it will write the value to the preset register, and set M1067 as 1. If the slave station has a response error, M1067 will be set as 0, and an error message will be recorded to D1076 to D1079.

API 265		CANFLS	P	(D)	Refresh special D corresponding to CANopen

	Bit device			Word device							
	X	Y	M	K	H	KnX	KnY	KnM	T	C	D
D				*	*						

Notes on operand usage: none

16-bit command (3 STEP)

CANFLS	Continuous execution type	CANFLSP	Pulse execution type

32-bit command

—	—	—	—

Flag signal

Explanation

- (D): Special D to be refreshed.
- The CANFLS command can refresh special D commands. When is a read only attribute, executing this command will send a message equivalent to that of CANRX to the slave station, and the number of the slave station will be transmitted back and refreshed to this special D. When there is a read/write attribute, executing this command will send a message equivalent to that of CANTX to the slave station, and the value of this special D will be written to the corresponding slave station.
- When M1066 and M1067 are both 0, and M1066 is set as 1 after reading, if the slave station gives a correct response, the value will be written to the designated register, and M1067 will be set as 1. If the slave station's response contains an error, then M1067 will be set as 0, and an error message will be recorded to D1076-D1079.

API 320	D	ICOMR	P	(S1) (S2) (S3) (D)	Internal communications read

	Bit device			Word device							
	X	Y	M	K	H	KnX	KnY	KnM	T	C	D
S1				*	*						*
S2				*	*						*
S3				*	*						*
D				*	*						*

Notes on operand usage: none

16-bit command (9 STEP)

ICOMR	Continuous execution type	ICOMRP	Pulse execution type

32-bit command (17 STEP)

DICOMR	Continuous execution type	DICOMRP	Pulse execution type

Flag signal: M1077 M1078 M1079

Explanation

(S1): Selection of slave device. (S2): Device selection (0: converter, 1: internal PLC). (S3): Read address. (D): Saving target.

- The ICOMR command can obtain the slave station's converter and the internal PLC's register value.

API 321	D	**ICOMW**	P	(S1) (S2) (S3) (D)	Internal communications write

	Bit device			Word device							
	X	Y	M	K	H	KnX	KnY	KnM	T	C	D
S1				*	*						*
S2				*	*						*
S3				*	*						*
D				*	*						*

Notes on operand usage: none

16-bit command (9 STEP)

ICOMW	Continuous execution type	ICOMWP	Pulse execution type

32-bit command (17 STEP)

DICOMW	Continuous execution type	DICOMWP	Pulse execution type

Flag signal: M1077 M1078 M1079

Explanation

(S1): Selection of slave device. (S2): Device selection (0: converter, 1: internal PLC). (S3): Read address. (D): Saving target.

- The ICOMW command write a value to the slave station's converter and the internal PLC's register.

Example

Please refer to the following example:

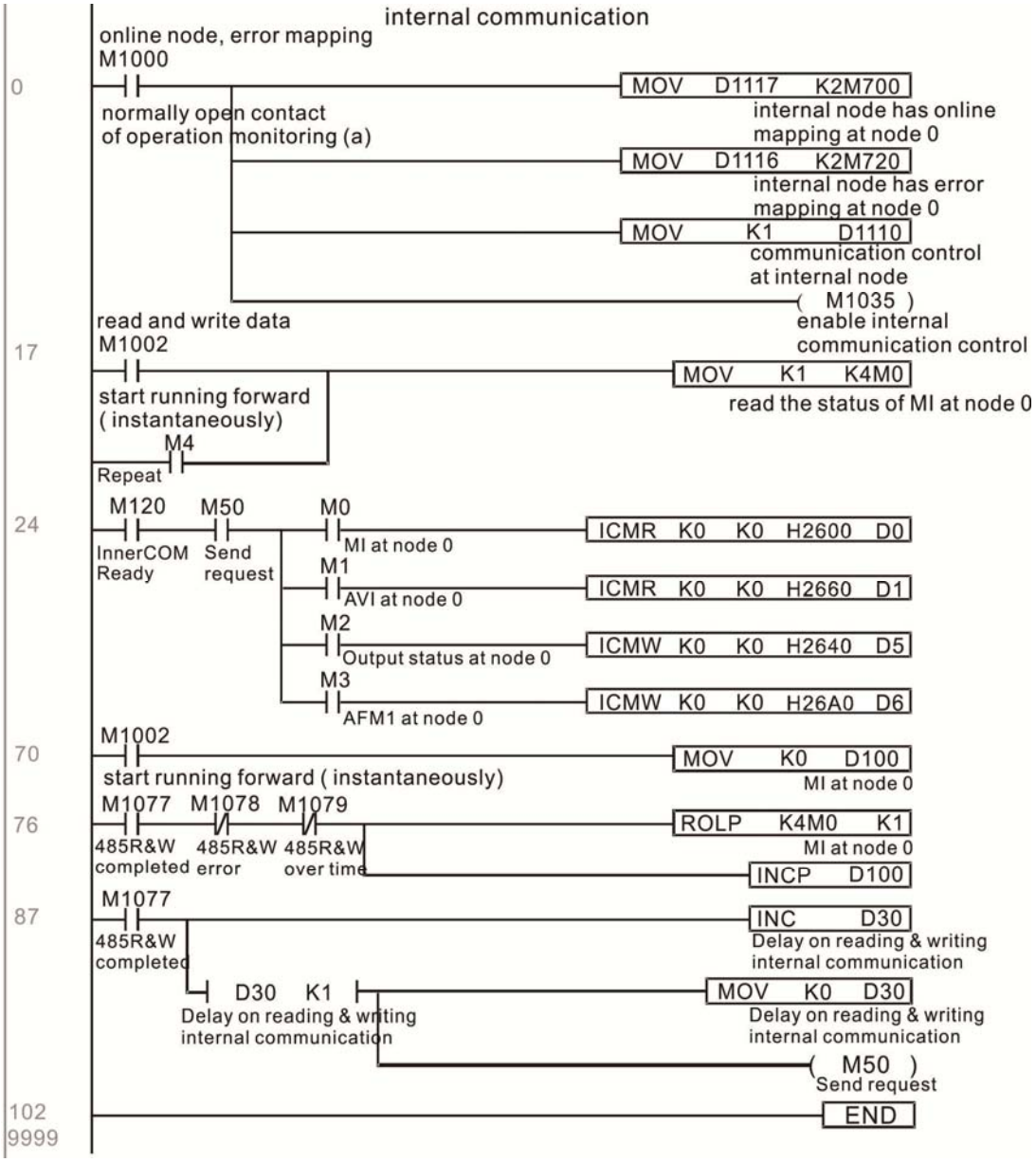

16-7 Error display and handling

Code	ID	Descript	Recommended handling approach
PLrA	47	RTC time check	Turn power on and off when resetting the keypad time
PLrt	49	(incorrect RTC mode)	Turn power on and off after making sure that the keypad is securely connected
PLod	50	Data writing memory error	Check whether the program has an error and download the program again
PLSv	51	Data write memory error during program execution	Restart power and download the program again
PLdA	52	Program transmission error	Try uploading again; if the error persists, sent to the manufacturer for service
PLFn	53	Command error while downloading program	Check whether the program has an error and download the program again
PLor	54	Program exceeds memory capacity or no program	Restart power and download the program again
PLFF	55	Command error during program execution	Check whether the program has an error and download the program again
PLSn	56	Check code error	Check whether the program has an error and download the program again
PLEd	57	Program has no END stop command	Check whether the program has an error and download the program again
PLCr	58	MC command has been used continuously more than nine times	Check whether the program has an error and download the program again
PLdF	59	Download program error	Check whether the program has an error and download again
PLSF	60	PLC scan time excessively long	Check whether the program code has a writing error and download again

16- 8 CANopen Master control applications

Control of a simple multi-axis application is required in certain situations. If the device supports the CANopen protocol, a C2000 can serve as the master in implementing simple control (position, speed, homing, and torque control). The setting method comprises the following seven steps:

Step 1: Activating CANopen Master functions

1. Parameter 09-45=1 (initiates Master functions); restart power after completing setting, the status bar on the KPC-CC01 digital keypad will display "CAN Master".
2. Parameter 00-02=6 reset PLC (please note that this action will reset the program and PLC registers to the default values)
3. Turn power off and on again.
4. Use the KPC-CC01 digital keypad to set the PLC control mode as **"PLC Stop"** (if the KPC-CE01 digital keypad is used, set as "PLC 2"; if a newly-introduced driver is used, the blank internal PLC program will cause a PLFF warning code to be issued).

Step 2: Master memory settings

1. After connecting the 485 communications cable, use WPL Soft to set the PLC **status** as Stop (if the PLC mode has been switched to the **"PLC Stop"** mode, the PLC **status** should already be Stop)
2. Set the address and corresponding station number of the slave station to be controlled. For instance, if it is wished to control two slave stations (a maximum of 8 stations can be controlled simultaneously), and the station numbers are 21 and 22, it is only necessary to set D2000 and D2100 as 20 and 21, and then set D2200, D2300, D2400, D2500, D2600, and D2700 as 0. The setting method involves use of the PLC's WPL editing software WPL as follows:
   - Open WPL and implement **communications > register edit (T C D)** function

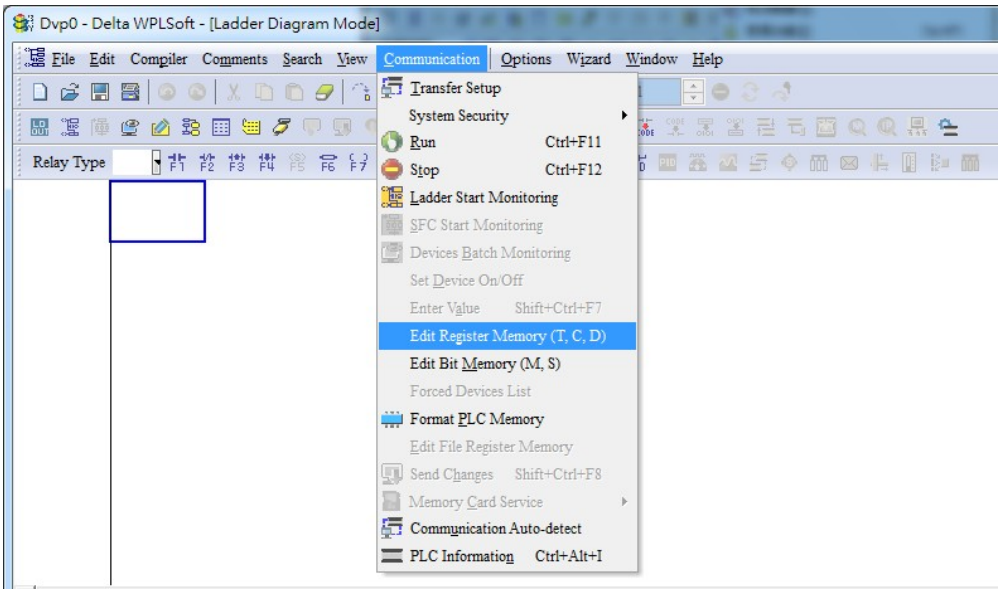

■ After leaving the PLC register window, the register setting screen will appear, as shown below:

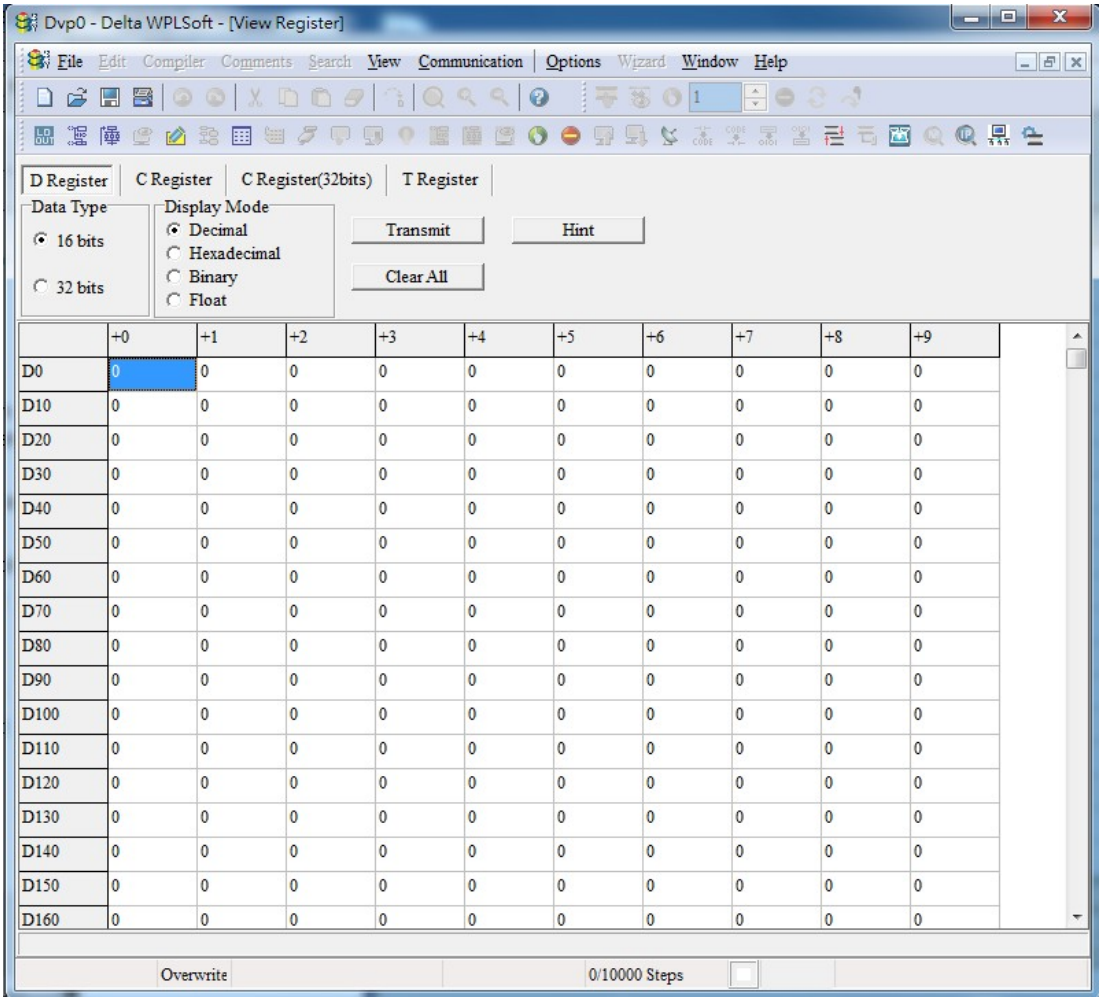

If there is a new PLC program and no settings have yet been made, you can read default data from the converter, and merely edit it to suit the current application. If settings have already been made, however, the special D in the CANopen area will display the saved status (the CANopen D area is located at D1090 to D1099 and D2000 to D2799). Assuming it is a new program, we will first read the default data from the converter; check the communications format if there is no communications link (the default PLC station number is 2, 9600, 7N2, ASCII). Perform the following steps: 1. Switch the PLC to Stop status; 2. Press the transmit button; 3. click on read memory after exiting the window; 4. Ignore D0-D399; and 5. click on the confirm button.)

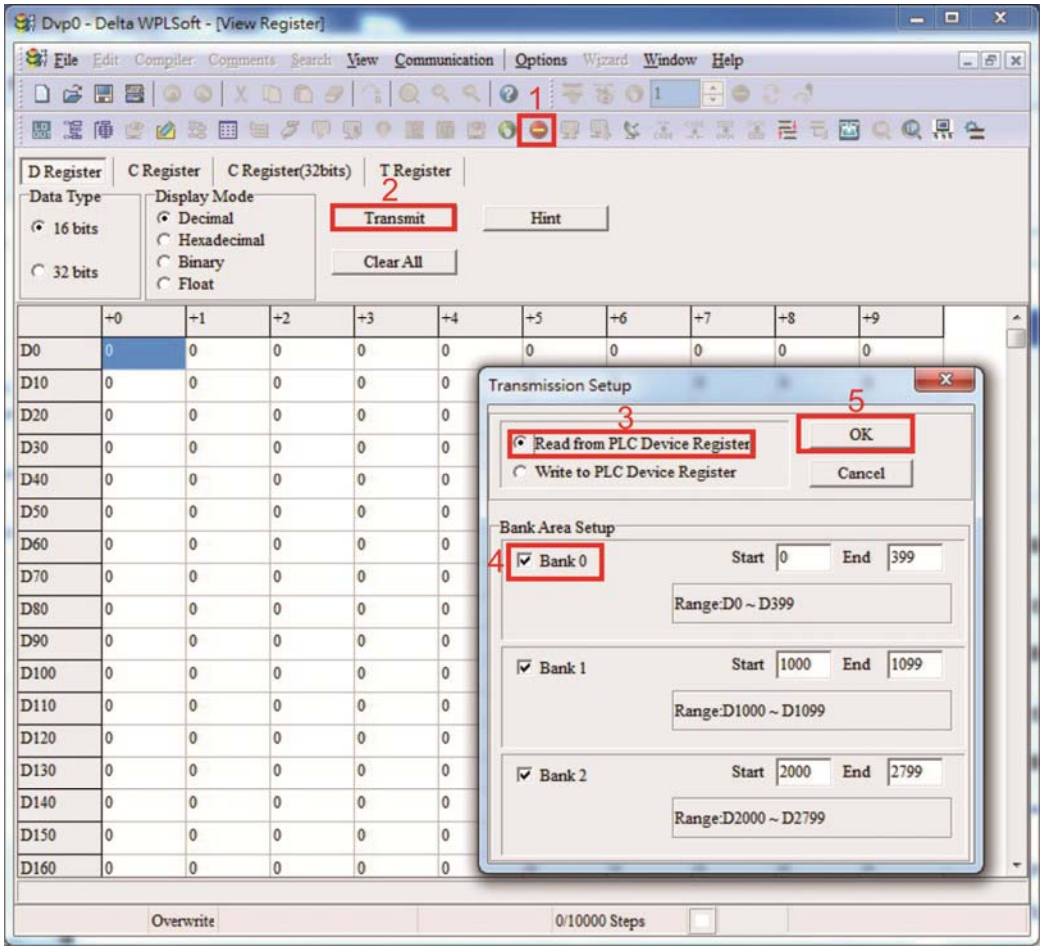

After reading the data, it is necessary to perform some special D settings. Before proceeding, we will first introduce the special D implications and setting range. The CANopen Master's special D range is currently D1070 to D1099 and D2000 to D2799; this range is divided into 3 blocks:

The first block is used to display CANopen's current status, and has a range of D1070 to D1089;

the second block is used for CANopen's basic settings, and has a range of D1090 to D1099;
the third block is the slave station mapping and control area, and has a range of D2000 to D2799;
These areas are therefore introduced as follows:

The first contains the current CANopen status display:
When the master initializes a slave station, we can from find out from D1070 whether configuration of the slave device has been completed; we can find out whether an error occurred in the configuration process from D1071 and whether the configuration is inappropriate from D1074.
After entering normal control, we can find out whether the slave device is offline from D1073. In addition, we can check the slave device's read/write information using the CANRX, CANTX, and CANFLS commands; error information can be obtained from D1076 to D1079 if there has been a read/write failure.

Special D	Description of Function	R/W
D1070	Channel opened by CANopen initialization (bit0=Machine code0 …….)	R
D1071	Error channel occurring in CANopen initialization process (bit0=Machine code0 …….)	R
D1072	Reserved	-
D1073	CANopen break channel (bit0=Machine code0 …….)	R

Special D	Description of Function	R/W
D1074	Error code of master error 0: No error 1: Slave station setting error 2: Synchronizing cycle setting error (too small)	R
D1075	Reserved	-
D1076	SDO error message (main index value)	R
D1077	SDO error message (secondary index value)	R
D1078	SDO error message (error code L)	R
D1079	SDO error message (error code H)	R

The second area is for basic CANopen settings: (the PLC must have **stopped** when this area is used to make settings)

We must set the information exchange time for the master and slave station,

Special D	Description of Function	Default:	R/W
D1090	Synchronizing cycle setting	4	RW

Use D1090 to perform settings; setting time relationships include:

$$\text{Sync time} \geq \frac{1M}{Rate} * \frac{N}{4}$$

N: TXPDO + RXPDO

For instance, when communications speed is 500K, TXPDO + RXPDO have 8 sets, and synchronizing time will require more than 4 ms

We must also define how many slave stations will be open. D1091 is the channel for defining station opening, and D2000+100*n is the station number defining this channel. See the detailed explanation below.

Slave station number **n**=0-7

Special D	Description of Function	R/W
D1091	Sets slave station On or Off (bit 0-bit 7 correspond to slave stations number 0-7)	RW
D2000+100***n**	Slave station number	RW

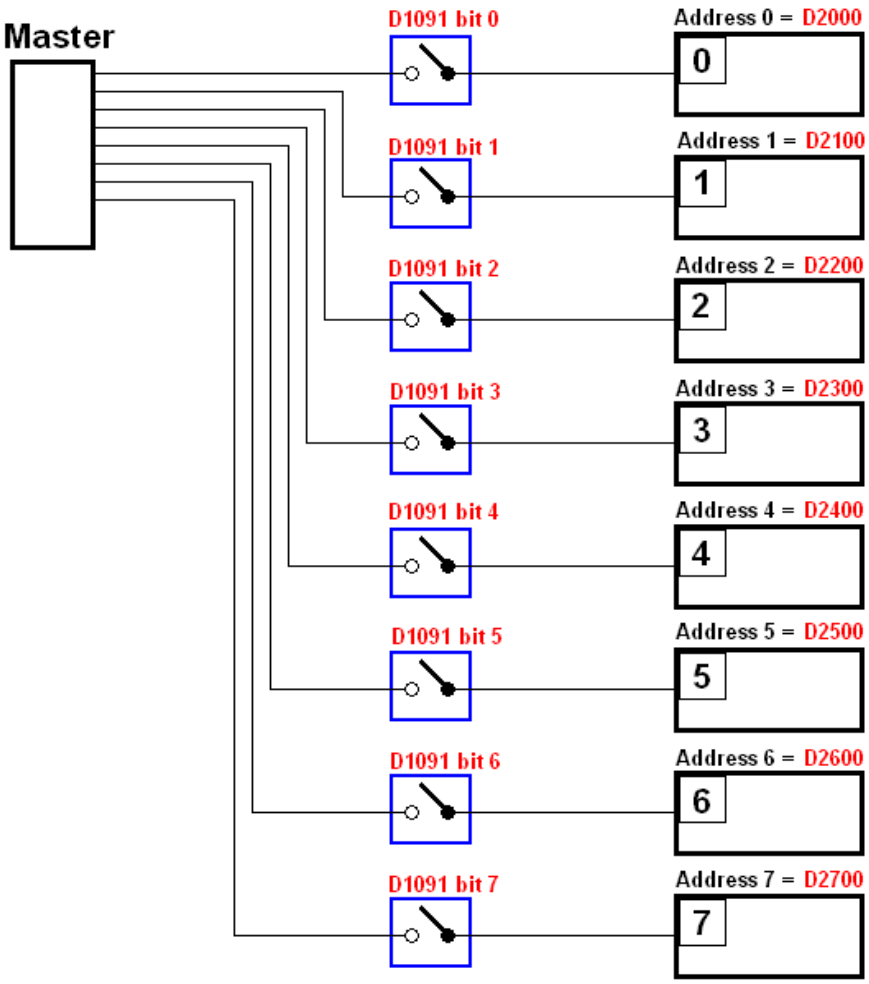

If slave devices have a slow start-up, the master can delay for a short time before performing slave station configuration; this time delay can be set via D1092.

Special D	Description of Function	Default:	R/W
D1092	Delay before start of initialization	0	RW

With regard to slave device initialization, a delay time can be set to judge whether failure has occurred. If the communications speed is relatively slow, the delay time can be adjusted to judge whether initialization has been completed, which will ensure that there is time to perform slave device initialization.

Special D	Description of Function	Default:	R/W
D1099	Initialization completion delay time Setting range: 1 to 60000 sec	15 sec.	RW

After communication is successful, the system must detect whether there is a break in communications with the slave station. D1093 is used to set detection time, and D1094 sets the number of consecutive errors that will trigger a break error.

Special D	Description of Function	Default:	R/W
D1093	Break time detection	1000ms	RW
D1094	Break number detection	3	RW

The packet type transmitted by PDO is set before establishing normal communications and generally does not require adjustment.

Special D	Description of Function	Default:	R/W

Special D	Description of Function	Default:	R/W
D1097	Corresponding real-time transmission type (PDO) Setting range: 1~240	1	RW
D1098	Corresponding real-time receiving type (PDO) Setting range: 1~240	1	RW

The third block is the slave station mapping and control area.

CANopen provides a PDO method to perform mapping of the master and slave station memory, and enables the master to directly access read/write data in a certain memory area. The master will automatically perform data exchange with the corresponding slave device, and the read/write values can be seen directly from the special D area after real-time exchange (M1034 = 1 time) has been established. The C2000 currently supports real-time mapping of four PDOs, and there are two types of PDO RXPDO (reads slave device information) and TXPDO (writes to slave device). In addition, in order to facilitate control, the C2000 cannot perform mapping of commonly-used registers; the following is an overview of the current PDO mapping situation:

TX PDO							
PDO4 (Torque)		**PDO3 (Position)**		**PDO2 (Remote I/O)**		**PDO1 (Speed)**	
Description	Special D	Description	Special D	Description	Special D	Description	Special D
Controller Word	D2008+100*n	Controller Word	D2008+100*n	Slave device DO	D2027+100*n	Controller Word	D2008+100*n
Target torque	D2017+100*n	Target	D2020+100*n D2021+100*n	Slave device AO1	D2031+100*n	Target speed	D2012+100*n
Control method	D2010+100*n	Control method	D2010+100*n	Slave device AO2	D2032+100*n		
				Slave device AO3	D2033+100*n		

RXPDO							
PDO4 (Torque)		**PDO3 (Position)**		**PDO2 (Remote I/O)**		**PDO1 (Speed)**	
Description	Special D	Description	Special D	Description	Special D	Description	Special D
Mode word	D2009+100*n	Mode word	D2009+100*n	Slave device DI	D2026+100*n	Mode word	D2009+100*n
Actual torque	D2018+100*n	Actual position	D2022+100*n D2023+100*n	Slave device AI1	D2028+100*n	Actual frequency	D2013+100*n
Actual mode	D2011+100*n	Actual mode	D2011+100*n	Slave device AI2	D2029+100*n		
				Slave device AI3	D2030+100*n		

Because usage requires only simple to open the corresponding PDO, where TXPDO employs D2034+100*n settings and RXPDO employs D2067+100*n settings.

These two special D areas are defined as follows:

	PDO4		PDO3		PDO2		PDO1	
Default definition	Torque		Position		Remote I/O		Speed	
bit	15	14 ~ 12	11	10 ~ 8	7	6 ~ 4	3	2 ~ 0
Definition	En	Length:	En	Length:	En	Length:	En	Length:

En: indicates whether PDO is used

Length: indicates mapping of several variables

In a simple example, if we wish to control a C2000 slave device and cause it to operate in speed mode, we only have to make the following settings:

D2034+100*n =000Ah

Length:	TX PDO							
	PDO4		PDO3		PDO2		PDO1	
	Description	Special D	Description	Special D	Description	Special D	Description	Special D
1	Controller Word	D2008+100*n	Controller Word	D2008+100*n	Slave device DO	D2027+100*n	Controller Word	D2008+100*n
2	Target torque	D2017+100*n	Target	D2020+100*n D2021+100*n	Slave device AO1	D2031+100*n	Target speed	D2012+100*n
3	Control method	D2010+100*n	Control method	D2010+100*n	Slave device AO2	D2032+100*n		
4					Slave device AO3	D2033+100*n		

	PDO4		PDO3		PDO2		PDO1	
Definition	Torque		Position		Remote I/O		Speed	
bit	15	14 ~ 12	11	10 ~ 8	7	6 ~ 4	3	2 ~ 0
Definition	0	0	0	0	0	0	1	2

D2067+100*n =000Ah

Length:	TX PDO							
	PDO4		PDO3		PDO2		PDO1	
	Description	Special D	Description	Special D	Description	Special D	Description	Special D
1	Controller Word	D2009+100*n	Controller Word	D2009+100*n	Slave device DI	D2026+100*n	Controller Word	D2009+100*n
2	Actual torque	D2018+100*n	Actual position	D2022+100*n D2023+100*n	Slave device AI1	D2028+100*n	Actual frequency	D2013+100*n
3	Actual mode	D2011+100*n	Actual mode	D2011+100*n	Slave device AI2	D2029+100*n		
4					Slave device AI3	D2030+100*n		

	PDO4		PDO3		PDO2		PDO1	
Definition	Torque		Position		Remote I/O		Speed	
bit	15	14 ~ 12	11	10 ~ 8	7	6 ~ 4	3	2 ~ 0
Definition	0	0	0	0	0	0	1	2

Switch the PLC to Run after completing settings. Now wait for successful initialization of CANopen (M1059 = 1 and M1061 = 0), and then initiate CANopen memory mapping (M1034 = 1). The control word and frequency command will now automatically refresh to the corresponding slave device (D2008+n*100 and D2012+n*100), and the slave device's status word and currently frequency will also be automatically sent back to the master station (D2009+n*100 and D2013+n*100). This also illustrates how the master can handle these tasks through read/write operations in the special D area.

Furthermore, it should be noted that the remote I/O of PDO2 can obtain the slave device's current DI and AI status, and can also control the slave device's DO and AO status. Nevertheless, after introducing a fully automatic mapping special D, the C2000 CANopen master also provides additional information refreshes. For instance, while in speed mode, acceleration/deceleration settings may have been refreshed. The special D therefore also stores some seldom-used real-time information, and these commands can be refreshed using the CANFLS command. The following is the C2000's current CANopen master data conversion area, which has a range of D2001+100*n - D2033+100*n, as shown below:

1. The range of n is 0-7
2. ●Indicates PDOTX, ▲Indicates PDORX; unmarked special D can be refreshed using the CANFLS command

Special D	Description of Function	Default:	PDO Default:				R/W
			1	2	3	4	

D2000+100*n	Station number n of slave station Setting range: 0~127 0: No CANopen function	0					RW
D2002+100*n	Manufacturer code of slave station number n (L)	0					R
D2003+100*n	Manufacturer code of slave station number n (H)	0					R
D2004+100*n	Manufacturer's product code of slave station number n (L)	0					R
D2005+100*n	Manufacturer's product code of slave station number n (H)	0					R

Basic definitions

Special D	Description of Function	Default:	PDO Default:				R/W
			1	2	3	4	
D2006+100*n	Communications break handling method of slave station number n	0					RW
D2007+100*n	Error code of slave station number n error	0					R
D2008+100*n	Control word of slave station number n	0	●		●	●	RW
D2009+100*n	Status word of slave station number n	0	▲		▲	▲	R
D2010+100*n	Control mode of slave station number n	2					RW
D2011+100*n	Actual mode of slave station number n	2					R

Velocity Control

Special D	Description of Function	Default:	PDO Default:				R/W
			1	2	3	4	
D2001+100*n	Torque restriction on slave station number n	0					RW
D2012+100*n	Target speed of slave station number n (rpm)	0	●				RW
D2013+100*n	Actual speed of slave station number n (rpm)	0	▲				R
D2014+100*n	Error speed of slave station number n (rpm)	0					R
D2015+100*n	Acceleration time of slave station number n (ms)	1000					RW
D2016+100*n	Deceleration time of slave station number n (ms)	1000					RW

Torque control

Special D	Description of Function	Default:	PDO Default:				R/W
			1	2	3	4	
D2017+100*n	Target torque of slave station number n(-100.0%~+100.0%)	0				●	RW
D2018+100*n	Actual torque of slave station number n(XX.X%)	0				▲	R
D2019+100*n	Actual current of slave station number n(XX.XA)	0					R

Position control

Special D	Description of Function	Default:	PDO Default:				R/W
			1	2	3	4	
D2020+100*n	Target of slave station number n (L)	0			●		RW
D2021+100*n	Target of slave station number n (H)	0					RW
D2022+100*n	Actual position of slave station number n (L)	0			▲		R
D2023+100*n	Actual position of slave station number n (H)	0					R

D2024+100*n	Speed chart of slave station number n (L)	10000					RW
D2025+100*n	Speed chart of slave station number n (H)	0					RW

Remote I/O

Special D	Description of Function	Default:	PDO Default:				R/W
			1	2	3	4	
D2026+100*n	MI status of slave station number n	0		▲			R
D2027+100*n	MO setting of slave station number n	0		●			RW
D2028+100*n	AI1 status of slave station number n	0		▲			R
D2029+100*n	AI2 status of slave station number n	0		▲			R
D2030+100*n	AI3 status of slave station number n	0		▲			R
D2031+100*n	AO1 setting of slave station number n	0		●			RW
D2032+100*n	AO2 setting of slave station number n	0		●			RW
D2033+100*n	AO3 setting of slave station number n	0		●			RW

After gaining an understanding of special D definitions, we return to setting steps. After entering the values corresponding to D1090 to D1099, D2000+100*n, D2034+100*n and D2067+100*n, we cannot begin to perform downloading, which is performed in accordance with the following steps: (1. D2000 and D2100 are set as 20 and 21, and D2200, D2300, D2400, D2500, D2600, and D2700 are set as 0; if a setting of 0 causes problems, D1091 can be set as 3, and slave stations 2 to 7 can be closed. 2. Switch PLC to Stop status. 3. Press the transmit button. 4. click on write memory after exiting the window. 5. Ignore D0-D399. 6. Change the second range to D1090-D1099. 7. Click on Confirm.)

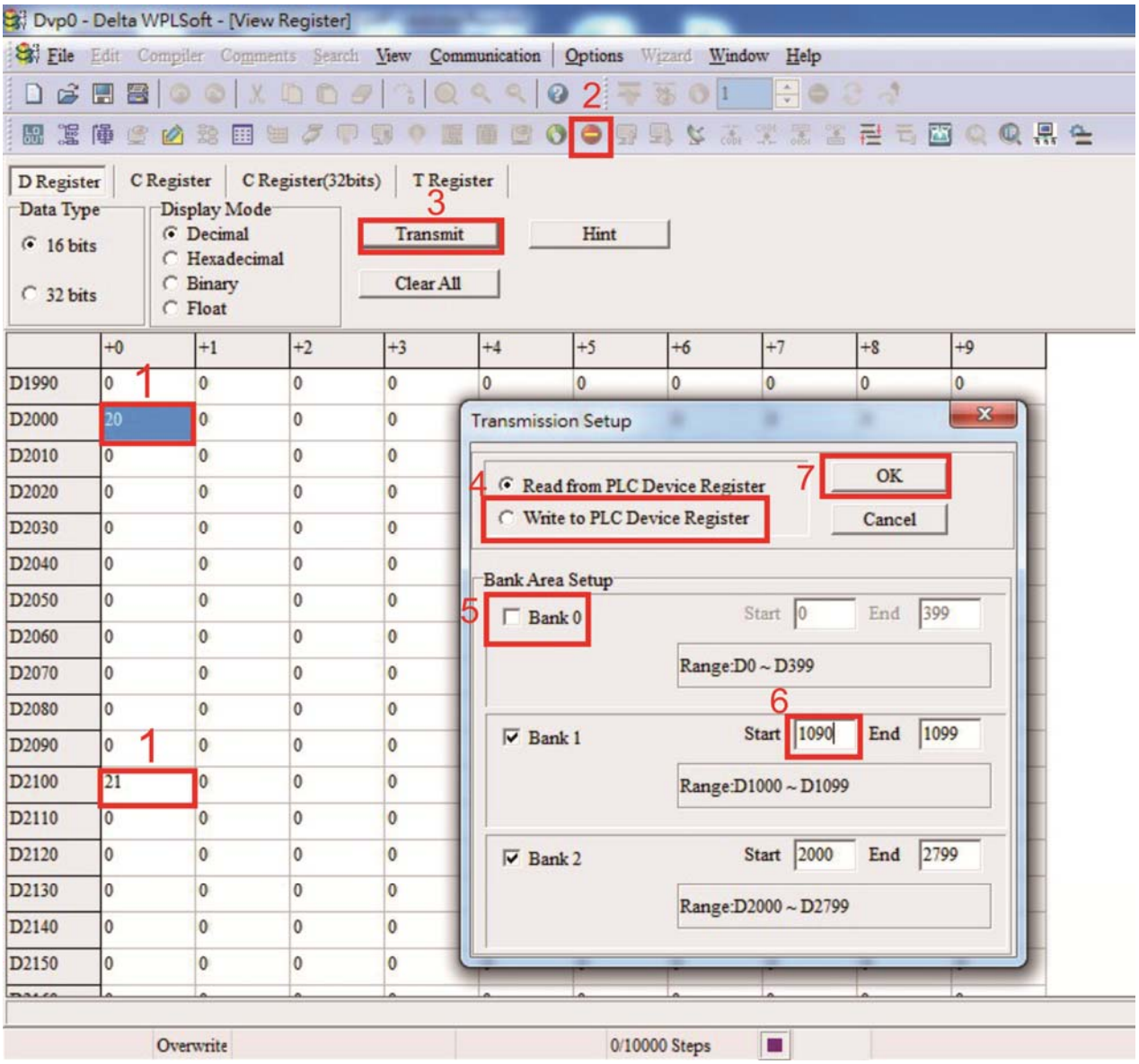

■ Another method can be used to set D1091: Determine which of slave stations 0 to 7 will not be needed, and set the corresponding bits to 0. For instance, if it is not necessary to control slave stations 2, 6 and 7, merely set D1091 = 003B, and the setting method is the same as described above: Use WPL to initiate **communications > use register edit (T C D)** function to perform settings.

Step 3: Set the master's communications station number and communications speed

☑ When setting the master's station number (parameter 09-46, default is set as 100), make sure not to use the same number as a slave station.

☑ Set the CANopen communications speed (parameter 09-37); regardless of whether the driver is defined as a master or slave station, the communications speed is set via this parameter.

Step 4: Write program code

Real-time access: Can directly read/write to or from the corresponding D area.

Non real-time access:

Read command: Use the CANRX command for reading. M1066 will be 1 when reading is complete; M1067 will be 1 if reading is successful, and M1067 will be 0 if an error has occurred.

Write command: Use the CANTX command for writing. M1066 will be 1 when writing is complete; M1067 will be 1 if writing is successful, and M1067 will be 0 if an error has occurred.

Refresh command: Use CANFLS command to refresh (if there are RW attributes, the master will write to the slave station; if there are RO attributes, the slave station will return the read values to the master); M1066 will be 1 if refresh has been completed; M1067 will be 1 if refresh is successful, and M1067 will be 0 if an error has occurred.

NOTE

When using CANRX, CANTX or CANFLS, internal implementation commands will wait until M1066 is completed before executing the next CANRX, CANTX or CANFLS.

Afterwards, download program to the driver (Please note that the PLC's default communications format is ASCII 7N2 9600, and the station number is 2. The WPL must therefore be modified, and the WPL setting pathway is **settings > communications settings**)

Step 5: Set the slave stations' station numbers, communications speed, control source, and command source

Delta's C2000 and EC series devices currently support the CANopen communications interface driver, and the corresponding slave station numbers and communications speed parameters are as follows:

	Corresponding device parameters		Value	Definition
	C2000	E-C		
Slave station address	09-36	09-20	0	Disable CANopen hardware interface
			1~127	CANopen Communication address
Communication speed	09-37	09-21	0	1M
			1	500K
			2	250K
			3	125K
			4	100K
			5	50K
Control source	00-21	-	3	
	-	02-01	5	
Frequency source	00-20	-	6	
	-	02-00	5	
Torque source	11-33	-	3	
	-	-	-	
Position source	11-40	-	3	
	-	-	-	

Delta's A2 Servo currently supports the CANopen communications interface, and the corresponding slave station numbers and communications speed parameters are as follows:

	Corresponding device parameters	Value	Definition
	A2		
Slave station address	03-00	1~127	CANopen Communication address
Communication speed	03-01 bit 8-11 XRXX	R= 0	125K
		R= 1	250K
		R= 2	500K

		R= 3	750K
		R= 4	1M
Control/command source	01-01	B	

Step 6: Connect hardware wiring

When performing wiring, note the head and tail terminal resistance; connection methods are as follows:

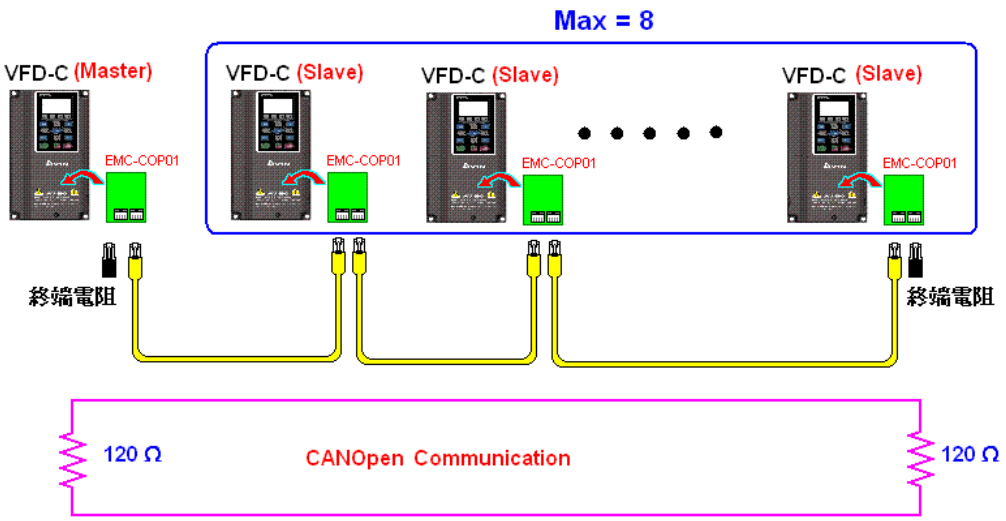

Step 7: Initiate control

After a program has been written and downloaded, switch the PLC mode to Run. Merely turn power to master and slave stations off and then on again.

Refer to CANMasterTest 1 vs. 2 driver.dvp

Example

C2000 driver one-to-two control

Step 1: Activating CANopen Master functions

- ☑ Parameter 09-45=1 (initiates Master functions); restart power after completing setting, the status bar on the KPC-CC01 digital keypad will display "CAN Master".
- ☑ Parameter 00-02=6 reset PLC (please note that this action will reset the program and PLC registers to the default values)
- ☑ Turn power off and on again.
- ☑ **Use the KPC-CC01 digital keypad to set the PLC control mode as "PLC Stop"** (if the KPC-CE01 digital keypad is used, set as "PLC 2"; if a newly-introduced driver is used, the blank internal PLC program will cause a PLFF warning code to be issued).

Step 2: Master memory correspondences

- ☑ Enable WPL
- ☑ Use keypad set PLC mode as Stop (PLC 2)
- ☑ WPL read D1070 to D1099 D2000 to D2799
- ☑ Set D2000=10 D2100=11

- ☑ Set D2100 2200 2300 2400 2500 2600 2700=0
- ☑ Download D2000 to D2799 settings

Step 3: Set the master's communications station number and communications speed

- ☑ When setting the master's station number (parameter 09-46, default is set as 100), make sure not to use the same number as a slave station.
- ☑ Set the CANopen communications speed as 1M (parameter 09-37=0); regardless of whether the driver is defined as a master or slave station, the communications speed is set via this parameter.

Step 4: Write program code

Real-time access: Can directly read/write to or from the corresponding D area.

Non real-time access:

Read command: Use the CANRX command for reading. M1066 will be 1 when reading is complete; M1067 will be 1 if reading is successful, and M1067 will be 0 if an error has occurred.

Write command: Use the CANTX command for writing. M1066 will be 1 when writing is complete; M1067 will be 1 if writing is successful, and M1067 will be 0 if an error has occurred.

Refresh command: Use CANFLS command to refresh (if there are RW attributes, the master will write to the slave station; if there are RO attributes, the slave station will return the read values to the master); M1066 will be 1 if refresh has been completed; M1067 will be 1 if refresh is successful, and M1067 will be 0 if an error has occurred.

NOTE

When using CANRX, CANTX or CANFLS, internal implementation commands will wait until M1066 is completed before executing the next CANRX, CANTX or CANFLS.

Afterwards, download program to the driver (Please note that the PLC's default communications format is ASCII 7N2 9600, and the station number is 2. The WPL must therefore be modified, and the WPL setting pathway is **settings > communications settings**)

Step 5: Set the slave stations' station numbers and communications speed

Slave station no. 1: 09-37 = 0(Speed 1M) 09-36=10(Node ID 10)

Slave station no. 2: 09-37 = 0(Speed 1M) 09-36=10(Node ID 11)

Step 6: Connect hardware wiring

When performing wiring, note the head and tail terminal resistance; connection methods are as follows:

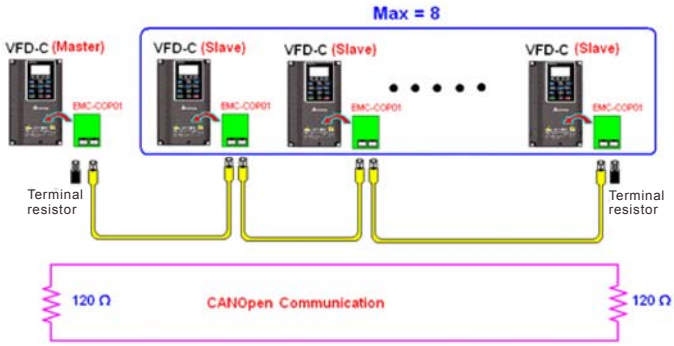

Step 7: Initiate control

After a program has been written and downloaded, switch the PLC mode to Run. Merely turn power to master and slave stations off and then on again.

Refer to CANMasterTest 1 vs. 2 driver.dvp

16-9 Explanation of various PLC mode controls (speed, torque, homing, and position)

The torque mode and position mode are based on FOC vector control and speed mode also supports FOC vector control. Control therefore cannot be performed successfully unless you study motor parameters ahead of time for the torque mode and position mode, and the speed mode based on FOC.

In addition, motors are classified as two types: IM and PM. You therefore need to study IM motor parameters. For PM motors, after completing motor parameter study, you must also complete study of motor origin angle of deviation. Please refer to parameters 12-58 Pr. 05-00 detailed explanation.

※ If a PM motor belongs to Delta's ECMA series, motor parameters can be directly input from data in the servo motor catalog, and parameter study will not be needed.

Control methods and settings are explained as follows:

Speed control:

Register table for speed mode:

Control special M

Special M	Description of Function	Attributes
M1025	Driver frequency = set frequency (ON)/driver frequency =0 (OFF)	RW
M1026	Driver operating direction FWD(OFF)/REV(ON)	RW
M1040	Hardware power (Servo On)	RW
M1042	Quick stop	RW
M1044	Pause (Halt)	RW
M1052	Lock frequency (lock, frequency locked at the current operating frequency)	RW

Status special M

Special M	Description of Function	Attributes
M1015	Frequency attained (when used together with M1025)	RO
M1056	Servo On Ready	RO
M1058	On Quick Stopping	RO

Control special D

Special D	Description of Function	Attributes
D1060	Mode setting (speed mode is 0)	RW

Status special D

Special D	Description of Function	Attributes
D1037	Converter output frequency (0.00~600.00)	RO
D1050	Actual operating mode (speed mode is 0)	RO

Speed mode control commands:

FREQ(P)	S1	S2	S3
Target speed		The first acceleration time setting	The first deceleration time setting

Example of speed mode control:

Before performing speed control, if the FOC (magnetic field orientation) control method is used, setting of electromechanical parameters must first be completed.

1. Setting D1060 = 0 will shift the converter to the speed mode (default).
2. Use the FREQ command to control frequency, acceleration time, and deceleration time.
3. Set M1040 = 1, the driver will now be excited, but the frequency will be 0.
4. Set M1025 = 1, the driver frequency command will now jump to the frequency designated by FREQ, and acceleration/deceleration will be controlled on the basis of the acceleration time and deceleration time specified by FREQ.
5. M1052 can be used to lock the current operating frequency.
6. M1044 can be used to temporarily pause operation, and the deceleration method will comply with deceleration settings.
7. M1042 can be used to perform quick stop, and deceleration will be as quick as possible without giving rise to an error. (There may still be a jump error if the load is too large.)
8. Control user rights: M1040(Servo ON) > M1042(Quick Stop) >M1044(Halt) >M1052(LOCK)

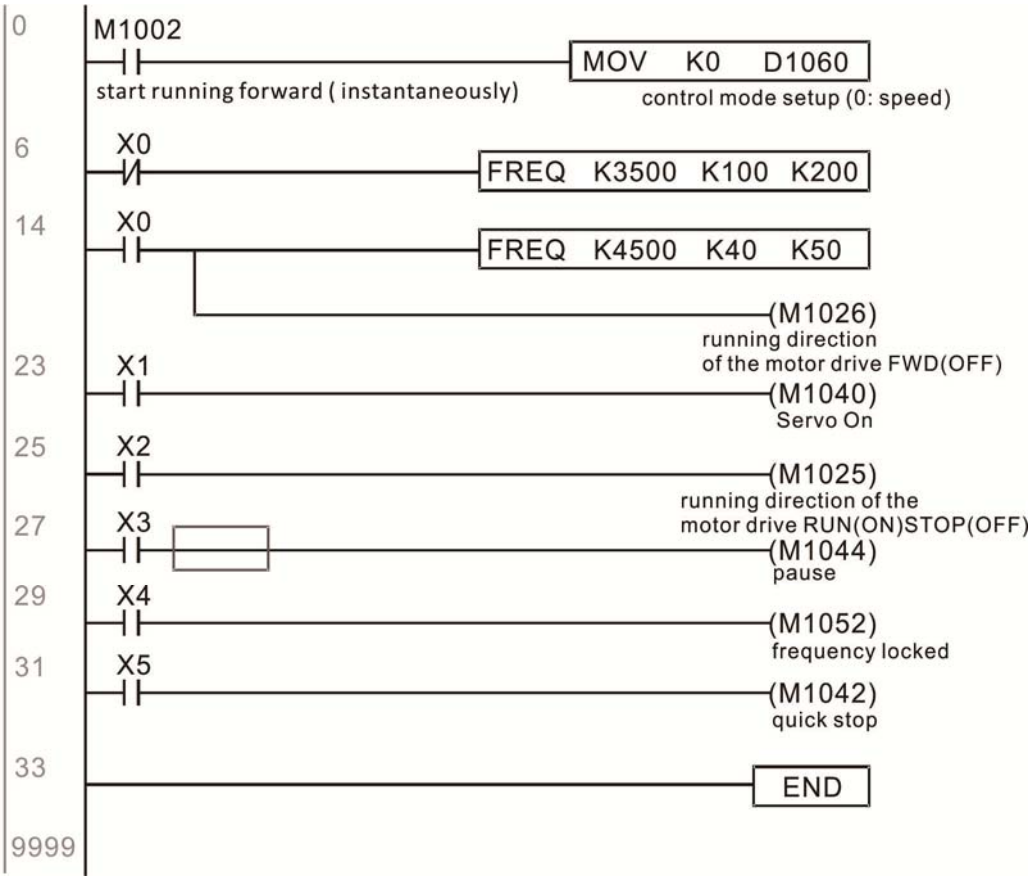

Torque control:

Register table for torque mode:

Control special M

Special M	Description of Function	Attributes
M1040	Servo On	RW

Status special M

Special M	Description of Function	Attributes
M1056	Servo On Ready	RO
M1063	Torque attained	RO

Control special D

Special D	Description of Function	Attributes
D1060	Operating mode setting (torque mode is 2)	RW

Status special D

Special D	Description of Function	Attributes
D1050	Actual operating mode (speed mode is 0)	RO
D1053	Actual torque	RO

Torque mode control commands:

TORQ(P) S1 S2

Target torque (with numbers) Frequency restrictions

Example of torque mode control:

The setting of electromechanical parameters involved in torque control must be completed before implementing torque control.

1. Set D1060 = 2 to change the converted to the torque mode.
2. Use the TORQ command to implement torque control and speed limits.
3. Set M1040 = 1; the driver will now be excited, and immediately jump to the target torque or speed limit. D1053 can be used to find out the current torque.

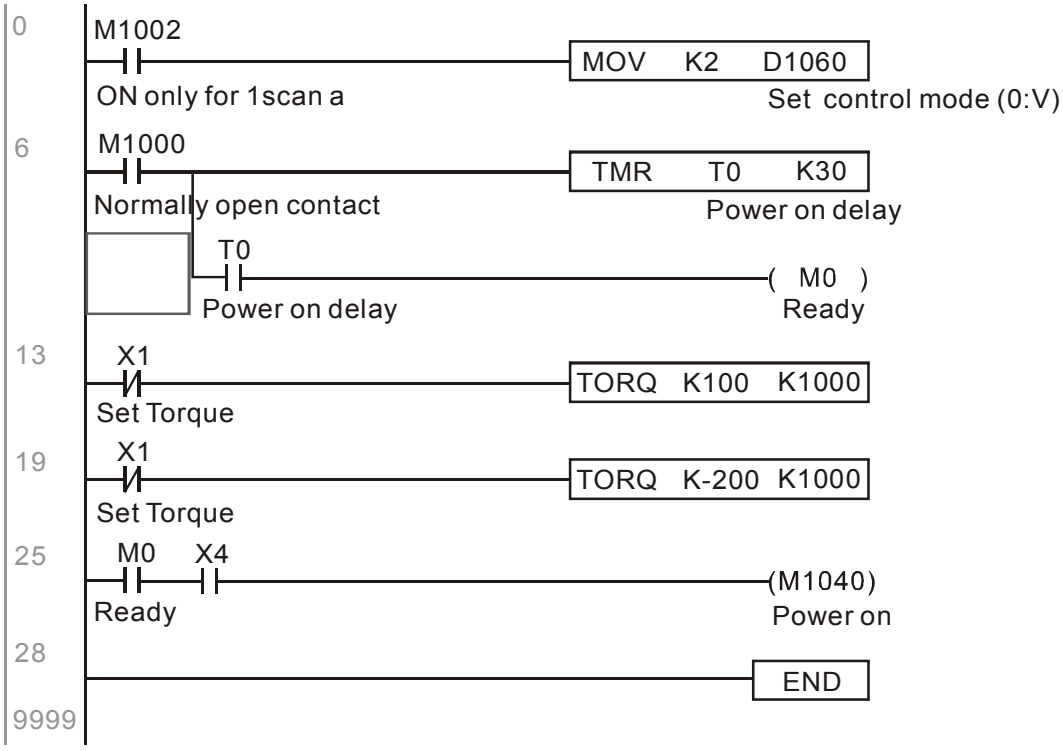

Homing control/position control:

Register table in homing mode/position mode:

Control special M

Special M	Description of Function	Attributes
M1040	Servo On	RW
M1048	Move to new position, must use control mode as position mode (D1060 = 1) and M1040 = 1	RW
M1050	Absolute position/relative position (0: relative/1: absolute)	RW
M1055	Search for origin (home start), must use control mode as position mode (D1060 = 3) and M1040 = 1	RW

Status special M

Special M	Description of Function	Attributes
M1064	Target reached	RO
M1070	Return home complete	RO
M1071	Homing error	RO

Control special D

Special D	Description of Function	Attributes
D1060	Operating mode setting (position mode is 1, homing mode is 3)	RW

Status special D

Special D	Description of Function	Attributes
D1050	Actual operating mode (speed mode is 0)	RO
D1051	Actual position (Low word)	RO
D1052	Actual position (High word)	RO

※ D1051 and D1052 must be combined to give the actual location, and it has a serial number.

Position mode control commands:

DPOS(P) S1
Target (with numbers)

Example of homing mode/position mode control:

First complete setting of electromechanical parameters connected with position before implementing homing control or position control.

1. Set 00-40 to select the homing method and the corresponding limit sensors and origin. (Setting the MI function gives a reverse rotation limit of 44, a forward rotation limit of 45, and an origin proximity of 46. Because the C2000 current only supports a Z-phase origin, the encoder card must a provide Z-phase.)

2. Set D1060 = 3 to change the converter to the homing mode.

3. Set M1040 = 1
   In the VF/SVC/VFPG mode, will enter the STANDBY mode (01-34 can be used to access the STANDBY mode's action options).
   In the FOC+PG mode, zero speed holding will occur

4. Set M1055 = 1, and the driver will now start to search for the origin.

5. When homing is complete, M1070 will change to ON. If you now set D1060 = 1, the control mode will switch to position mode (please note that M1040 will not change to off; this mechanical origin move).

6. The DPOS command can now be used to designate the driver's target location. M1050 or parameter 00-12 can be used to set a change in absolute or relative position.

7. Implement M1048 Pulse ON once (must be more than 1 ms in duration), and the converter will begin to move toward the target (M1040 must be 1 to be effective). The current position can be obtained from D1051 and D1052.

Part 1: The initialization mode is defined as the "homing" mode from the beginning (set D1060 = 3). X2 is used to implement converter excitation.

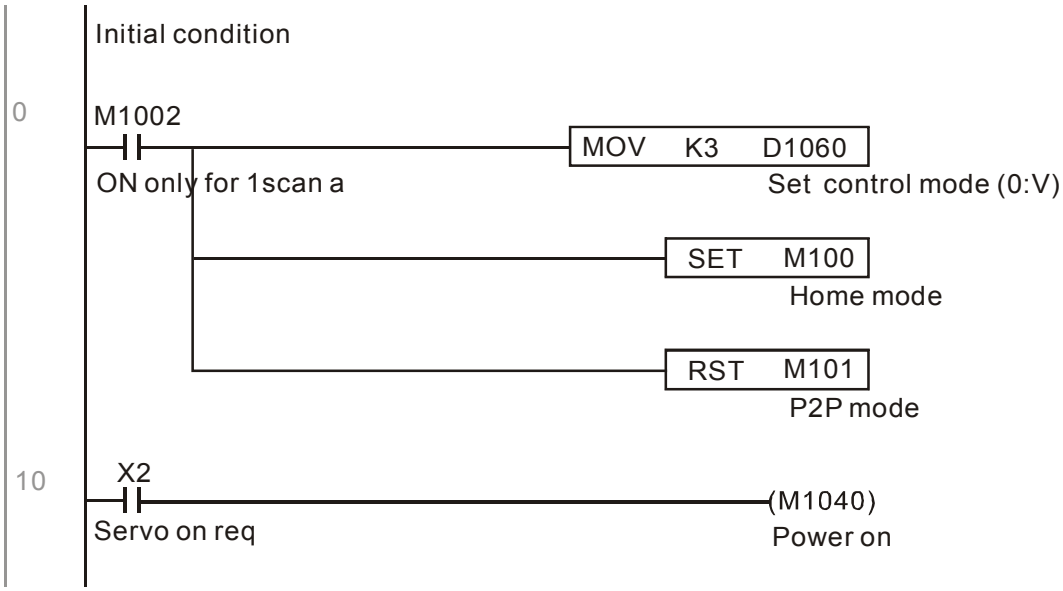

Part 2—homing: Use X3 to trigger homing action; will automatically switch to position mode after completion.

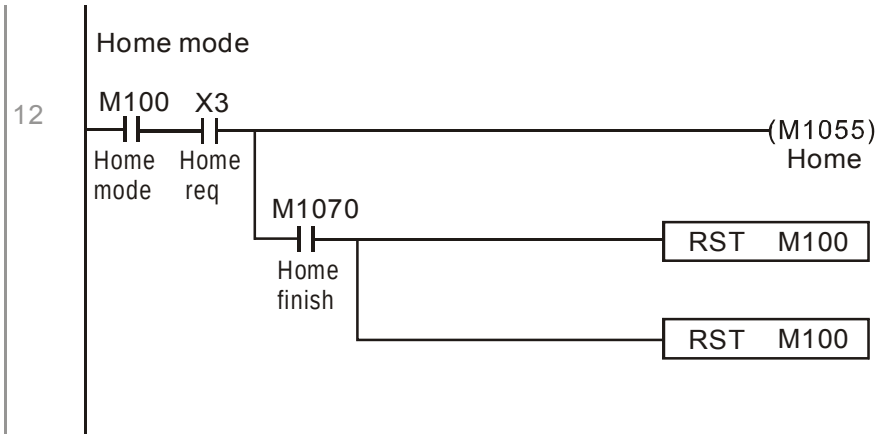

Part 3—point-to-point movement: Switch to position mode (set D1060 = 1), and move back and forth between position points. (+300000 ~ -300000)

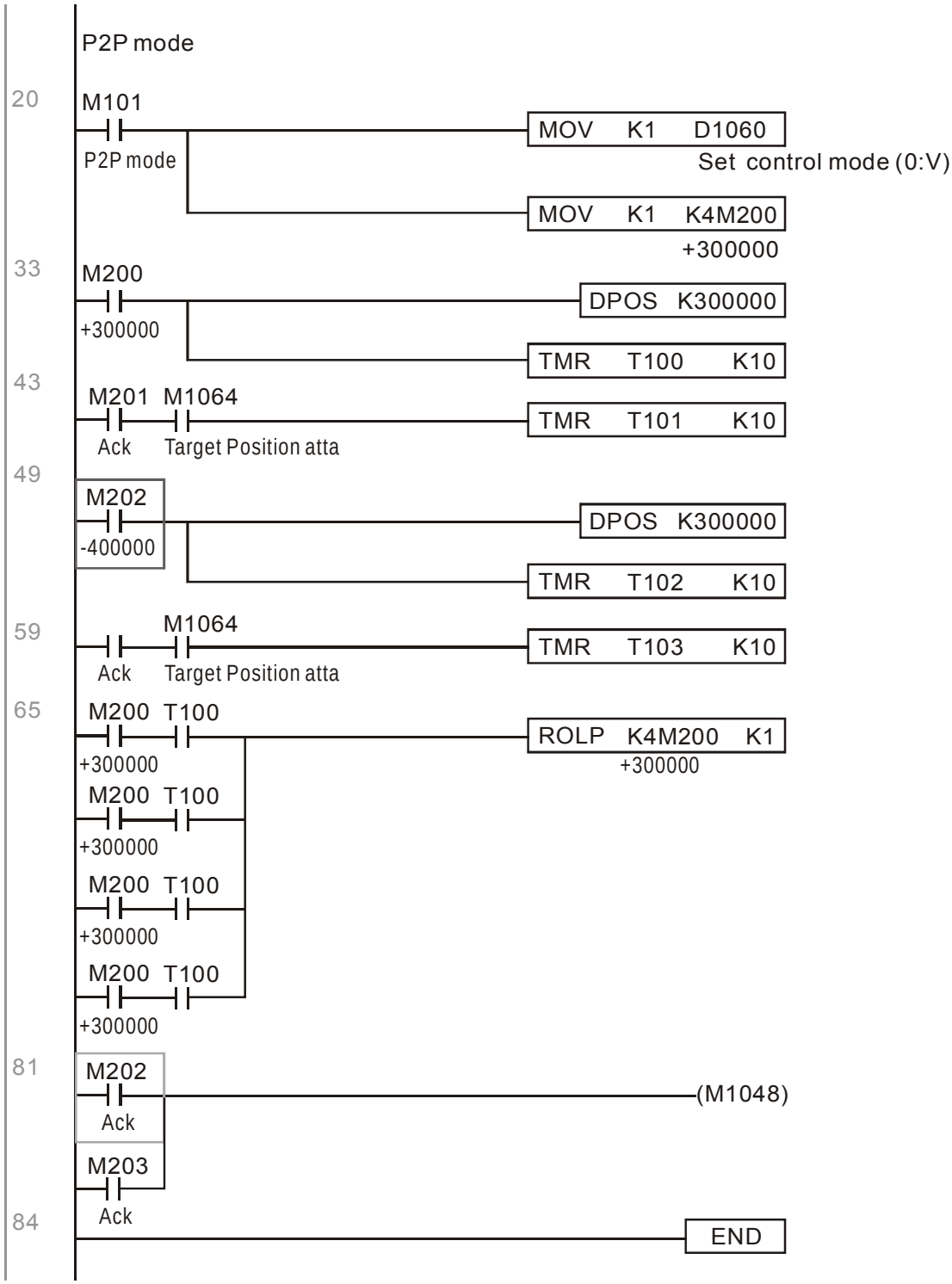

※ If homing is not needed in an application, the first and second parts can be skipped. However, the M1040 condition from Part 1 must be included, and the writing method in Part 1 involve the use of X2 to achieve direct access. In addition, when M101 is used at the beginning of Part 3 to set the control mode, it can be rewritten as M1002, which will put the PLC immediately into the position mode when it starts running.

16-10 Internal communications main node control

The protocol has been developed in order to facilitate the use of 485 instead of CANopen in certain application situations. The 485 protocol offers similar real-time characteristics as CANopen; this protocol can only be used on the C2000 and CT2000 devices. The maximum number of slave devices is 8.

Internal communications have a master-slave structure. The initiation method is very simple:

Slave device:
Set parameter 09-31 = -1 to -8 in order to access 8 nodes, and set parameter 00-20 = 1 to define the control source as 485 and access the reference sources that must be controlled, namely speed command (00-21 = 2), torque command (11-33 = 1), and position command (11-40=2). This will complete slave device settings. (PLC functions do not need to be activated)

System
Setting the master is even simpler; it is only necessary to set parameter 09-31 = -10, and enable the PLC.

Hardware wiring: The master and slave stations are connected via the 485 serial port. The C2000 provide two types of 485 serial port interfaces, see the figure below: (please refer to 06 Control terminals concerning detailed terminal connections)

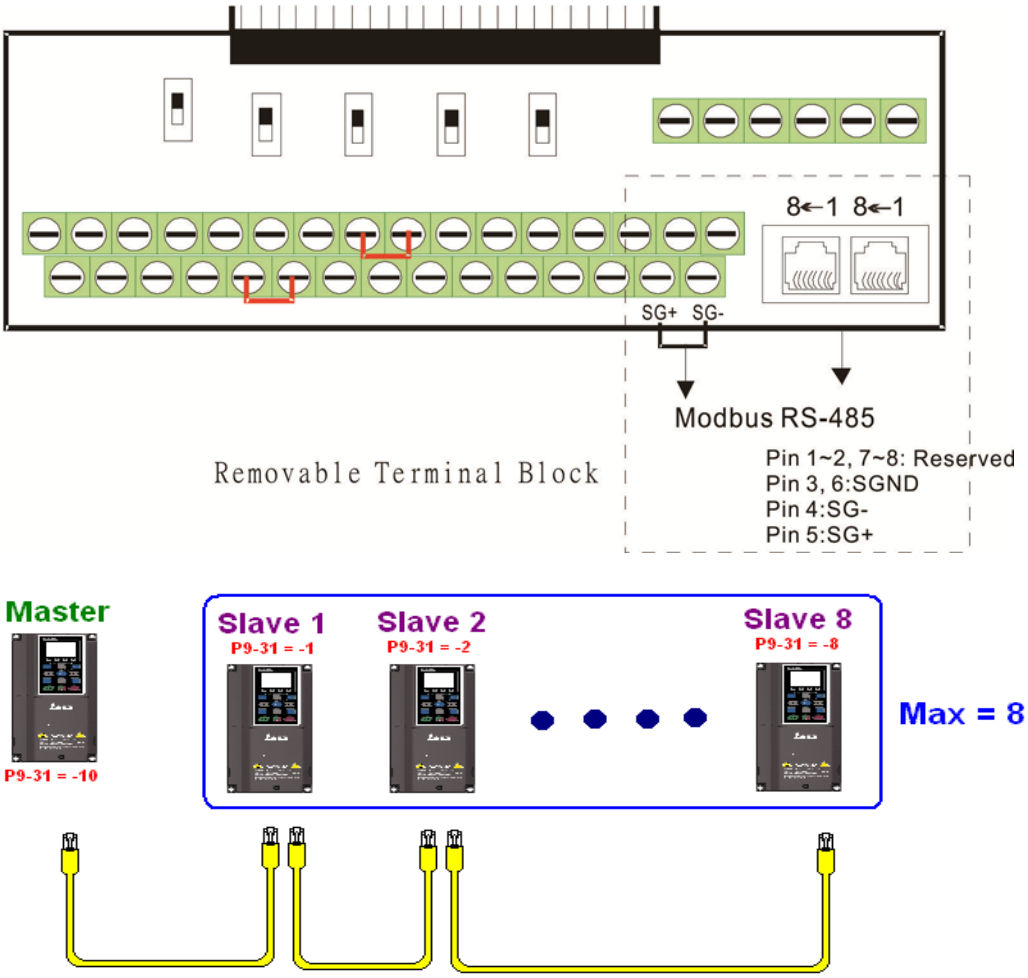

Master programming: In a program, D1110 can be used to define a slave station to be controlled (1-8, if set as 0, can jump between 8 stations). Afterwards, M1035 is set as 1, and the memory positions of the master and slave stations will correspond. At this time, it is only necessary to send commands to the correlation slave station address to control that station. The following is a register table connected with internal communications:

Control special M

Special M	Description of Function	Attributes
M1035	Initiates internal communications control	RW

Control special D

Special D	Description of Function	Attributes
D1110	Internal node communications number 1-8 (set the station number of the slave station to be controlled)	RW

Special D	Description of Function							Attributes
	Definition	bit	User rights	Speed mode	Location mode	Torque mode	Homing mode	
D1120 + 10*N	Internal node N control command	0	4	Command functions	-	-	Homing Origin	RW
		1	4	Reverse rotation requirements	Immediate change	-	-	
		2	4	-	-	-	-	
		3	3	Temporary pause	Temporary pause	-	-	
		4	4	Frequency locking	-	-	Temporary pause	
		5	4	JOG	-	-	-	
		6	2	Quick Stop	Quick Stop	Quick Stop	Quick Stop	
		7	1	Servo ON	Servo ON	Servo ON	Servo ON	
		11~8	4	Speed interval switching	Speed interval switching	-	-	
		13~12	4	Deceleration time change	-	-	-	
		14	4	Enable Bit 13 ~ 8	Enable Bit 13 ~ 8	-	-	
		15	4	Clear error code	Clear error code	Clear error code	Clear error code	
D1121 + 10*N	Internal node N control mode			0	1	2	3	RW
D1122 + 10*N	Internal node N reference command L			Speed command (no number)	Position command (with numbers)	Torque command (with numbers)	-	RW
D1123 + 10*N	Internal node N reference command H			-		Speed limit	-	RW

※ N = 0 ~ 7

Status special D

Special D	Description of Function	Attributes
D1115	Internal node synchronizing cycle (ms)	RO
D1116	Internal node error (bit0 = slave device 1, bit1 = slave device 2,…bit7 = slave device 8)	RO
D1117	Internal node online correspondence (bit0 = slave device 1, bit1 = slave device 2,…bit7 = slave device 8)	RO

Special D	Description of Function					Attributes
	bit	Speed mode	Location mode	Torque mode	Homing mode	
D1126 + 10*N	0	Frequency command arrival	Position command attained	Torque command attained	Zero command completed	RO
	1	Clockwise	Clockwise	Clockwise	Clockwise	
		Counterclockwise:	Counterclockwise:	Counterclockwise:	Counterclockwise:	
	2	Warning	Warning	Warning	Warning	
	3	Error	Error	Error	Error	
	5	JOG				
	6	Quick Stop	Quick Stop	Quick Stop	Quick Stop	
	7	Servo ON	Servo ON	Servo ON	Servo ON	
D1127 + 10*N		Actual frequency	Actual position (with numbers)	Actual torque (with numbers)	-	RO
D1128 + 10*N		-		-	-	

※ N = 0 ~ 7

Example: Assume it is desired to control slave station 1 operation at frequencies of 30.00Hz and 60.00 Hz, status, and online node correspondences:

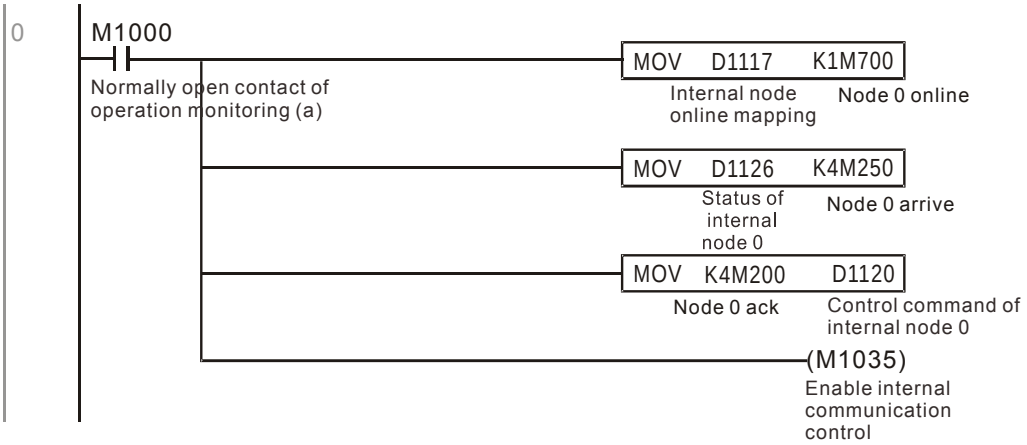

When it is judged that slave station 1 is online, delay 3 sec. and begin control

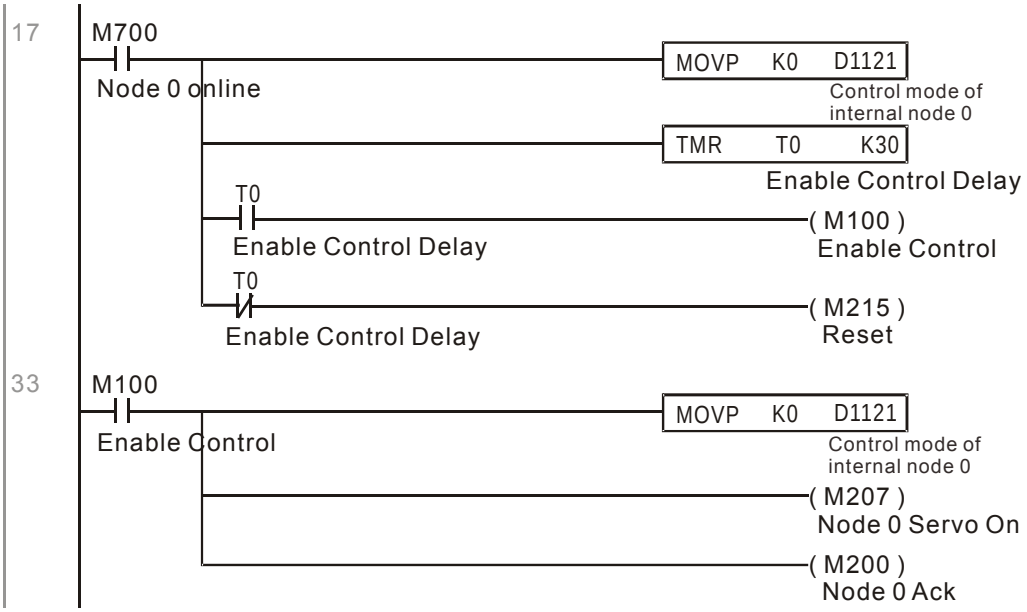

It is required slave station 1 maintain forward rotation at 30.00Hz for 1 sec., and maintain reverse rotation at 60.00 Hz for 1 sec., and repeat this cycle continuously.

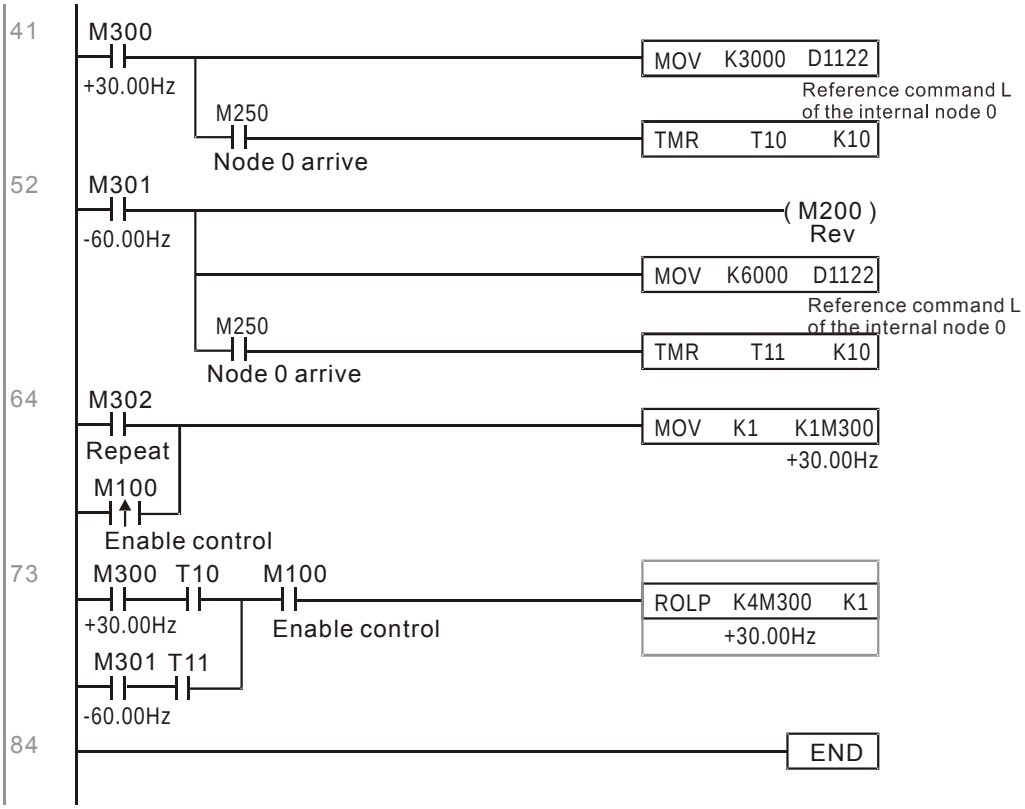

16-11 Count function using MI8

16-11-1 High-speed count function

The C2000's MI8 supports one-way pulse counting, and the maximum speed is 100K. The starting method is very simple, and only requires setting M1038 to begin counting. The 32 bit count value is stored on D1054 and D1055 in non-numerical form. M1039 can reset the count value to 0.

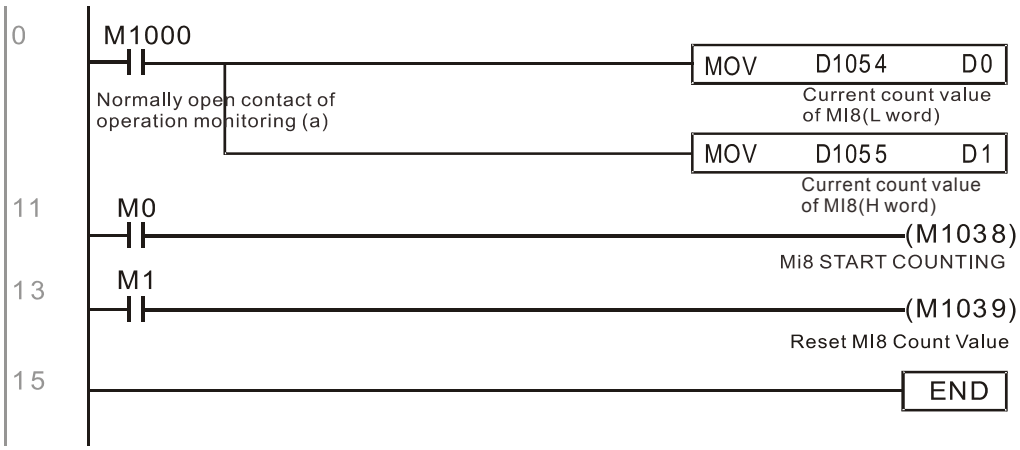

※ When the PLC program defines MI8 for use as a high-speed counter, and also for use in PLC procedures, it must be written to M1038 or M1039, and the original MI8 functions will be disabled.

16-11-2 Frequency calculation function

Apart from high-speed counting, the C2000's MI8 can also convert a received pulse to frequency. The following figure shows that there is no conflict between frequency conversion and count calculations, which can be performed simultaneously.

PLC speed calculation formula

D1057 Speed

D1058 Interval between calculations

D1059 Decimal places

Assuming that there are 5 input pulses each second, (see figure below) we set D1058=1000ms=1.0 sec. as the calculation interval. This enables five pulses to be sent to the converter each second.

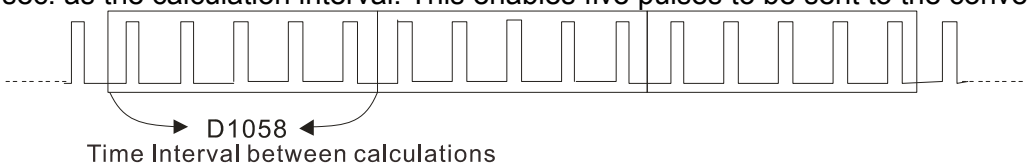

Assuming that each 5 pulses correspond to 1Hz, we set D1057=5.

Assuming that we wish to display numbers to two decimal places, we set D1059=2, which is also 1.00Hz. The numerical value displayed at D1056 is 100. For simplicity, the D1059 conversion formula can be expressed as in the following table:

$$D1058 = \frac{\text{Pulses per second}}{D1057} \times \frac{1000}{D1057} \times 10^{D1059}$$

16-12 Modbus Remote IO Control Applications (use MODRW)

The C2000's internal PLC supports 485 read/write functions, which can be realized using the MODRW command. However, the 485 serial port must be defined as available for the PLC's 485 use before writing a program, and the parameter 09-31 must be set as -12. After completing settings, the standard functions defined by 485 can be used to implement read/write commands at other stations. Communications speed is defined by parameter 09-01, the communications format is defined by parameter 09-04, and the PLC's current station number is defined by parameter 09-35. The C2000 currently supports the functions

read coil (0x01), read input (0x02), read register (0x03), write to single register (0x06), write to several coils (0x0F), and write to several registers (0x10). Explanations and the usage of these functions are provided as follows:

MODRW command					General meaning	Slave device is Delta's PLC meaning	Slave device is Delta's converter meaning
S1	S2	S3	S4	S5			
Node ID	Command	Address	Return: D area	Length:			
K3	H01	H500	D0	K18	Read coil (Bit)	Read 18 bits of data corresponding to slave station 3 PLC Y0 to Y21. This data is stored by bit 0 to 15 of the this station's D0 and bit 0 to bit 3 of D1.	Does not support this function
K3	H02	H400	D10	K10	Read input (Bit)	Read 10 bits of data corresponding to slave station 3 PLC X0 to X11. This data is stored by bit 0 to 9 of this station's D10.	Does not support this function
K3	H03	H600	D20	K3	Read register (word)	Read 3 words of data corresponding to slave station 3 PLC T0 to T2. This data is stored by D20 to D22.	Read 3 words of data corresponding to slave station 3 converter parameters 06-00 to 06-02. This data is stored by D20 to D22
K3	H06	H610	D30	XX	Write to single register (word)	Write slave station 3 PLC's T16 to this station's D30 value	Write slave station 3 converter 06 to 16 parameter to this station's D30 value
K3	H0F	H509	D40	K10	Write to multiple coils (Bit)	Write slave station 3 PLC's Y11 to Y22 to bit 0 to 9 of D40.	Does not support this function
K3	H10	H602	D50	K4	Write to multiple registers (word)	Write slave station 3 PLC's T2 to T5 to D50 to D53	Write slave station 3 converter 06-02 to 06-05 parameters to this station's D50 to D53

※ XX indicates doesn't matter

After implementing MODRW, the status will be displayed in M1077 (485 read/write complete), M1078 (485 read/write error), and M1079 (485 read/write time out). M1077 is defined so as to immediately revert to 0 after the MODRW command has been implemented. However, any of three situations—a report of no error, a data error report, or time out with no report—will cause the status of M1077 to change to On.

Example program: Testing of various functions

At the start, will cause the transmitted time sequence to switch to the first data unit.

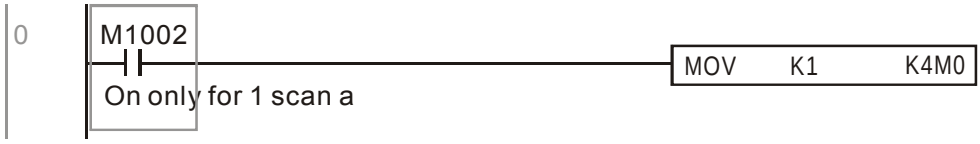

When the reported message indicates no error, it will switch to the next transmitted command

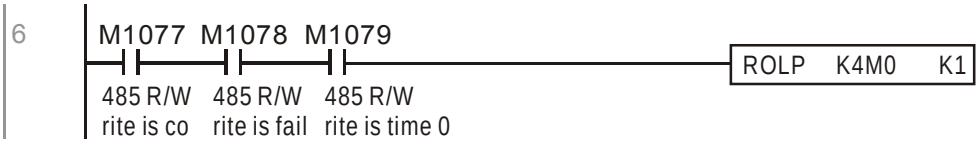

If time out occurs or an error is reported, the M1077 will change to On. At this time, after a delay of 30 scanning cycles, it will re-issue the original command once

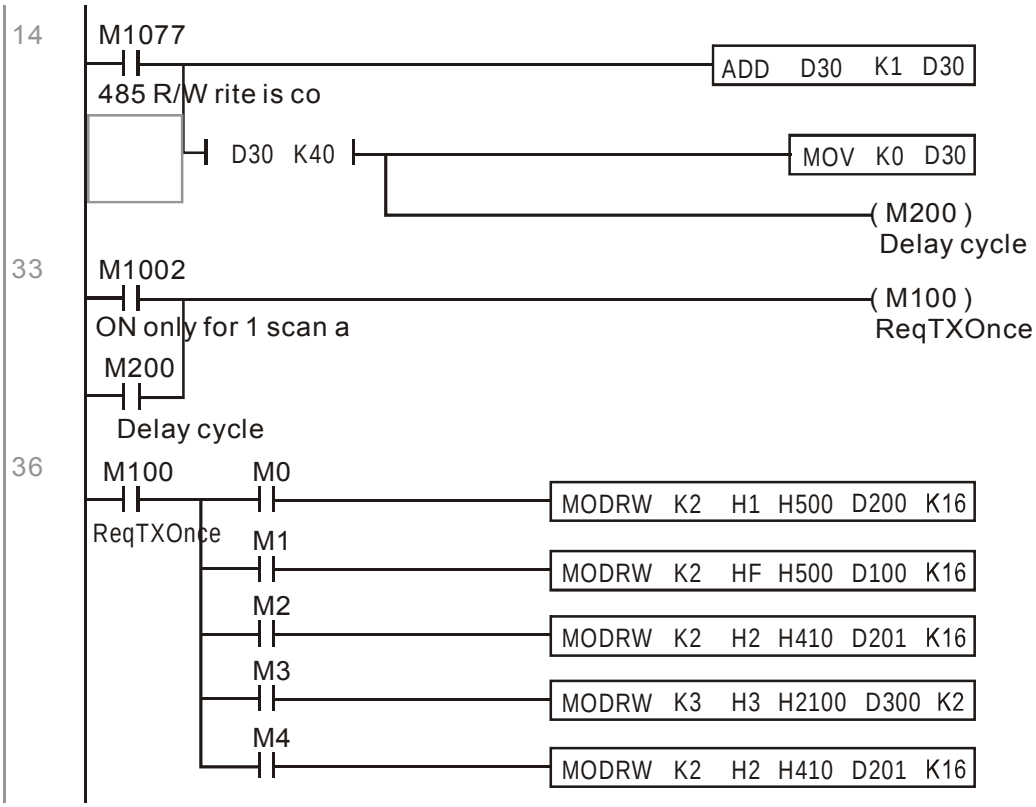

It will repeat after sending all commands

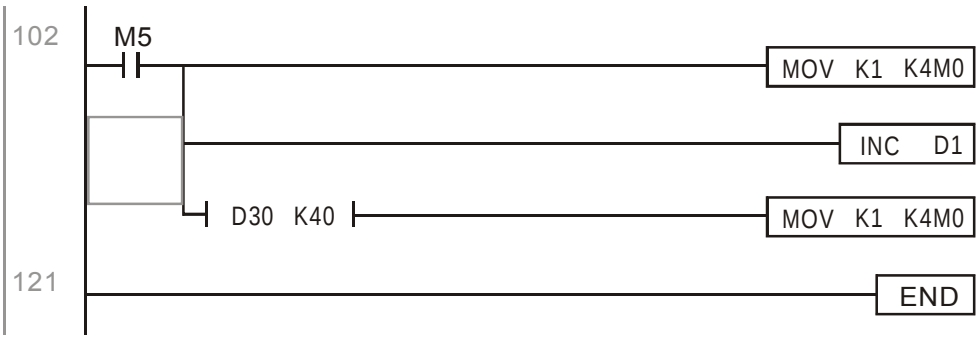

Practical applications:

Actual use to control the RTU-485 module.

Step 1: Set the communications format. Assume that the communications format is 115200, 8,N,2, RTU

C2000：The default PLC station number is set as 2 (09-35)

09-31=-12(COM1 is controlled by the PLC), 09-01=115.2(The communications speed is 115200)

09-04=13(The format is 8,N,2, RTU)

RTU485: The station number = 8 (give example)

ID7	ID6	ID5	ID4	ID3	ID2	ID1	ID0
0	0	0	0	1	0	0	0

PA3	PA2	PA1	PA0	DR2	DR1	DR0	A/R
1	0	0	0	1	1	1	0

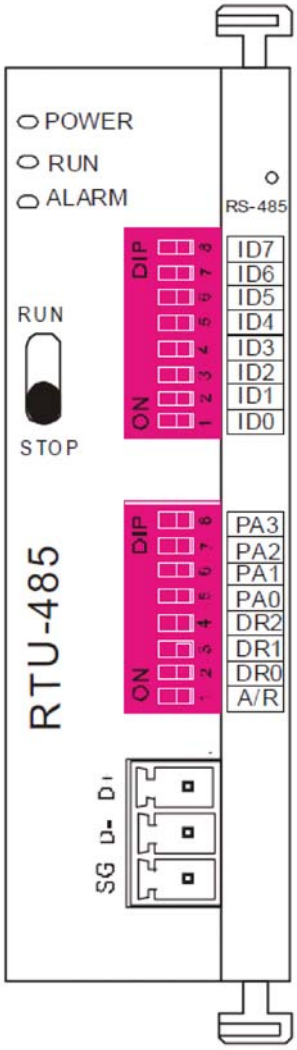

Communication station #:
ID0~ ID7 are defined as 2^0, 2^1, 2^2…2^6, 2^7

Communication protocol

PA3	PA2	PA1	PA0	A/R	Communication Protocol
OFF	OFF	OFF	OFF	ON	7,E,1 · ASCII
OFF	OFF	OFF	ON	ON	7,O,1 · ASCII
OFF	OFF	ON	OFF	ON	7,E,2 · ASCII
OFF	OFF	ON	ON	ON	7,O,2 · ASCII
OFF	ON	OFF	OFF	ON	7,N,2 · ASCII
OFF	ON	OFF	ON	ON	8,E,1 · ASCII
OFF	ON	ON	OFF	ON	8,O,1 · ASCII
OFF	ON	ON	ON	ON	8,N,1 · ASCII
ON	OFF	OFF	OFF	ON	8,N,2 · ASCII
OFF	ON	OFF	ON	OFF	8,E,1 · RTU
OFF	ON	ON	OFF	OFF	8,O,1 · RTU
OFF	ON	ON	ON	OFF	8,N,1 · RTU
ON	OFF	OFF	OFF	OFF	8,N,2 · RTU

DR2	DR1	DR0	Communicaton Speed
OFF	OFF	OFF	1,200 bps
OFF	OFF	ON	2,400 bps
OFF	ON	OFF	4,800 bps
OFF	ON	ON	9,600 bps
ON	OFF	OFF	19,200 bps
ON	OFF	ON	38,400 bps
ON	ON	OFF	57,600 bps
ON	ON	ON	115,200 bps

Step 2: Install control equipment. We sequentially connect a DVP16-SP (8 IN 8 OUT), DVP-04AD (4 channels AD), DVP02DA (2 channels DA), and DVP-08ST (8 switches) to the RTU485.

The following corresponding locations can be obtained from the RTU485's configuration definitions:

Module	Terminals	485 Address
DVP16-SP	X0 ~ X7	0400H ~ 0407H
	Y0 ~ Y7	0500H ~ 0507H
DVP-04AD	AD0 ~ AD3	1600H ~ 1603H
DVP02DA	DA0 ~ DA1	1640H ~ 1641H
DVP-08ST	Switch 0 ~ 7	0408H ~ 040FH

Step 3: Physical configuration

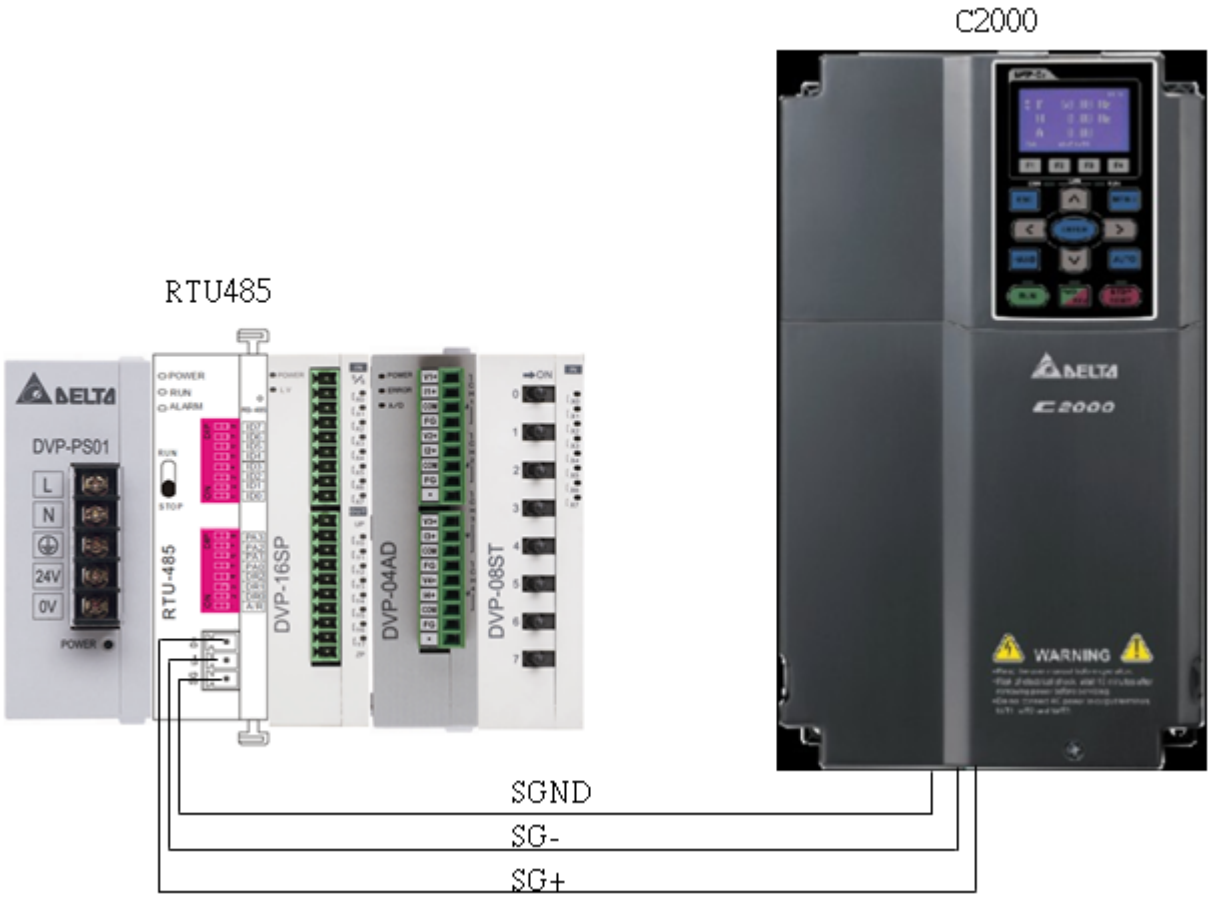

Step 4: Write to PLC program

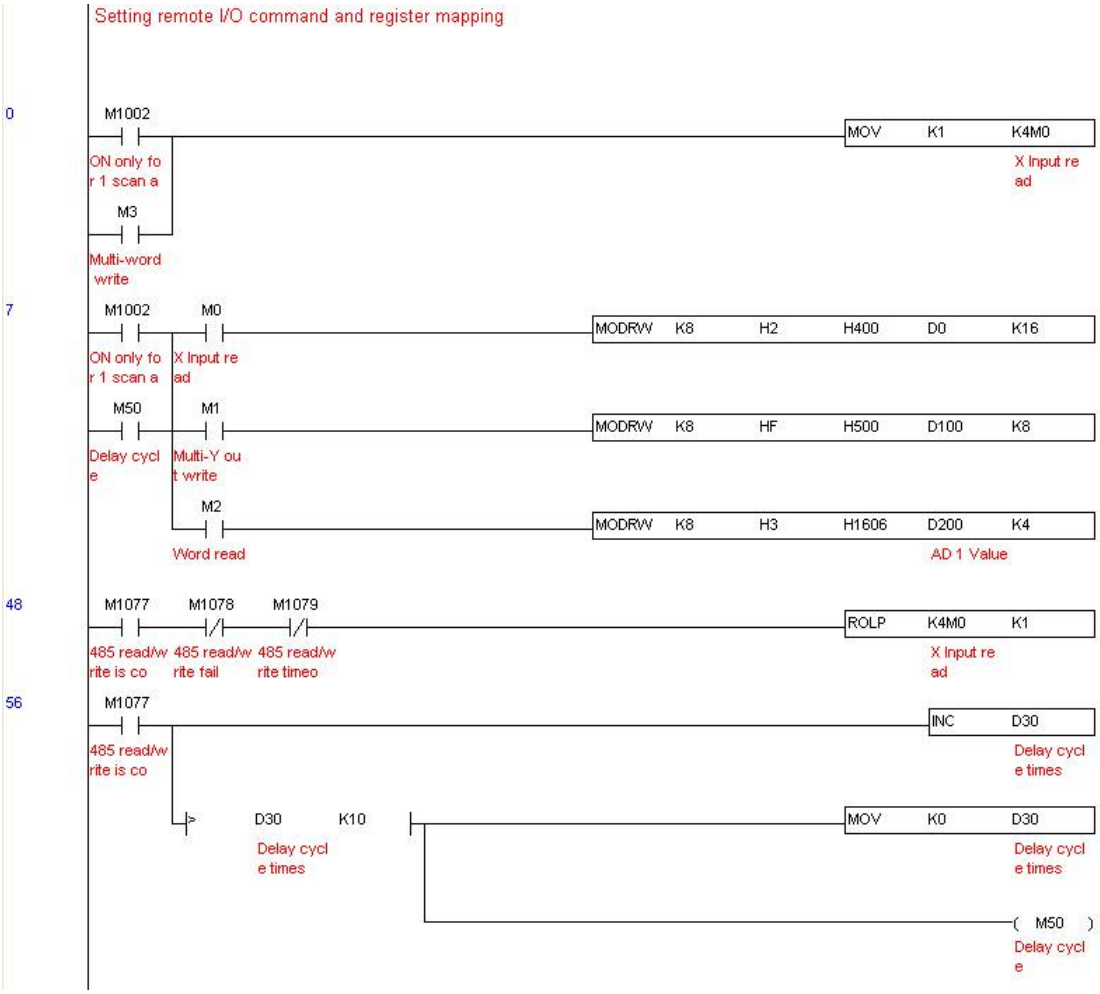

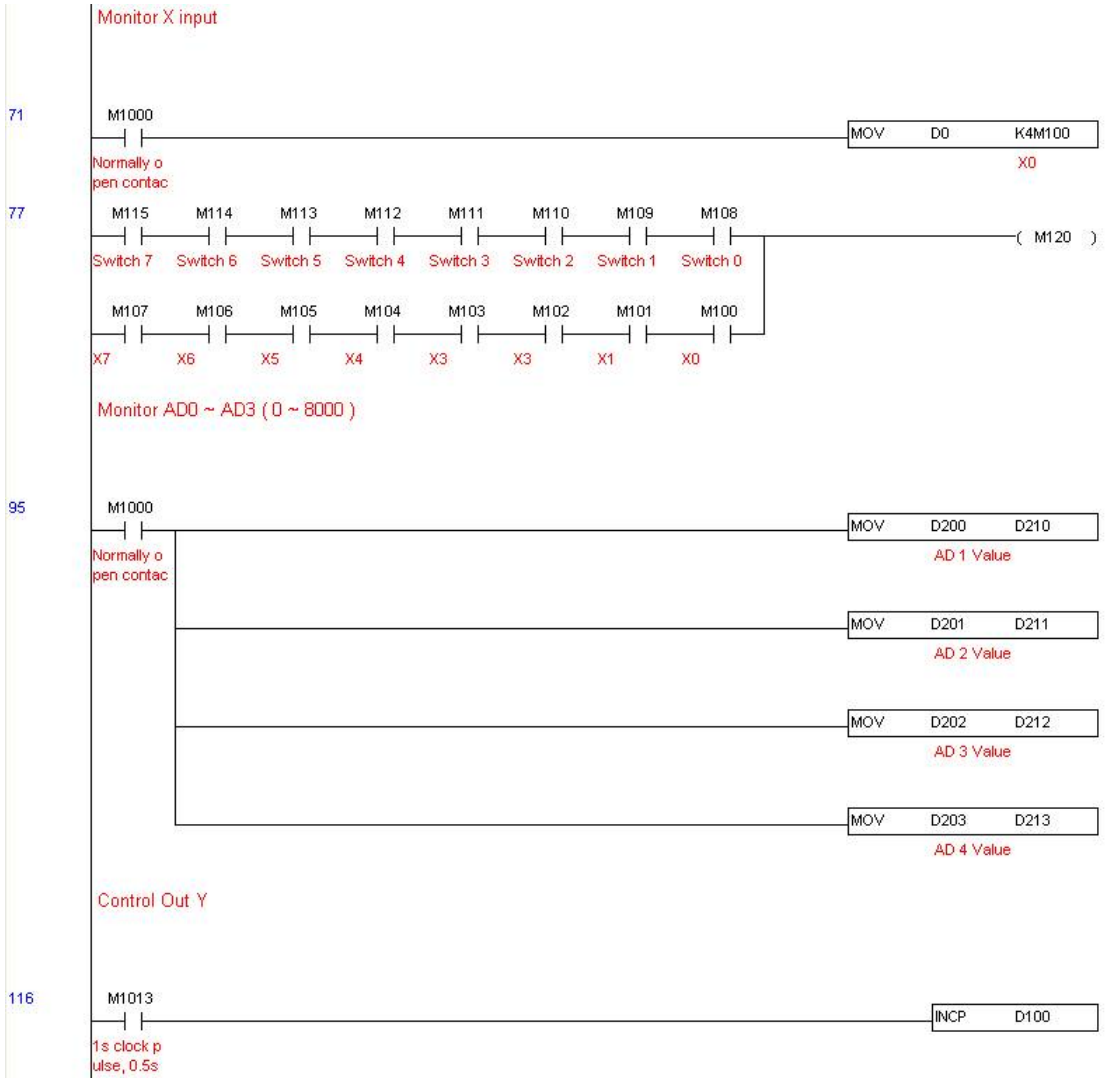
Monitor X input
71
M1000
Normally o
pen contac
MOV D0 K4M100
X0
77
M115 M114 M113 M112 M111 M110 M109 M108
Switch 7 Switch 6 Switch 5 Switch 4 Switch 3 Switch 2 Switch 1 Switch 0
(M120)
M107 M106 M105 M104 M103 M102 M101 M100
X7 X6 X5 X4 X3 X3 X1 X0
Monitor AD0 ~ AD3 (0 ~ 8000)
95
M1000
Normally o
pen contac
MOV D200 D210
AD 1 Value
MOV D201 D211
AD 2 Value
MOV D202 D212
AD 3 Value
MOV D203 D213
AD 4 Value
Control Out Y
116
M1013
1s clock p
ulse, 0.5s
INCP D100

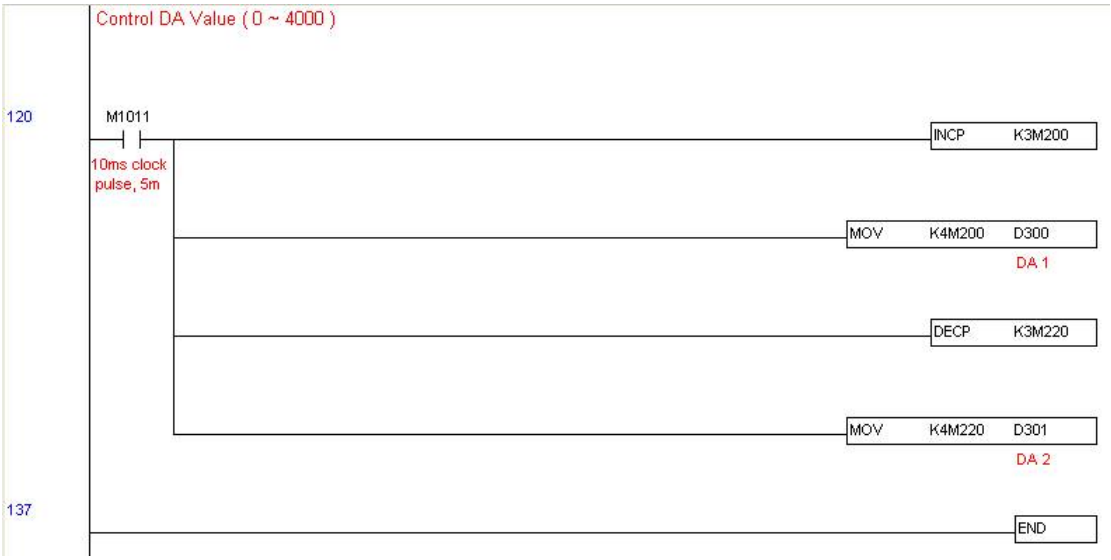
Control DA Value (0 ~ 4000)
120
M1011
10ms clock
pulse, 5m
INCP K3M200
MOV K4M200 D300
DA 1
DECP K3M220
MOV K4M220 D301
DA 2
137
END

Step 5: Actual testing situation:

I/O testing: When the switch is activated, it can be discovered that the display corresponds to M115 - M108. Furthermore, it can be seen that one output point light is added every 1 sec. (the display uses a binary format)

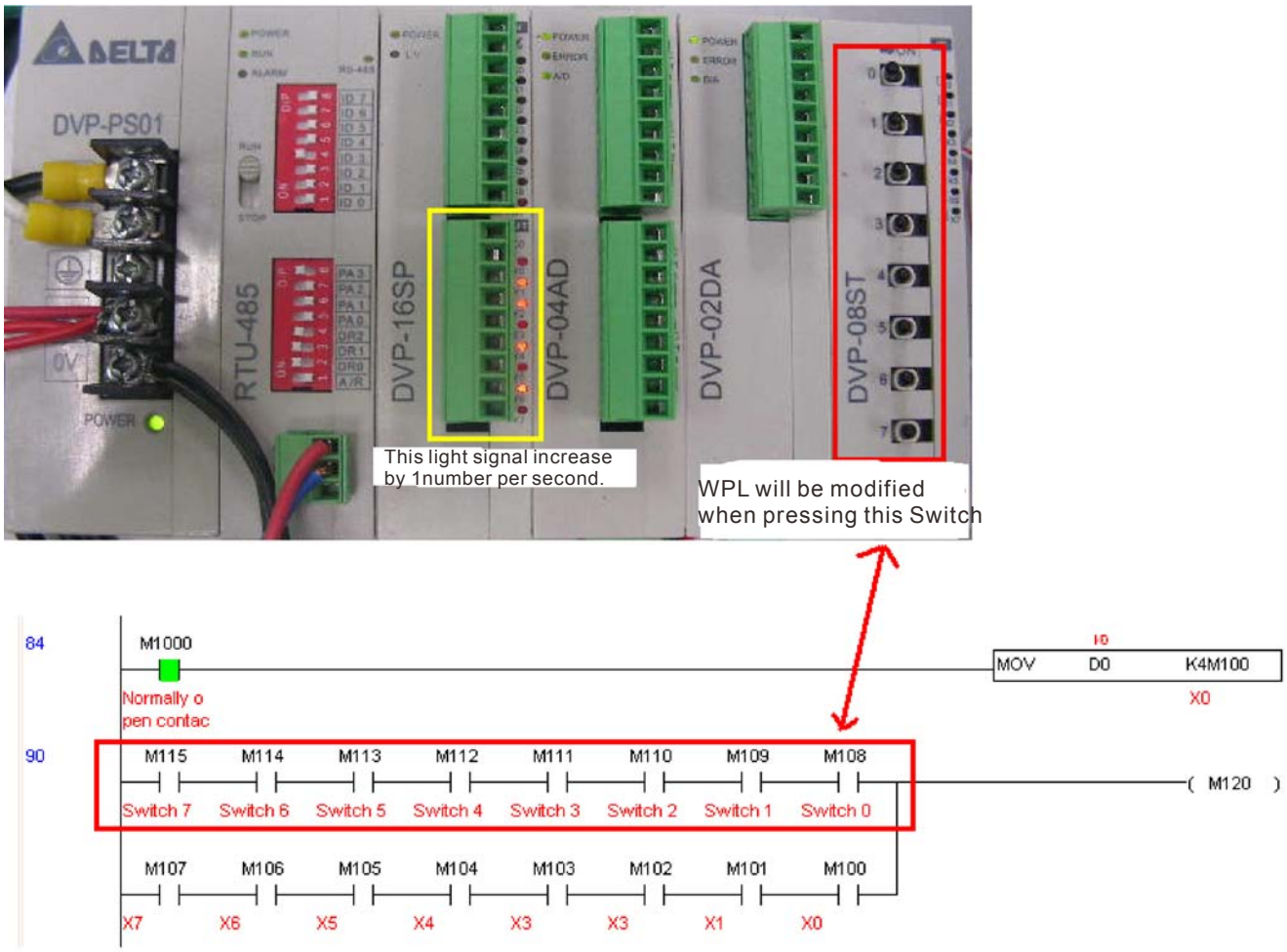

AD DA testing: It can be discovered that D200 and D201 are roughly twice the D300, and continue to increase progressively. For their part, the D202 and D203 are roughly twice the D301, and continue to decrease progressively.

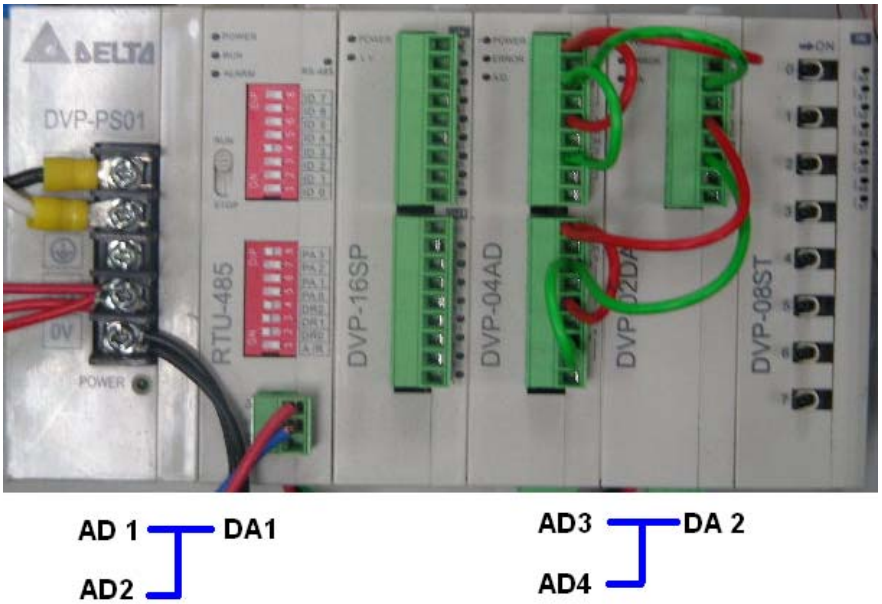

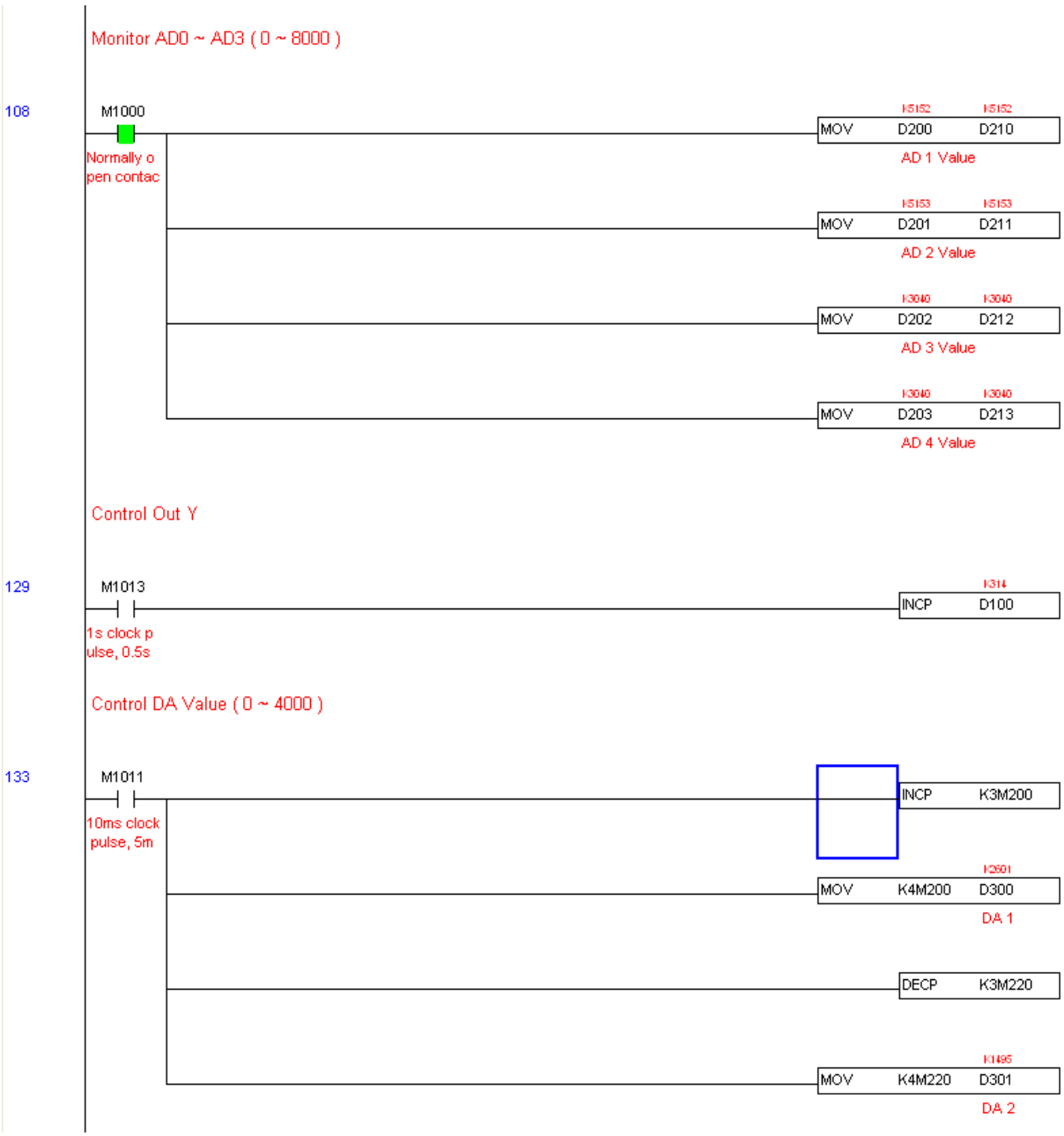
Monitor AD0 ~ AD3 (0 ~ 8000)
108
M1000
Normally o
pen contac
K5152 K5152
MOV D200 D210
AD 1 Value
K5153 K5153
MOV D201 D211
AD 2 Value
K3040 K3040
MOV D202 D212
AD 3 Value
K3040 K3040
MOV D203 D213
AD 4 Value
Control Out Y
129
M1013
1s clock p
ulse, 0.5s
K314
INCP D100
Control DA Value (0 ~ 4000)
133
M1011
10ms clock
pulse, 5m
INCP K3M200
K2501
MOV K4M200 D300
DA 1
DECP K3M220
K1495
MOV K4M220 D301
DA 2

16-13 Calendar functions

The C2000's internal PLC includes calendar functions, but these may only be used when a keypad (KPC-CC01) is connected, and otherwise cannot be used. Currently-support commands include TCMP (comparison of calendar data), TZCP (calendar data range comparison), TADD (calendar data addition), TSUB (calendar data subtraction), and TRD (calendar reading). Please refer to the explanation of relevant commands and functions for the usage of these commands.

In real applications, the internal PLC can judge whether calendar function have been activated; if they have been activated, calendar warning codes may be displayed in some situations. The basis for whether a calendar function has been activated is whether the program has written the calendar time (D1063 to D1069) in connection with the foregoing calendar commands or programs.

The calendar's time display is currently assigned to D1063 to D1069, and is defined as follows:

Special D	Item	Content	Attributes
D1063	Year (Western)	20xx (2000~2099)	RO
D1064	Weeks	1~7	RO
D1065	Month	1~12	RO
D1066	Day	1~31	RO
D1067	Hour	0~23	RO
D1068	Minute	0~59	RO
D1069	Second	0~59	RO

Calendar-related special M items are defined as follows:

Special D	Item	Attributes
M1068	Calendar time error	RO
M1076	Calendar time error or refresh time out	RO
M1036	Ignore calendar warning	RW

*When a program writes to the commands TCMP, TZCP, TADD, or TSUB, if it is discovered that a value exceeds the reasonable range, M1026 will be 1.

*When the keypad display is PLra (RTC correction warning) or PLrt (RTC time out warning), M1076 will be ON.

*When M1036 is 1, the PLC will ignore the calendar warning.

Calendar trigger warning code is defined as follows:

Warning	Description	Reset approach	Whether it affects PLC operation
PLra	Calendar time correction	Requires power restart	Will not have any effect
PLrt	Calendar time refresh time out	Requires power restart	Will not have any effect

*When the PLC's calendar functions are operating, if the keypad is replaced with another keypad, it will jump to PLra.

*When it is discovered at startup that the keypad has not been powered for more than 7 days, or the time is wrong, PLra will be triggered.

*When it is discovered that the C2000 has no keypad 10 sec. after startup, PLrt will be triggered.

*If the keypad is suddenly pulled out while the calendar is operating normally, and is not reconnected for more than 1 minute, PLrt will be triggered.

Practical applications:

We will perform a demo of simple applications.

We first correct the keypad time. After pressing Menu on the keypad, select the 9th time setting option. After selection, set the current time.

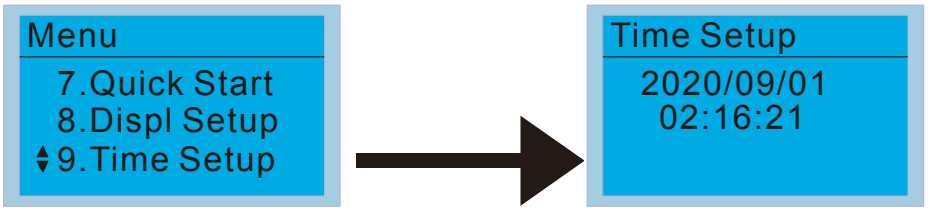

We set converter on during the period of 8:00-17:20, which allows us to write the following example

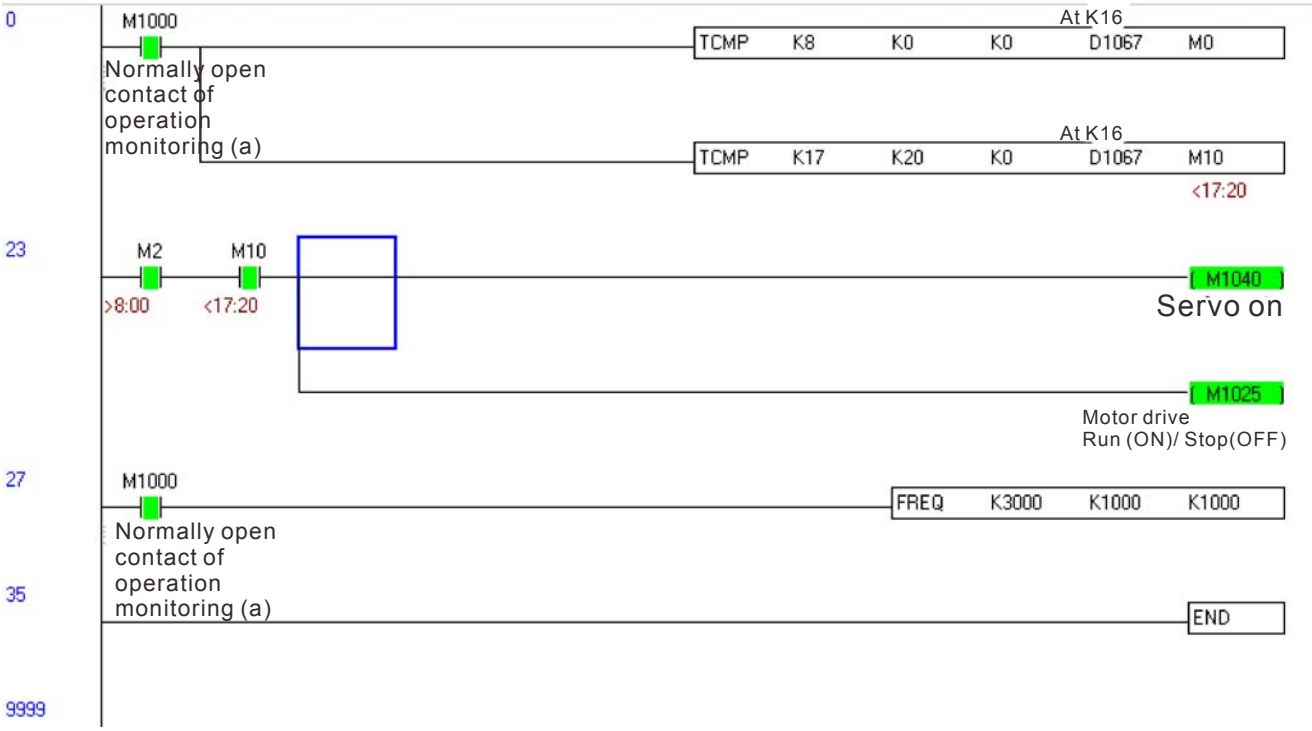

Chapter 17 Safety Torque Off Function

17-1 The drive safety function failure rate

17-2 Safety torque off terminal function description

17-3 Wiring diagram

17-4 Parameter

17-5 Operating sequence description

17-6 New error code for STO function

17-1 The drive safety function failure rate

Item	Definition	Standard	Performance
SFF	Safe Torque Off	IEC61508	Channel 1: 80.08% Channel 2: 68.91%
HFT (Type A subsystem)	Hardware Fault Tolerance	IEC61508	1
SIL	Safety Integrity Level	IEC61508	SIL 2
		IEC62061	SILCL 2
PFH	Average frequency of dangerous failure [h-1]	IEC61508	9.56×10^{-10}
PFD_{av}	Probability of Dangerous Failure on Demand	IEC61508	4.18×10^{-6}
Category	Category	ISO13849-1	Category 3
PL	Performance level	ISO13849-1	d
$MTTF_d$	Mean time to dangerous failure	ISO13849-1	High
DC	Diagnostic coverage	ISO13849-1	Low

17-2 Safety Torque Off terminal function description

The safety Torque Off function is to cut off the power supply to motor through the hardware,

thereby the motor couldn't produce torque.

The safety Torque Off function is respectively by two independent hardware to control the motor current drive signal, and thus cut off the inverter power module output in order to achieve the status of safety stop.

Operation principle Description as below table 1:

Table 1: Terminal operation description

Signal	Channel	Photo-coupler status			
STO signal	STO1~SCM1	ON(High)	ON(High)	OFF(Low)	OFF(Low)
	STO2~SCM2	ON(High)	OFF(Low)	ON(Low)	OFF(Low)
Driver Output status		Ready	STL2 mode (Torque output off)	STL1 mode (torque output off)	STO mode (Torque output off)

- 🕮 STO means Safe Torque Off
- 🕮 STL1~STL3 means Safety Torque Off hardware abnormal.
- 🕮 STL3 means STO1~SCM1 and STO2~SCM2 internal circuit detected abnormal.
- 🕮 STO1~SCM1 ON(High): means STO1~SCM1has connect to a +24VDC power supply.
- 🕮 STO2~SCM2 ON(High): means STO2~SCM2 has connect to a +24V power supply.
- 🕮 STO1~SCM1 OFF(Low): means STO1~SCM1hasn't connect to a +24VDC power supply.
- 🕮 STO2~SCM2 OFF(Low): means STO2~SCM2hasn't connect to a +24VDC power supply.

17-3 Wiring diagram

17-3-1Internal STO circuit as below:

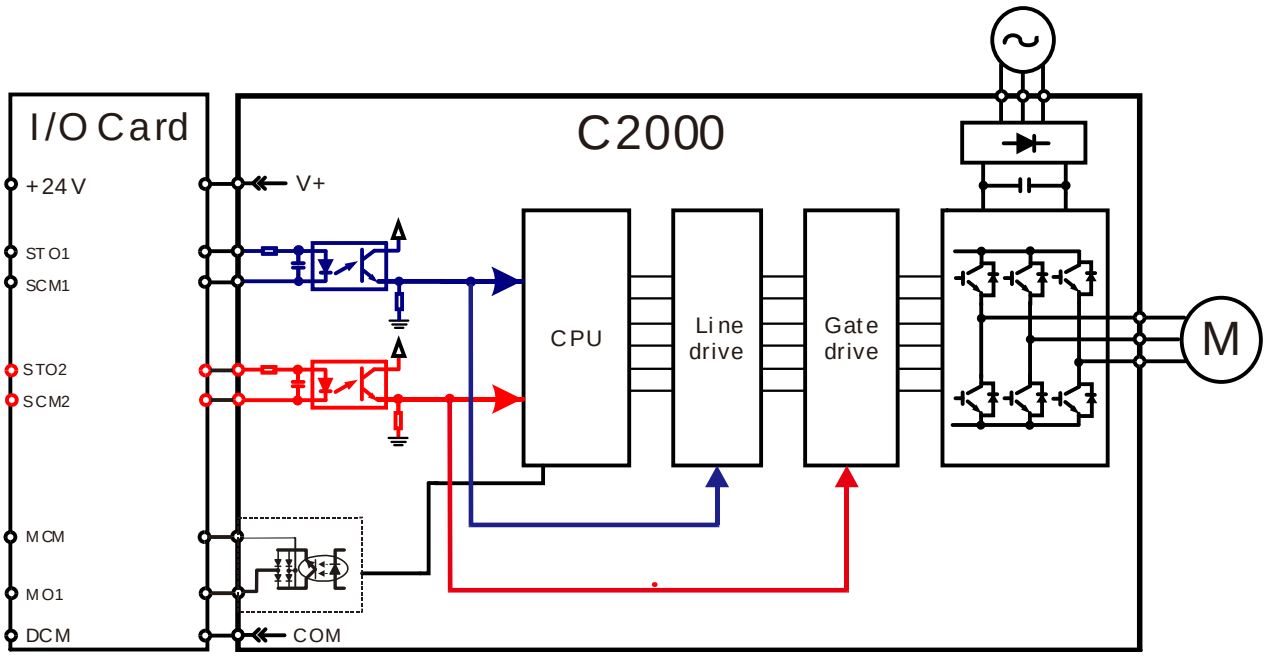

17-3-2 In the figure below, the factory setting for +24V-STO1-STO2 and SCM1-SCM2-DCM is short circuit:

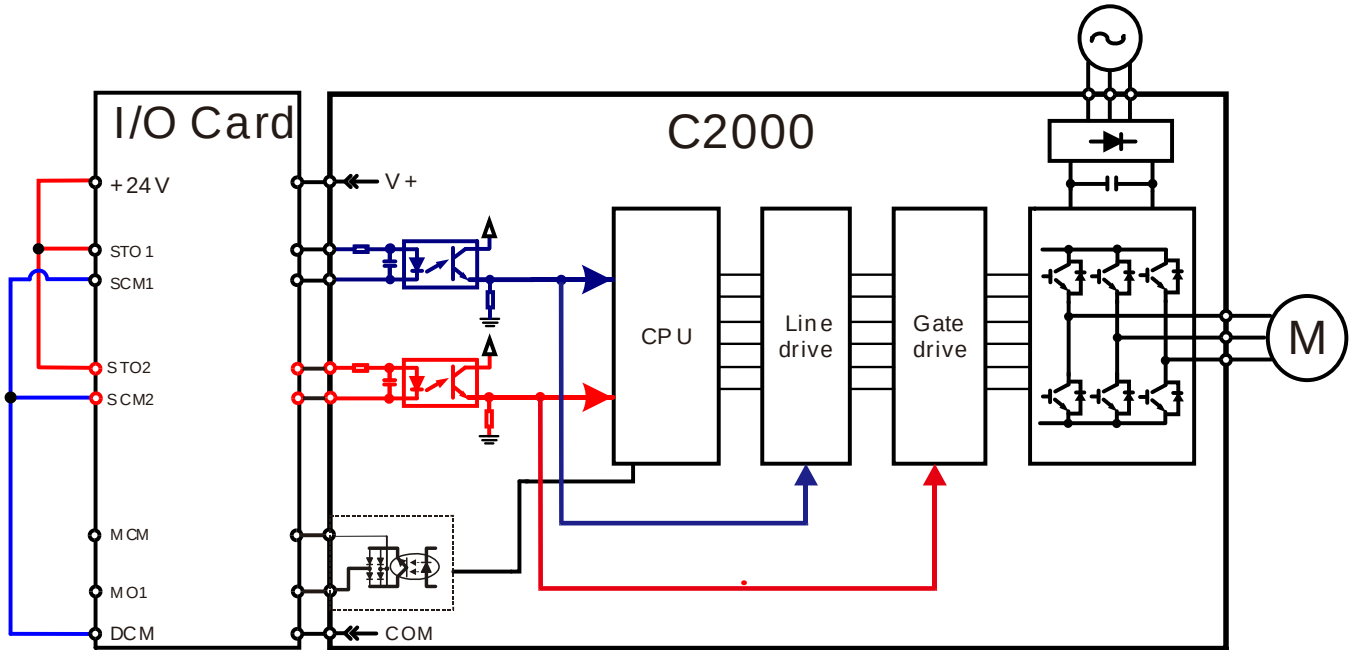

17-3-3 The control loop wiring diagram:

1. Remove the shot-circuit of +24V-STO1-STO2 and DCM-SCM1-SCM2.
2. The wiring as below diagram. The ESTOP switch must at Close status in normal situation and drive will be able to Run.
3. STO mode, switch ESTOP open. Drive output stop and keypad display STO.

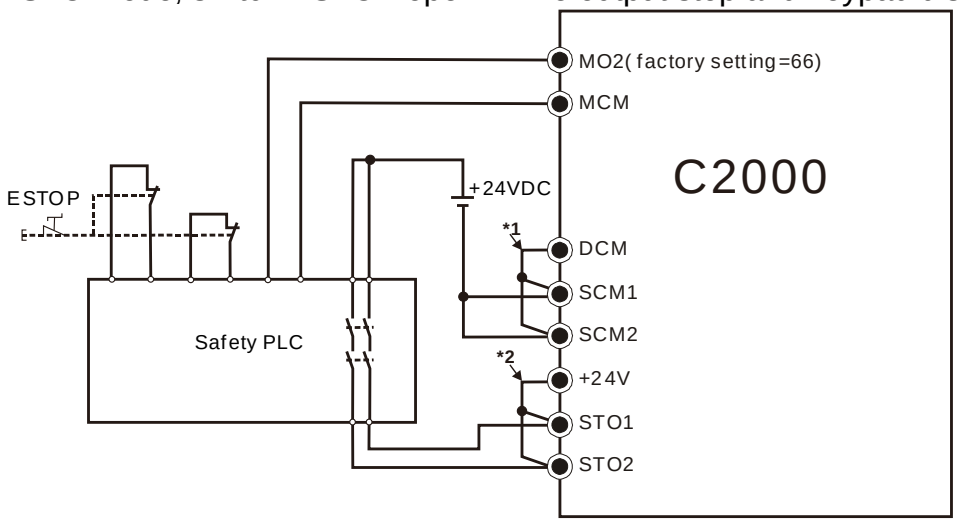

NOTE

*1: factory short circuit of DCM-SCM1-SCM2. To use the Safety function, please remove this short circuit

*2: factory short circuit of +24V-STO1-STO2. to use the Safety function, please remove this short circuit.

17-4 Parameters

✓	06-44	STO Alarm Latch						
								Factory setting: 0
		Settings	0：STO Alarm Latch					
			1：STO Alarm no Latch					

- Pr06-44=0 STO Alarm Latch: after the reason of STO Alarm is cleared, a Reset command is need to clear STO Alarm.
- Pr06-44=1 STO Alarm no Latch: after the reason of STO Alarm is cleared, the STO Alarm will be cleared automatically.
- All of STL1~STL3 error are “Alarm latch” mode (in STL1~STL3 mode, the Pr06-44 function is no effective).

✓	02-13	Multi-function Output 1 (Relay1)						
								Factory Setting:11
✓	02-14	Multi-function Output 2 (Relay2)						
								Factory Setting:1
✓	02-16	Multi-function Output 3 (MO1)						
								Factory Setting:0
✓	02-17	Multi-function Output 4 (MO2)						
								Factory Setting:66
		Settings						
		66: SO N.O. output						
		68: SO N.C. output						

Settings	Functions	Descriptions
66	SO Logic A output	Safety Output Normal Open
68	SO Logic B output	Safety Output Normal Close

📖 C2000 factory setting Pr02-17(MO2)=66(N.O.) and Multi-function Output setting item has add 2 new function: 66 and 68.

Drive status	Safety Output status	
	N.O. (MO=66)	N.C. (MO=68)
Normal run	Open	Close
STO	Close	Open
STL1~STL3	Close	Open

	00-04	Content of Multi-function Display						
								Factory setting: 3
		Settings	45: Hardware version					

00-04=45	Hardware version

17-5 Operating sequence description

17-5-1Normal operation status

As shown in Figure 3: When the STO1~SCM1 and STO2~SCM2=ON (no STO function is need), the drive will execute “Operating” or “Output Stop” according to RUN/STOP command.

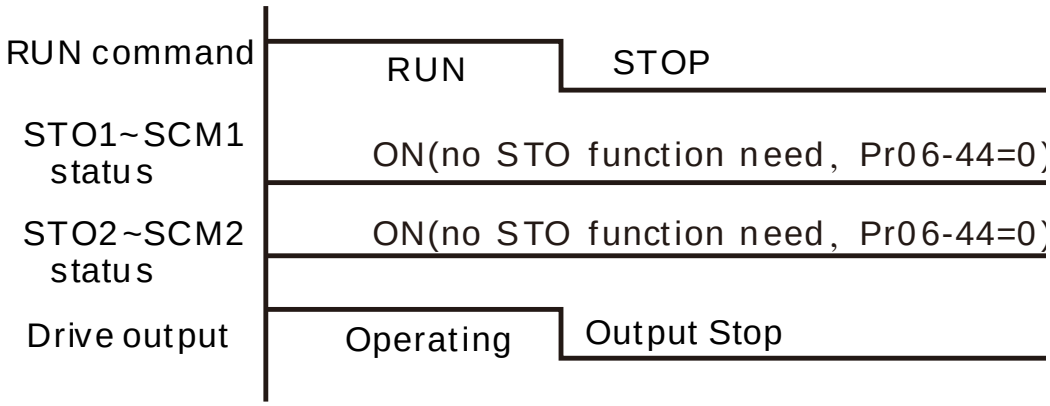

Figure 3

17-5-2-1 STO，Pr06-44=0，Pr02-35=0

As shown in Figure 4: When both of STO1~SCM1 and STO2~SCM2 channel has turn off during operating, the STO function enabling and the drive will stop output regardless of Run command is ON or OFF status.

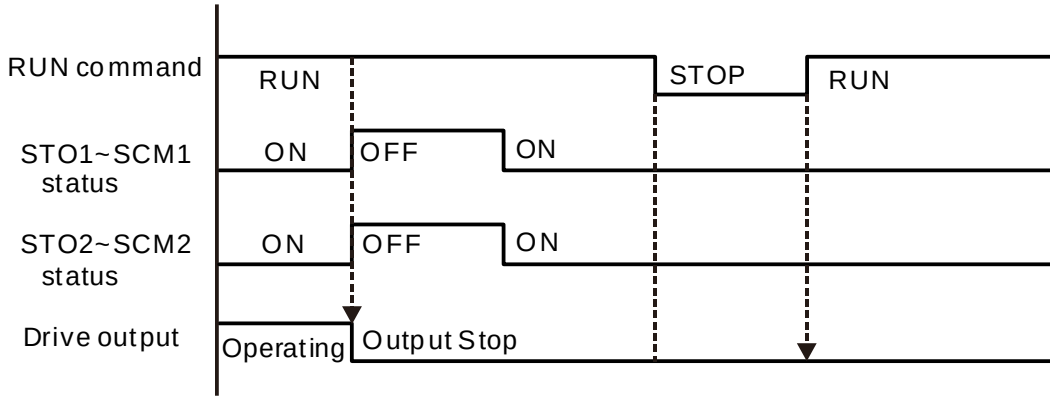

Figure 4

17-5-2-2 STO，Pr06-44=0，Pr02-35=1

As shown in Figure 5: As same as the figure 4. But, because the Pr02-35=1, therefore, after the Reset command, if the operating command still exists, then the drive will immediately execute the run command again.

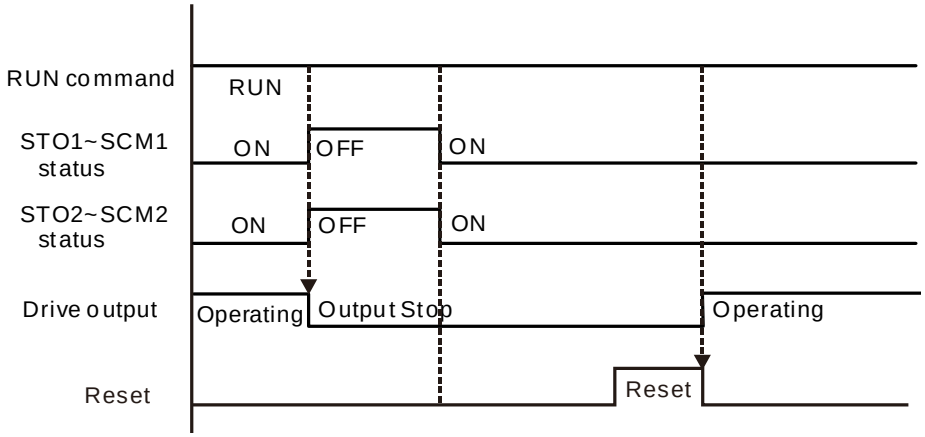

Figure 5

17-5-3 STO，Pr06-44=1

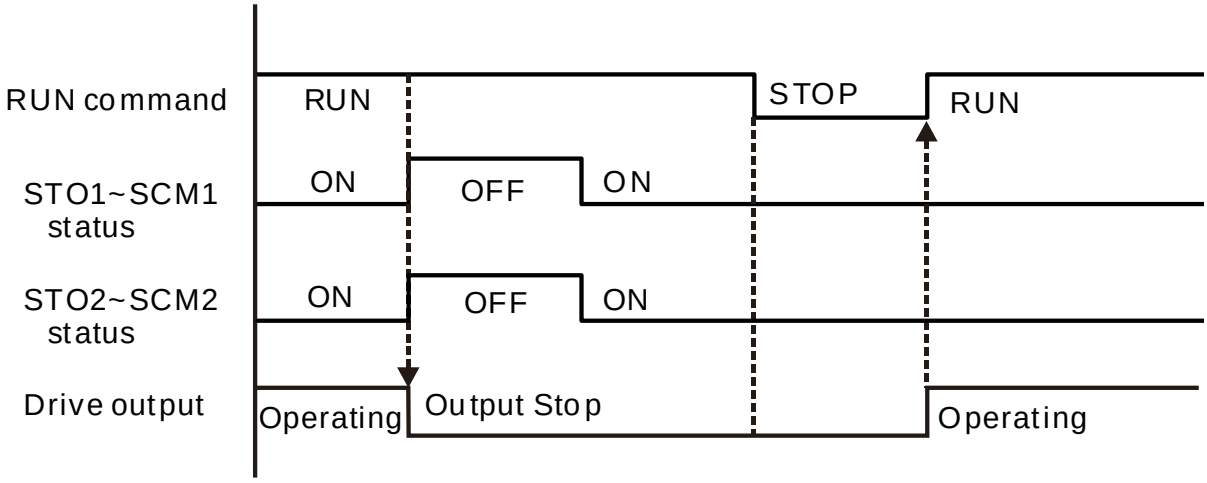

Figure 6

17-5-4 STL1

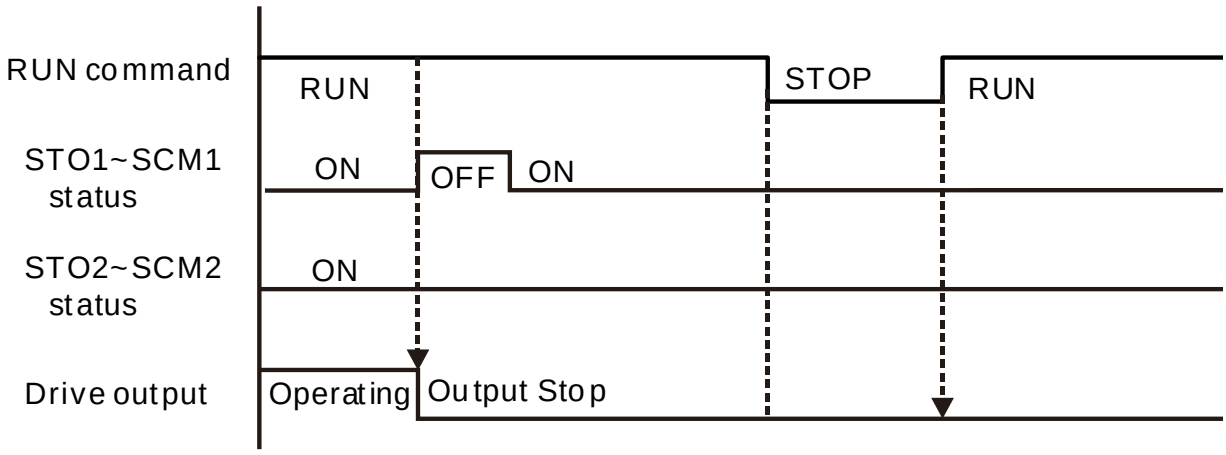

Figure 7

17-5-4 STL2

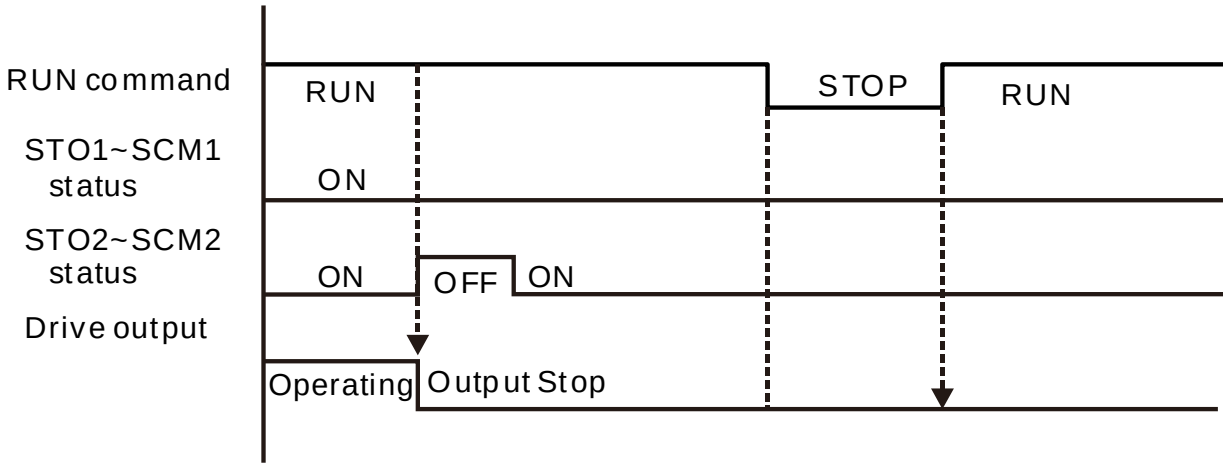

Figure 8

17-6 New Error code for STO function

	06-17	Present Fault Record					
	06-18	Second Most Recent Fault Record					
	06-19	Third Most Recent Fault Record					
	06-20	Fourth Most Recent Fault Record					
	06-21	Fifth Most Recent Fault Record					
	06-22	Sixth Most Recent Fault Record					
		Settings					
		72：Channel 1(STO1~SCM1)internal hardware error					
		76：STO(Safety Torque Off					
		77：Channel 2(STO2~SCM2)internal hardware error					
		78：Channel 1 and Channel 2 internal hardware error					

Error code	Name	Description
76	STO	Safety Torque Off function active
72	STL1 (STO1~SCM1)	STO1~SCM1 internal hardware detect error
77	STL2 (STO2~SCM2)	STO2~SCM2 internal hardware detect error
78	STL3	STO1~SCM1 and STO2~SCM2 internal hardware detect error